ESX™-3000 Switch
Installation and Maintenance Manual

MANU0395-01 - Rev. A - 03/05/99

Software Version 6.0.x

FORE Systems, Inc.

1000 FORE Drive
Warrendale, PA 15086-7502
Phone: 724-742-4444
FAX: 724-742-7742

http://www.fore.com

Legal Notices

Copyright © 1999 FORE Systems, Inc. All rights reserved.

U.S. Government Restricted Rights. If you are licensing the Software on behalf of the U.S. Government ("Government"), the following provisions apply to you. If the Software is supplied to the Department of Defense ("DoD"), it is classified as "Commercial Computer Software" under paragraph 252.227-7014 of the DoD Supplement to the Federal Acquisition Regulations ("DFARS") (or any successor regulations) and the Government is acquiring only the license rights granted herein (the license rights customarily provided to non-Government users). If the Software is supplied to any unit or agency of the Government other than DoD, it is classified as "Restricted Computer Software" and the Government's rights in the Software are defined in paragraph 52.227-19 of the Federal Acquisition Regulations ("FAR") (or any successor regulations) or, in the cases of NASA, in paragraph 18.52.227-86 of the NASA Supplement to the FAR (or any successor regulations).

Printed in the USA.

No part of this work covered by copyright may be reproduced in any form. Reproduction, adaptation, or translation without prior written permission is prohibited, except as allowed under the copyright laws.

This publication is provided by FORE Systems, Inc. "as-is" without warranty of any kind, either express or implied, including, but not limited to, the implied warranties or conditions of merchantability or fitness for a particular purpose. FORE Systems, Inc. shall not be liable for any errors or omissions which may occur in this publication, nor for incidental or consequential damages of any kind resulting from the furnishing, performance, or use of this publication.

Information published here is current or planned as of the date of publication of this document. Because we are improving and adding features to our products continuously, the information in this document is subject to change without notice.

RESTRICTED RIGHTS LEGEND. Use, duplication, or disclosure by the government is subject to restrictions as set forth in subparagraph (c)(1)(ii) of the Rights in Technical Data and Computer Software clause at DFARS 252.227-7013 (October 1988) and FAR 52.227-19 (June 1987).

The VxWorks software used in the Mini Loader is licensed from Wind River Systems, Inc., Copyright ©1984-1996.

TRADEMARKS

FORE Systems, AVA, *ForeRunner*, *ForeThought*, *ForeView*, and *PowerHub* are registered trademarks of FORE Systems, Inc. All Roads Lead To ATM, ASN, ATV, *CellChain*, *CellPath*, *CellStarter*, *EdgeRunner*, *FramePlus*, *ForeRunnerHE*, *ForeRunnerLE*, Intelligent Infrastructure, I2, MSC, NetPro, Networks Of Steel, *StreamRunner*, TNX, Universal Port, *VoicePlus*, and Zero Hop Routing are unregistered trademarks of FORE Systems, Inc. All other brands or product names are trademarks or registered trademarks of their respective holders.

FCC CLASS A NOTICE

WARNING: Changes or modifications to this unit not expressly approved by the party responsible for compliance could void this user's authority to operate this equipment.

NOTE: The *ESX*-3000 has been tested and found to comply with the limits for a Class A digital device, pursuant to Part 15 of the FCC Rules. These limits are designed to provide reasonable protection against harmful interference when the equipment is operated in a commercial environment. This equipment generates, uses, and can radiate radio frequency energy and, if not installed and used in accordance with the instruction manual, may cause harmful interference to radio communications. Operation of the equipment in a residential area is likely to cause harmful interference in which case the user will be required to correct the interference at his own expense.

DOC CLASS A NOTICE

This digital apparatus does not exceed Class A limits for radio noise emission for a digital device as set out in the Radio Interference Regulations of the Canadian Department of Communications.

Le present appareil numerique n'emet pas de bruits radioelectriques depassant les limites applicables aux appareils numeriques de la class A prescrites dans le reglement sur le brouillage radioelectrique edicte par le ministere des Communications du Canada.

CE NOTICE

Marking by the symbol **CE** indicates compliance of this system to the EMC (Electromagnetic Compatibility) directive of the European Community and compliance to the Low Voltage (Safety) Directive. Such marking is indicative that this system meets or exceeds the following technical standards:

- EN 55022 - "Limits and Methods of Measurement of Radio Interference Characteristics of Information Technology Equipment."
- EN 50082-1 - "Electromagnetic compatibility - Generic immunity standard Part 1: Residential, commercial, and light industry."
- IEC 1000-4-2 - "Electromagnetic compatibility for industrial-process measurement and control equipment Part 2: Electrostatic discharge requirements."
- IEC 1000-4-3 - "Electromagnetic compatibility for industrial-process measurement and control equipment Part 3: Radiate electromagnetic field requirements."
- IEC 1000-4-4 - "Electromagnetic compatibility for industrial-process measurement and control equipment Part 4: Electrical fast transient/burst requirements."

VCCI CLASS A NOTICE

この装置は、情報処理装置等電波障害自主規制協議会（ＶＣＣＩ）の基準に基づくクラスＡ情報技術装置です。この装置を家庭環境で使用すると電波妨害を引き起こすことがあります。この場合には使用者が適切な対策を講ずるよう要求されることがあります。

This is a Class A product based on the standard of the Voluntary Control Council for Interference by Information Technology Equipment (VCCI). If this equipment is used in a domestic environment, radio disturbance may arise. When such trouble occurs, the user may be required to take corrective actions.

AUSTRALIA EMC COMPLIANCE

This product has been tested and found to comply with the Class A electromagnetic compatibility limits specified in AS/NZ 3548.

SAFETY CERTIFICATIONS

ETL certified to meet Information Technology Equipment safety standards UL 1950, CSA 22.2 No. 950, and EN 60950.

Table of Contents

Chapter Summaries i
Technical Support ii
Typographical Styles iii
Important Information Indicators iv
Laser Warning v

CHAPTER 1 Hardware Overview

1.1 Switch Hardware Configuration . . . . . 1 - 2
1.2 Hardware Components . . . . . 1 - 3
1.2.1 Switch Control Processor/Fabric Module . . . . . 1 - 3
1.2.1.1 Display LED . . . . . 1 - 5
1.2.1.2 10 Gbps and 20 Gbps LEDs . . . . . 1 - 6
1.2.1.3 RESET Button . . . . . 1 - 6
1.2.1.4 NEXT/SELECT Rocker Switch . . . . . 1 - 6
1.2.1.5 RS-232 Serial Port . . . . . 1 - 7
1.2.1.6 10/100BaseT Ethernet Port . . . . . 1 - 8
1.2.1.7 Ejection/Insertion Levers . . . . . 1 - 8
1.2.2 Fan Tray . . . . . 1 - 8
1.2.3 Power Supply Modules . . . . . 1 - 9
1.2.3.1 AC Power Supply LEDs . . . . . 1 - 11
1.2.3.2 AC Shutdown Conditions . . . . . 1 - 12
1.2.4 Cable Management System . . . . . 1 - 13

CHAPTER 2 Hardware Installation/Initial Configuration

2.1 Site Preparation . . . . . 2 - 2
2.1.1 Footprint . . . . . 2 - 2
2.1.2 Rack Requirements . . . . . 2 - 3
2.1.3 Operating Environment Requirements . . . . . 2 - 3
2.1.4 Physical Location Considerations . . . . . 2 - 4
2.1.5 Power Requirements and Electrical Precautions . . . . . 2 - 5
2.1.6 Safety Precautions . . . . . 2 - 6
2.2 Unpacking and Checking Equipment . . . . . 2 - 7
2.3 Rack Mounting the *ESX*-3000 . . . . . 2 - 8
2.3.1 Rack Mount Installation Tips and Requirements . . . . . 2 - 9
2.3.2 Cabinet Mounting the *ESX*-3000 . . . . . 2 - 10
2.3.3 Front Mounting the *ESX*-3000 . . . . . 2 - 13

2.4 Installing the Cable Management System . . . . . 2 - 16
2.4.1 Installing the Cable Combs . . . . . 2 - 16
2.4.2 Installing the Port Card Cable Hangers . . . . . 2 - 16
2.5 Connecting a Terminal . . . . . 2 - 17
2.6 Powering Up the Switch . . . . . 2 - 18
2.6.1 Connecting to AC Power . . . . . 2 - 18
2.7 Modem Configuration . . . . . 2 - 20
2.7.1 Modem Parameters . . . . . 2 - 20
2.8 Configuring IP Addresses . . . . . 2 - 21
2.8.1 Overview of IP Addressing . . . . . 2 - 21
2.8.1.1 Logical IP Subnets . . . . . 2 - 21
2.8.1.2 Network Classes . . . . . 2 - 22
2.8.2 Configuring Ethernet IP . . . . . 2 - 22
2.8.3 Configuring FORE IP . . . . . 2 - 23
2.8.4 Configuring Classical IP . . . . . 2 - 23
2.8.4.1 Configuring the ARP Server . . . . . 2 - 24
2.8.5 Configuring LAN Emulation . . . . . 2 - 24
2.8.6 Configuring IP Routes . . . . . 2 - 25
2.8.7 Subsequent Operation . . . . . 2 - 26

CHAPTER 3 Hardware Maintenance

3.1 SCP/Fabric Module Replacement . . . . . 3 - 1
3.2 Port Card Replacement . . . . . 3 - 3
3.3 Power Supply Module Replacement . . . . . 3 - 5
3.3.1 Hot-Swapping an AC Power Supply Module . . . . . 3 - 5
3.4 Fan Tray Replacement . . . . . 3 - 7

CHAPTER 4 Software Upgrade Instructions

4.1 Obtaining the Software Upgrade File via FTP . . . . . 4 - 2
4.2 Requirements for Upgrading with the Mini Loader . . . . . 4 - 5
4.2.1 Downloading the Mini Loader Software . . . . . 4 - 5
4.2.2 Emptying the FLASH . . . . . 4 - 6
4.2.3 Upgrading the Switch to the Mini Loader . . . . . 4 - 6
4.2.4 Deleting the Active Switch Software . . . . . 4 - 8
4.3 Performing the Software Upgrade . . . . . 4 - 9
4.3.1 Upgrading the Software Using TFTP . . . . . 4 - 9
4.3.2 Upgrading the Software Using FTP . . . . . 4 - 12
4.4 Changing between Multiple Versions of Software . . . . . 4 - 15

4.5 Booting and Upgrading with the Mini Loader . . . . . 4 - 17
4.5.1 Setting the IP Address of the Switch . . . . . 4 - 20
4.5.2 Setting the Gateway Address . . . . . 4 - 20
4.5.3 Performing the Upgrade . . . . . 4 - 21
4.6 Using Bootp to Download Software to the Switch . . . . . 4 - 23
4.6.1 Bootp Overview . . . . . 4 - 24
4.6.2 Setting Up a bootp Server . . . . . 4 - 24
4.6.3 Adding a Switch Entry in the bootptab File. . . . . 4 - 25
4.6.4 Setting Up a TFTP Server . . . . . 4 - 27

APPENDIX A Hardware Specifications

A.1 *ESX*-3000 Specifications . . . . . A - 1
A.2 *ESX*-3000 ATM Port Cards . . . . . A - 3
A.2.1 622 Mbps OC-12c/STM-4c MM Port Cards . . . . . A - 4
A.2.2 622 Mbps OC-12c/STM-4c SM Port Card . . . . . A - 5
A.2.3 622 Mbps OC-12c/STM-4c SM/OC-12c/STM-4c MM Port Card . . . . . A - 6
A.2.4 155 Mbps OC-3c/STM-1 MM Port Card . . . . . A - 8
A.2.5 155 Mbps STS-3c/STM-1 UTP Port Card . . . . . A - 9

List of Figures

CHAPTER 1 Hardware Overview

Figure 1.1 Fully Configured, Rack-Mounted *ESX*-3000 with AC Power Supplies . . . . . 1 - 2
Figure 1.2 SCP/Fabric Module . . . . . 1 - 3
Figure 1.3 SCP Front Panel . . . . . 1 - 4
Figure 1.4 RS-232 Serial Port Pinouts on an SCP . . . . . 1 - 7
Figure 1.5 Ethernet Port and LEDs . . . . . 1 - 8
Figure 1.6 Front Panel of an AC Power Supply Module . . . . . 1 - 10
Figure 1.7 *ESX*-3000 Cable Management System . . . . . 1 - 13

CHAPTER 2 Hardware Installation/Initial Configuration

Figure 2.1 *ESX*-3000 Measurements . . . . . 2 - 2
Figure 2.2 Cabinet Shelf . . . . . 2 - 9
Figure 2.3 Front Panel to Shelf Assembly with Cable Clamps Attached . . . 2 - 10
Figure 2.4 Attaching Shelf Assembly to Front Cabinet Enclosure . . . . . 2 - 11
Figure 2.5 Attaching Shelf Angles to Rear Cabinet Enclosure . . . . . 2 - 11
Figure 2.6 Secure Cabinet Shelf Assembly to Shelf Angles . . . . . 2 - 12
Figure 2.7 Front Panel to Shelf Assembly with Cable Clamps Attached . . . 2 - 13
Figure 2.8 Attaching Cabinet Shelf Assembly to Front Cabinet Enclosure . 2 - 14
Figure 2.9 Attaching Shelf Supports to Front Rails . . . . . 2 - 14
Figure 2.10 Cable Comb . . . . . 2 - 16
Figure 2.11 Port Card Cable Hanger . . . . . 2 - 16
Figure 2.12 Serial Port Pinouts . . . . . 2 - 17

CHAPTER 3 Hardware Maintenance

Figure 3.1 SCP/Fabric Module Removal . . . . . 3 - 2
Figure 3.2 Removing a Port Card from the Slot . . . . . 3 - 4
Figure 3.3 Removing a Power Supply Module . . . . . 3 - 6
Figure 3.4 Rear View of Fan Tray . . . . . 3 - 7

CHAPTER 4 Software Upgrade Instructions

Figure 4.1 Example of Switch and Host on Different Subnets . . . . . 4 - 20

Preface

This manual provides the technical information needed to install the *ESX*™-3000 switch and the accompanying *ForeThought*™ software. This document also provides safety instructions and general product information. This document was created for users with various levels of experience. If you have any questions or problems with the installation, please contact FORE Systems' Technical Assistance Center (TAC).

Chapter Summaries

Chapter 1 - Hardware Overview - Provides a description of the *ESX*-3000 hardware components.

Chapter 2 - Hardware Installation/Initial Configuration - Provides information for the hardware installation of the switch. Information regarding initial configuration of the switch is also provided.

Chapter 3 - Hardware Maintenance - Describes the hot-swap replacement procedures for the switch components.

Chapter 4 - Software Upgrade Instructions - Describes how to configure a TFTP server, upgrade switch software, and change between multiple versions of software.

Appendix A - Hardware Specifications - Provides cabling, hardware, and general operating specifications for the *ESX*-3000 switch and port cards.

Technical Support

In the U.S.A., customers can reach FORE Systems' Technical Assistance Center (TAC) using any one of the following methods:

1. Select the "Support" link from FORE's World Wide Web page:

   http://www.fore.com/

2. Send questions, via e-mail, to:

   support@fore.com

3. Telephone questions to "support" at:

   800-671-FORE (3673) or **724-742-6999**

4. FAX questions to "support" at:

   724-742-7900

Technical support for customers outside the United States should be handled through the local distributor or via telephone at the following number:

+1 724-742-6999

No matter which method is used to reach FORE Support, customers should be ready to provide the following:

- A support contract ID number
- The serial number of each product in question
- All relevant information describing the problem or question

Typographical Styles

Throughout this manual, all specific commands meant to be entered by the user appear on a separate line in bold typeface. In addition, use of the `Enter` or `Return` key is represented as `<ENTER>`. The following example demonstrates this convention:

`cd /usr <ENTER>`

File names that appear within the text of this manual are represented in the following style: "...the `fore_install` program installs this distribution."

Command names that appear within the text of this manual are represented in the following style: "...using the **`flush-cache`** command clears the bridge cache."

Subsystem names that appear within the text of this manual are represented in the following style: "...to access the **`bridge`** subsystem..."

Parameter names that appear within the text of this manual are represented in the following style: "...using *`<seg-list>`* allows you to specify the segments for which you want to display the specified bridge statistics."

Any messages that appear on the screen during software installation and network interface administration are shown in `Courier` font to distinguish them from the rest of the text as follows:

```
.... Are all four conditions true?
```

Important Information Indicators

To call your attention to safety and otherwise important information that must be reviewed to ensure correct and complete installation, as well as to avoid damage to the FORE Systems product or to your system, FORE Systems utilizes the following *WARNING/CAUTION/NOTE* indicators.

WARNING statements contain information that is critical to the safety of the operator and/or the system. Do not proceed beyond a **WARNING** statement until the indicated conditions are fully understood or met. This information could prevent serious injury to the operator, damage to the FORE Systems product, the system, or currently loaded software, and is indicated as follows:

WARNING!

Hazardous voltages are present. To reduce the risk of electrical shock and danger to personal health, follow the instructions carefully.

CAUTION statements contain information that is important for proper installation/operation. Compliance with **CAUTION** statements can prevent possible equipment damage and/or loss of data and are indicated as follows:

CAUTION

You risk damaging your equipment and/or software if you do not follow these instructions.

NOTE statements contain information that has been found important enough to be called to the special attention of the operator and is set off from the text as follows:

To ensure rack stability and enough clearance to install the switch in the rack, use the lowest rack position available.

Laser Warning

Every FORE Systems' port card having a single mode fiber optic interface contains a Class 1 laser.

Class 1 Laser Product:
This product conforms to applicable requirements of 21 CFR 1040 at the date of manufacture.

Class 1 lasers are defined as products which do not permit human access to laser radiation in excess of the accessible limits of Class 1 for applicable wavelengths and durations. These lasers are safe under reasonably foreseeable conditions of operation.

Single mode fiber optic port cards contain Class 1 lasers.

WARNING!

Do not stare into the beam or view these beams with optical instruments.

CHAPTER 1 Hardware Overview

This chapter provides an overview of the *ESX*-3000 switch. It identifies and provides basic information about each main hardware component. The components are detailed in the following subsections:

- **Section 1.2.1 -** Switch Control Processor / Fabric Module
- **Section 1.2.2 -** Fan Tray
- **Section 1.2.3 -** Power Supply Modules
- **Section 1.2.4 -** Cable Management System

NOTE The hardware components used in the *ESX*-3000 are specific to the switch and, therefore, do not operate in other *ForeRunner* switches.

NOTE For information about the technical and operating specifications for the *ESX*-3000, see Appendix A in this manual.

The *ESX*-3000 is a distributed, shared memory, output-buffered switch that delivers high-performance switching capacity and cost effective high-speed links to edge devices for backbones and internetworking applications. The *ESX*-3000 provides 10 Gbps (expandable to 20 Gbps with optional expansion module) of non-blocking switching capacity and supports 32 (8x4) OC-12 ports, 96 (12x8) OC-3 ports, or 128 (16x8) UTP ports. The switch control processor (SCP) / fabric module and port cards are fully interconnected utilizing a series of cell busses on the system backplane.

Interconnecting multiple FORE Systems' switches at various speeds is simple. Once a new switch is added to the network, all other switches recognize its presence and dynamically establish connections to ports on the new switch. Furthermore, scaling the network is accomplished without costly and time-consuming address reconfiguration and LAN segmentation.

1.1 Switch Hardware Configuration

The *ESX*-3000, as shown in Figure 1.1, is an 8-slot, chassis-based switch, designed to be supported by a shelf and rack-mounted in a standard 19" rack. A fully-configured switch supports up to two 10 Gbps fabrics joined by a PCI connector, eight ATM or Ethernet port cards, and a single fan tray. The switch is managed with a single Pentium-based SCP. Power is supplied by three AC load-sharing, N:1 redundant power modules. A cable management system helps to organize and protect the fiber cables. All components are accessible from either the front or rear of the chassis.

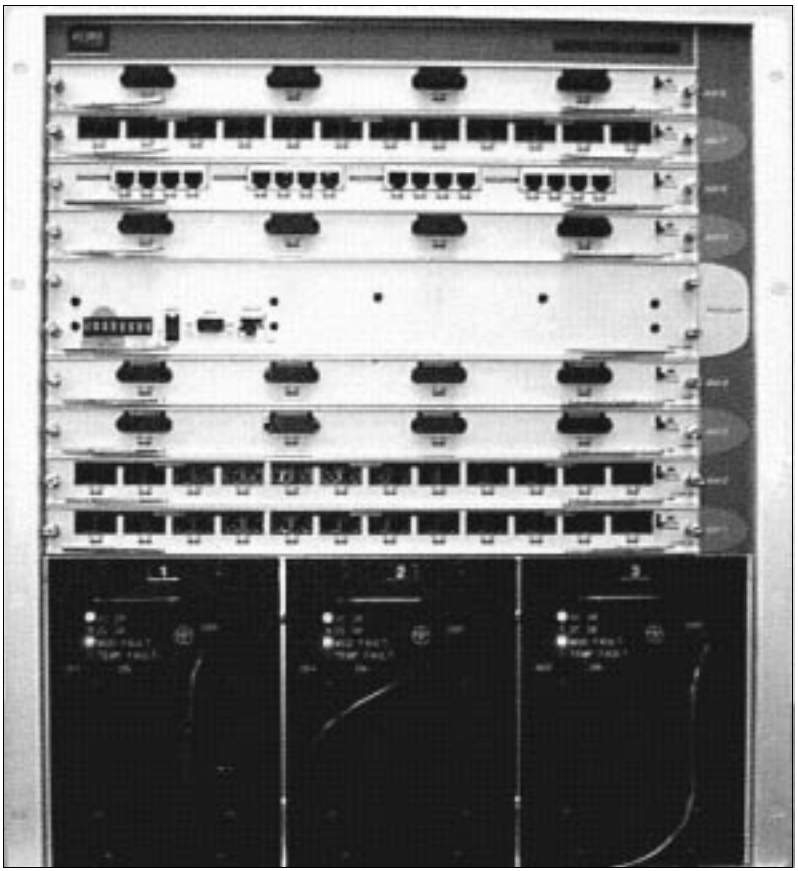

Figure 1.1 - Fully Configured, Rack-Mounted *ESX*-3000 with AC Power Supplies

1.2 Hardware Components

The switch chassis contains physically separate hardware components (SCP / fabric module and port cards) that work together to provide ATM switching capabilities, as well as distributed connection setup and management. A single fan tray provides air flow in the chassis. The power supply enclosure located at the bottom of the switch contains three AC power supply modules that provide power to the entire switch. All hardware components are attached directly to the system backplane and interconnected utilizing a series of cell busses. This provides inter-board communication between the SCP / fabric module, port cards, power supplies, and fan tray.

NOTE

The hardware components in the *ESX*-3000 are fully hot-swappable. For information about hot-swapping, refer to Chapter 3, ”Hardware Maintenance.”

The following subsections describe the individual hardware components that together make up the *ESX*-3000.

1.2.1 Switch Control Processor/Fabric Module

The *ESX*-3000 uses a centralized switch control processor (SCP) that controls and monitors the switch fabric and port cards. The switch fabric supports either 10Gbps or 20Gbps (available via an add-on board) non-blocking bandwidth indicated by the appropriate LED on the front panel. A single SCP / fabric module is supplied and installed in the *ESX*-3000.

The SCP / fabric module is illustrated in Figure 1.2.

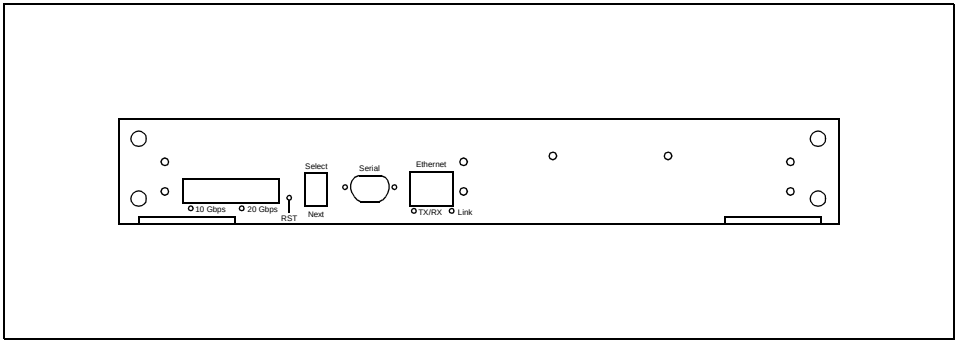

Figure 1.2 - SCP / Fabric Module

The SCP consists of a single board computer (SBC) and an interface module to mechanically and electrically adapt the SBC to the backplane. The SCP features the following:

- 200MHz Pentium processor
- 512k L2 cache
- 128 MB DRAM
- 20 MB of FLASH
- 32-bit, 33 MHz PCI bus

The *ESX*-3000 can contain up to two switch fabrics, each providing 10 Gbps of non-blocking switching capacity for a total of 20 Gbps. The switch fabric performs lookup and queueing functions as it routes cell traffic between the port cards and SCP over the backplane.

The SCP primarily provides management access through SNMP and is responsible for storing and updating all SNMP management information. The SCP is also responsible for monitoring the environmental conditions of the switch. The SCP reports conditions such as a failed power supply or fan.

The front panel of the SCP includes the following hardware features:

- Display LED
- 10 Gbps and 20 Gbps LEDs
- Reset Button
- NEXT / SELECT Rocker Switch
- RS-232 Port
- Auto-negotiating Ethernet 10 / 100BaseT Port
- Ejection / Insertion Levers

All of these features are illustrated in Figure 1.3 and are described in detail in the subsections that follow.

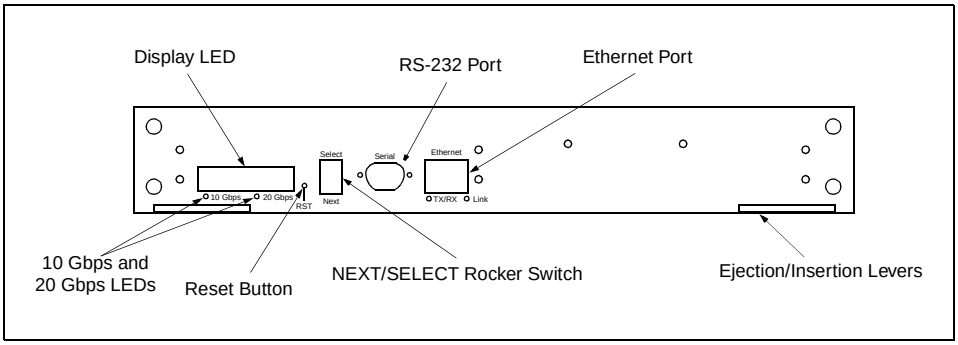

Figure 1.3 - SCP Front Panel

1.2.1.1 Display LED

During the boot process and initial power-on diagnostics, the eight-character display LED (see Figure 1.3) shows messages about operations being performed by the SCP. It also shows the menu choices for the NEXT/SELECT rocker switch after the power is turned on or after the SCP is reset/rebooted.

To access the menu choices, press the NEXT position of the NEXT/SELECT rocker switch while the switch is booting until the mode you want to access is shown on the LED. Then, press the SELECT position to make your choice.

The menu choices shown on the display LED are defined as follows:

ShowMac ? When chosen, the SCP's MAC address is scrolled across the LED display. The scroll can be interrupted by pressing the rocker switch down. The boot process can be resumed from there.

Autoboot ? When chosen, the SCP returns the boot loader to the normal auto-boot sequence.

Ethernet ? When chosen, the SCP uses the bootp protocol to get the IP address and boot file name from the bootp server over Ethernet. The boot loader ignores any revisions of switch software or the Mini Loader stored in the FLASH. (A bootp server needs to be configured before this operation can be performed. See Section 4.6.2 for information on setting up a bootp server.) It then downloads the switch software tar file, decompresses it, and loads it. If unsuccessful, the SCP reboots.

Flash ? When chosen, the SCP attempts to boot from a FLASH image. You can choose from any bootable image in FLASH or return to the main menu level. If there are bootable images, each bootable image is displayed and can be selected. If this is unsuccessful, then the SCP tries to perform an Ethernet boot.

Monitor ? Processor monitor debug mode, no user-accessible functionality.

After the boot process and self-diagnostics are complete, the name of the switch is shown in the display LED during normal operations, if a name has been assigned. If a switch name has not been assigned, it displays `ATM SWITCH`. For information about creating or modifying the switch name, please see Part 2 of the *AMI Configuration Commands Reference Manual*. After an initialization of the configuration database (CDB) using the **`oper cdb init`** command, it displays `ATM SWITCH`.

1.2.1.2 10 Gbps and 20 Gbps LEDs

These LEDs (see Figure 1.3) indicate if you are running a 10 Gbps or an expanded 20 Gbps switch fabric. The appropriate LED illuminates depending upon the hardware installed.

1.2.1.3 RESET Button

The RESET button on the front panel of the SCP (see Figure 1.3) allows you to reset the switch software. The reset operation involves an SCP boot from FLASH or TFTP server and initial power-on diagnostics. During reset, all previously active AMI sessions are ended and active connections to the ports are lost. After the reset operation is complete, the switch software restores the connections from the configuration database (CDB). However, if connection preservation has been enabled, all PVCs and PVPs that are listed in the CDB and found to be intact in the hardware, are maintained without disruption of cell flow. For more information about connection preservation, see Part 2 of the *AMI Configuration Commands Reference Manual.*

The RESET button is small and recessed to prevent accidental resets. It is recommended that you use a straightened paper clip to push the RESET button.

1.2.1.4 NEXT/SELECT Rocker Switch

The NEXT position (see Figure 1.3) lets you scroll through the menu that is shown on the display LED after the power is turned on or after the SCP is reset / rebooted. See Section 1.2.1.1 for more information about the options that are shown on the display LED.

The SELECT position (see Figure 1.3) lets you choose an option from the menu that is shown on the display LED, after the power is turned on or after the SCP is reset / rebooted. See Section 1.2.1.1 for more information about the options that you can choose on the display LED.

1.2.1.5 RS-232 Serial Port

The RS-232 serial port labeled `Serial` (see Figure 1.3), provides access for any VT100 (or similar) terminal or terminal emulation package to the SCP. The serial port for the SCP has a standard DB-9 male connector as shown in Figure 1.4.

.

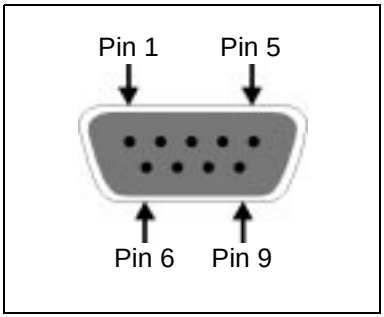

Figure 1.4 - RS-232 Serial Port Pinouts on an SCP

Table 1.1 describes the SCP RS-232 serial port pinouts that are illustrated in Figure 1.4.

Table 1.1 - RS-232 Serial Port Pinouts

Pin Number	Signal Mnemonic	Signal Name
1	DCD	Data Carrier Detect
2	RXD	Receive Data
3	TXD	Transmit Data
4	DTR	Data Terminal Ready
5	GND	Signal Ground
6	DSR	Data Set Ready
7	RTS	Request to Send
8	CTS	Clear to Send
9		Not Used

1.2.1.6 10/100BaseT Ethernet Port

The 10/100BaseT Ethernet port on the front panel of the SCP (see Figure 1.3) is used for out of band management. It is a standard RJ-45 connector as shown in Figure 1.5. The TX/RX LED and Link LED indicate data transmission and reception and network connectivity, respectively. If the SCP is accessed via ATM, the Ethernet connection is not necessary.

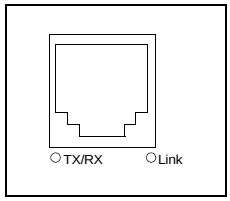

Figure 1.5 - Ethernet Port and LEDs

1.2.1.7 Ejection/Insertion Levers

The SCP/fabric module features ejection/insertion levers (see Figure 1.3) that are used to ensure that the connector pins on the back of the SCP disconnect and connect to the backplane properly when removing and installing the module.

1.2.2 Fan Tray

The *ESX*-3000 has a removable fan tray at the left-rear of the switch chassis. The fan tray contains four fans that cool the hardware components. The state of the fan tray is monitored by circuitry in the SCP, and is available via SNMP. In this manner, the failure of any individual fan can be detected immediately.

The fan tray is hot-swappable and the entire tray may be replaced in the event of single or multiple fan failure. For information about how to hot-swap a fan tray, refer to Chapter 3, ”Hardware Maintenance.”

1.2.3 Power Supply Modules

The *ESX*-3000 can accept up to three AC power supply modules. Each module is equipped with an internal fan that helps to cool the power supply. The number of power supplies that are required to provide power and the resultant redundancy to the *ESX*-3000 is detailed in the following rules of thumb:

- For a 10Gbps configuration with *either ATM or Ethernet port cards*, one power supply is required for normal operation and a second power supply is needed for redundant operation.
- For a 20Gbps configuration with *all ATM port cards*, one power supply is required for normal operation and a second power supply is needed for redundant operation.
- For a 20Gbps configuration with *any number of Ethernet port cards*, two power supplies are required for normal operation and a third power supply is needed for redundant operation.

In situations that require specific operation and/or redundancy calculations, you may use the following formula:

```
Total Power = 284 + (a * 85) + (e * 150)
```

where:

`a` = the number of ATM port cards

`e` = the number of Ethernet port cards

If the `Total Power` is equal to or under 1000 Watts, one supply is required for normal operation and a second power supply is needed for redundant operation.

If the `Total Power` is over 1000 Watts, two supplies are required for normal operation and a third power supply is needed for redundant operation.

Each power supply should be connected to a separate 15 amp AC source, so that in case of an input power line or power supply failure, the remaining power supply(s) maintains uninterrupted system power. Power inlets are located on the front of each power supply.

In a redundant configuration, the power supplies are automatically load sharing and redundant, which means a single power supply can be installed or replaced without interrupting system operation. In the event of a single power supply module failure, the power supply indicator LED(s) on the front panel (as shown in Figure 1.6) of the module will indicate the failed supply. The failed power supply module can be hot-swapped while the other supplies continue to provide power to the switch. In this manner, a single power supply failure will not cause the switch to stop functioning. For information about how to hot-swap a failed power supply module, refer to Chapter 3, ”Hardware Maintenance.”

NOTE

For detailed technical information regarding power supplies, see Appendix A, ”Hardware Specifications.”

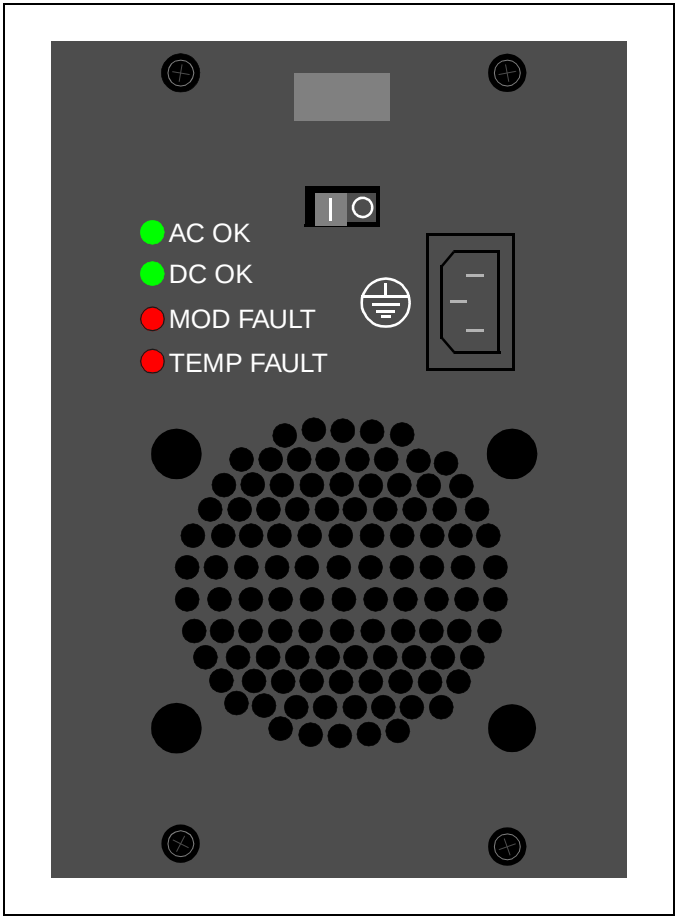

Figure 1.6 - Front Panel of an AC Power Supply Module

NOTE

The handle in Figure 1.6 has been removed for clarity.

1.2.3.1 AC Power Supply LEDs

There are four status LEDs on the front panel of an *ESX*-3000 AC power supply module. The LEDs and their functions are described in Table 1.2. If applicable, some basic troubleshooting tips are also provided. If the problem persists, contact FORE Systems' TAC immediately.

Table 1.2 - AC Power Supply LED Descriptions

LED	Color	Indication	Troubleshooting Tips
AC is OK	Green	AC power present and within limits	N / A
	Off	AC power is out of limits	✓Is the AC power source functioning properly? ✓Are the power cords secured to the power supply enclosure and to the power source? ✓Is the power supply fully-seated and are the thumbscrews tightened?
DC is OK	Green	Power OK, no faults detected	N / A
	Off	The power supply module has faulted. If this LED extinguishes, the DC OK LED illuminates red.	✓Is the AC power cord connected to an approved outlet? ✓This may be due to some internal fault in the power supply. Turn the power off, wait a few minutes, and then turn it back on. If the problem persists, the module may need to be replaced. ✓Is the power supply fully-seated and are the thumbscrews tightened?
Mod Fault	Red	Power module fault, no DC output.	✓If the Temp Fault LED is also red, there is an over-temperature condition. Turn the power off, wait a few minutes, and then turn it back on. ✓Are the fans in the module functioning? If not, the module needs to be replaced. ✓Is the power supply fully-seated and are the thumbscrews tightened? ✓If the AC is OK and the LED green, there is no DC output from the module and it needs to be replaced.
	Off	No fault detected	N / A

Table 1.2 - AC Power Supply LED Descriptions (Continued)

LED	Color	Indication	Troubleshooting Tips
Temp Fault	Red	Unsafe power module temperature. If this LED illuminates red, the DC OK LED usually illuminates red also.	✓The module has reached an unsafe operating temperature. Turn the module off, wait a few minutes, and then turn it back on. ✓Are the fans in the module functioning? If not, the module needs to be replaced. ✓Is the power supply fully-seated and are the thumbscrews tightened?
	Off	Operating temperature OK	N / A

1.2.3.2 AC Shutdown Conditions

To avoid damaging itself or the switch, the *ESX*-3000 AC power supply shuts itself down under the following conditions:

Input undervoltage The AC line voltage is below 85VAC RMS.

Output overvoltage Power supply output is 28 to 30VDC. Shutdown from overvoltage is defeated during power-up period (2 seconds maximum) to allow slow-start.

Overtemperature The power supply has exceeded its environmental conditions.

If the power supply goes into shutdown, it remains turned off until the fault condition is rectified. At that point, the power supply restarts itself, except in the case of an overvoltage condition. To recover from a shutdown caused by an overvoltage state, the AC line input must be removed for at least ten seconds.

If the power supply module needs to be replaced, please refer to Section 3.3 for hot-swap information.

1.2.4 Cable Management System

The cable management system includes two cable combs and multiple port card cable hangers (supplied with each port card) that help to protect and organize the cables. The combs help to route the cables to the individual slots. The port card cable hangers clip to the face of each port card to facilitate routing. Figure 1.7 illustrates the cable management system fully-installed in a cabinet rack mount.

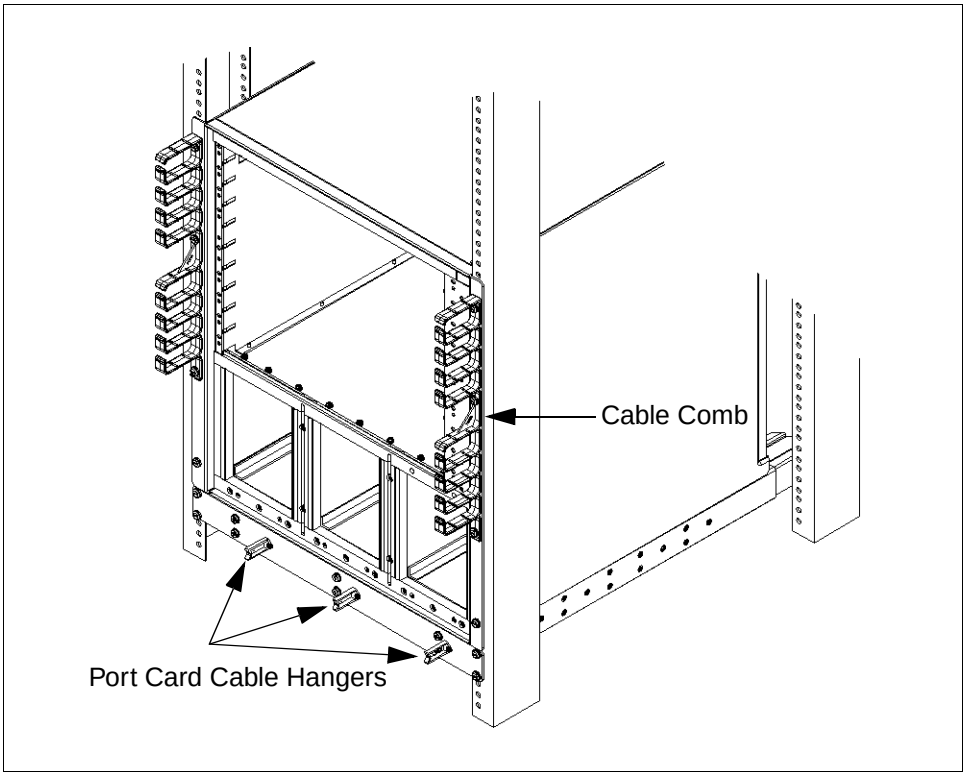

Figure 1.7 - *ESX*-3000 Cable Management System

CHAPTER 2 Hardware Installation/Initial Configuration

This chapter contains first time hardware installation and initial configuration procedures for the *ESX*-3000 switch. The following sections are detailed in this chapter:

- **Section 2.1 -** Site Preparation
- **Section 2.2 -** Unpacking and Checking Equipment
- **Section 2.3 -** Rack Mounting the ESX-3000
- **Section 2.4 -** Installing the Cable Management System
- **Section 2.5 -** Connecting a Terminal
- **Section 2.6 -** Powering Up the Switch
- **Section 2.7 -** Modem Configuration
- **Section 2.8 -** Configuring IP Addresses

NOTE It is important to read through the ENTIRE installation procedure before attempting to turn on the power to the unit.

NOTE For information on hot-swapping components, see Chapter 3, ”Hardware Maintenance.”

2.1 Site Preparation

Before installing the *ESX*-3000 chassis and hardware components, a few guidelines must be followed when determining where to place the unit. The following subsections provide useful information to help you prepare for installation.

NOTE

For detailed information about the technical and operating specifications for the *ESX*-3000, see Appendix A in this manual.

2.1.1 Footprint

A fully configured *ESX*-3000 with mounting shelf weighs approximately 165 pounds. The depth of the unit (without cables) is 19.34" (or 21.19" with fan tray handles.)

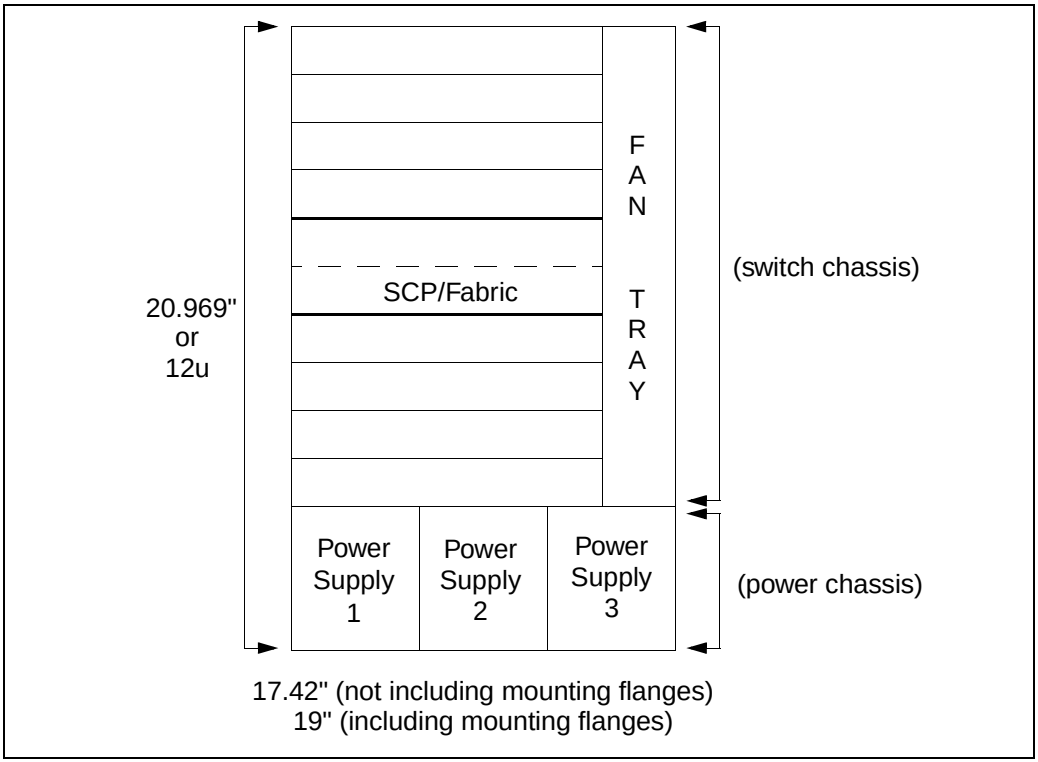

Figure 2.1 - *ESX*-3000 Measurements

2.1.2 Rack Requirements

The *ESX*-3000 must be rack-mounted in a standard equipment rack. Make sure the following rack requirements are provided:

- A shelf MUST be used when installing the unit. Do not use the mounting flanges by themselves.
- Install the switch in a standard 19-inch open or partially enclosed equipment rack.
- If you are installing the switch in an enclosed cabinet and are operating in a 0 to 40°C (32 to 104°F) environment, the cabinet must not have a front door and must have ventilated sides and rear panel.
- If installing the switch in a cabinet, the cabinet must be between 24 to 36 inches deep.
- The rack must be electrically grounded.

2.1.3 Operating Environment Requirements

Make sure the intended area to install the switch provides the following environmental conditions:

WARNING!

Ambient temperature of 0° to 40°C (32° to 104°F) up to 5,000 feet. Consideration must be made if the *ESX*-3000 is to be installed in an enclosed rack, because the ambient temperature of the rack environment may be greater than the room ambient temperature.

- Humidity: 5 to 85% relative humidity, non-condensing
- Ventilation: Adequate air flow on all sides of the unit. Make sure air flow around the sides and back of the switch is not restricted. If using an enclosed rack, make sure there is proper ventilation.

2.1.4 Physical Location Considerations

Before installing the *ESX*-3000 switch components, there are several important physical location factors that must be taken into consideration, depending on the type of installation site:

- Locate the equipment near power outlets and where the power cords will be secure from being accidentally disconnected. The power supplies are located on the bottom of the chassis and the power inlets are located on the front. Power cords provided with each power supply are 10 feet long.
- Equipment may require additional cooling in the room to maintain optimal operating conditions.
- Ensure there is at least 4 feet of clearance in the front of the rack to allow hardware components to be easily installed and removed.
- The switch should never be placed near a radiator or heat register.
- Any heat source positioned to the left of the *ESX*-3000 may degrade the upper range of the operating temperature (40°C). Avoid placing heat-generating equipment to the left of the *ESX*-3000.

2.1.5 Power Requirements and Electrical Precautions

Make sure to provide the following power requirements and that proper electrical precautions are taken:

- For AC power, the switch requires three individual power feeds of single phase 115VAC, 15A, or single phase 230VAC, 10A or greater. A separate power feed (115VAC, 15A) is required for each power supply configured in the unit. Refer to Section 1.2.3 to determine the number of power supplies required for your configuration. Operating more than one power supply on one power feed is *not* supported.
- Do not use 2-conductor AC extension cords. Separate power strips may only be used if they are rated for at least 15A and constructed of 12 AWG wiring (1.00 mm2). Check with a professional electrician if you plan to use power strips or extension cords. Local regulations may vary.
- For AC systems, ensure proper earthing by using the power cords provided with the switch and plugging into properly grounded outlets.
- Use the ground topology as specified by the installation type. The power distribution systems are Class 1, type TN.
- Ensure that the power feeds for this and all other equipment do not overload the power circuits. The sum of the amperage ratings from each unit on the branch circuit must be less than the rated limit of the circuit overcurrent device. The rated values of the wiring must also be greater than the sum of the load carried by the switch.
- It is highly recommended that you use an ESD grounding strap when handling equipment. If using a wrist strap, always connect the strap to any unpainted surface on the chassis, or to a captive screw.

2.1.6 Safety Precautions

For your protection, observe the following safety precautions when setting up equipment:

- Follow all warnings and instructions marked on the equipment.
- Ensure that the voltage and frequency of your power source matches the voltage and frequency inscribed on the equipment's electrical rating label.
- Never push objects of any kind through openings in the equipment. Dangerous voltages may be present. Conductive foreign objects could produce a short circuit that could cause fire, electric shock, or damage to your equipment.
- Do not make mechanical or electrical modifications to the equipment. Warranty will be voided if any unauthorized maintenance is performed on the switch.
- Do not lift the *ESX*-3000 switch chassis by yourself. Two people are required to lift the configured chassis.
- Do not lift the chassis by the power supply or fan tray handles. To lift, use the bottom of the chassis for support.
- Keep tools and hardware components off the floor and away from foot traffic.
- Avoid wearing jewelry or loose clothing that could get caught in the chassis.
- Primary earth ground must be the third-wire safety ground wire attached to the power cord.
- Follow proper ESD precautions.
- Recycle all discarded packaging materials per local regulations.
- Always turn all power supplies off and unplug all power cords before installing or removing the chassis.
- The equipment nameplate amperage rating must not exceed the rated values of the wiring and circuit overprotection device.
- Use the ground topology as specified in the installation type.
- Use the power cords that are provided with the switch to ensure proper grounding. Do not use 2-conductor power strips.
- Ensure that the power feeds do not overload the power circuits.
- There are no operator serviceable parts inside the chassis. Attempting to tamper with the parts inside the chassis may result in serious injury to the user or damage to the equipment.

2.2 Unpacking and Checking Equipment

Upon receipt of, and before unpacking your *ESX*-3000 switch package, inspect the equipment for any damage that may have occurred during shipping. If the package shows any signs of external damage or rough handling, notify your carrier's representative.

When unpacking the equipment, be sure to keep all original packing materials. They may be needed for storing, transporting, or returning the product.

A complete inventory of the *ESX*-3000 switch package should be performed before installing the hardware components and supplying any power to the unit. Check the contents of the switch package against the packing slip and verify that all listed equipment has been received.

If any of the items are missing or damaged, please contact FORE Systems' Technical Assistance Center immediately, using one of the methods described in the Preface of this manual.

2.3 Rack Mounting the *ESX*-3000

The SCP/fabric module and port cards are not installed in the chassis when the switch package is shipped. (The fan tray and power supplies are installed in the chassis). The hardware components are shipped in separate boxes in the shipping container. Before installing any component, the chassis should be mounted in a 19" equipment rack. The standard rack mount kit allows you to mount the chassis in either of the following configurations:

- Cabinet Mount
- Front Mount

The following sections detail the procedures for both configurations. Refer to the section that describes your configuration requirements. You will need the following tools to install the rack mount of your choice:

- Phillips screwdriver
- Straight-blade screwdriver
- ESD grounding strap

When installing the unit for the first time, it is recommended that the hardware installation proceed in the following order:

1. Mount the chassis (with fan tray and power supplies pre-installed) into the rack.
2. Install the SCP/fabric module and port cards.
3. Install the cable management system.

CAUTION

Before you install the switch and plug it in, FORE Systems strongly recommends that you let the unit adjust to room temperature after unpacking the unit from its shipping container.

NOTE

Before starting the installation procedures, make sure you have prepared your site for installation and have read and understood the safety precautions detailed in Section 2.1.

2.3.1 Rack Mount Installation Tips and Requirements

Regardless of the rack mount type you choose, a cabinet shelf *must* be used to rack mount the *ESX*-3000. The cabinet shelf, included in your kit, is illustrated in Figure 2.2.

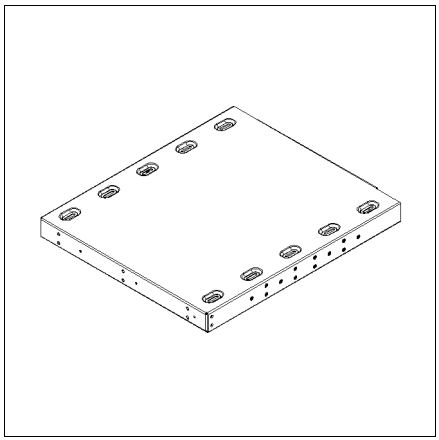

Figure 2.2 - Cabinet Shelf

After opening your rack mount kit, perform a complete inventory of its contents before proceeding. The parts you use depends on the type of equipment rack you are installing.

NOTE To ensure rack stability and enough clearance to install the switch in the rack, use the lowest rack position available.

NOTE The rack mount kit MUST be used to rack mount the switch. Any substitution or omission of a rack-mount component may result in an unstable rack installation and may damage the equipment and/or cause injury to the user.

NOTE If the equipment rack is on wheels, ensure that the rack is stabilized.

2.3.2 Cabinet Mounting the *ESX*-3000

To cabinet mount the *ESX*-3000, you need the following parts from the rack mount kit:

- 1 cabinet shelf
- 1 front panel
- 3 cable clamps
- 2 shelf angles
- 16 #10 coarse thread screws with nylon washers
- Up to 16 #10 fine thread screws with metal washers
- 3 #4 screws

To cabinet mount the *ESX*-3000, do the following:

1. Attach the front panel to the front of the cabinet shelf with six #10 screws with metal washers.
2. Attach three cable clamps to the front of the front panel/cabinet shelf assembly with three #4 screws.

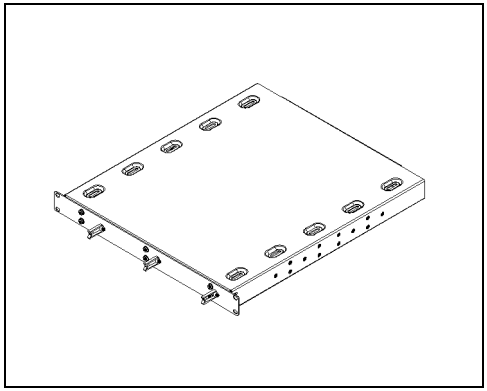

Figure 2.3 - Front Panel to Shelf Assembly with Cable Clamps Attached

3. Mount the front of the cabinet shelf assembly completed in Step 2 onto the cabinet enclosure with four #10 screws with nylon washers. Do not tighten the screws, but leave them somewhat loose. You will tighten all screws once the shelf assembly is complete and aligned.

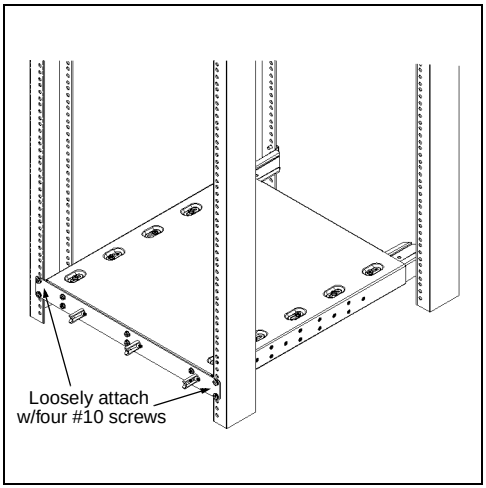

Figure 2.4 - Attaching Shelf Assembly to Front Cabinet Enclosure

4. Slide the shelf angles into the rear of each side of the cabinet shelf assembly. Position until flush with the rear rails of the cabinet enclosure. Loosely secure the shelf angles to the rear rails with four #10 screws with nylon washers. Again, do not tighten completely.

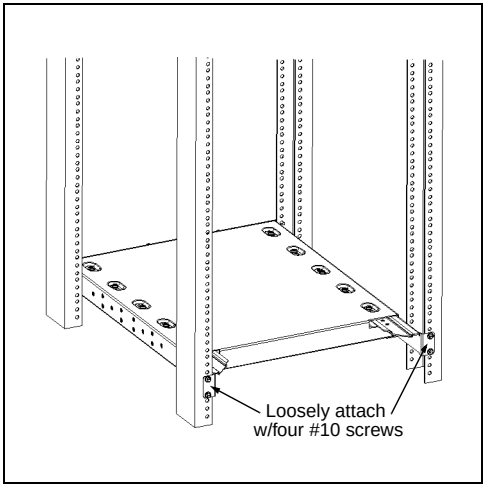

Figure 2.5 - Attaching Shelf Angles to Rear Cabinet Enclosure

5. Secure the cabinet shelf assembly to the shelf angles with the required number of #10 screws with metal washers. The number of screws required depends upon the depth of your cabinet enclosure.

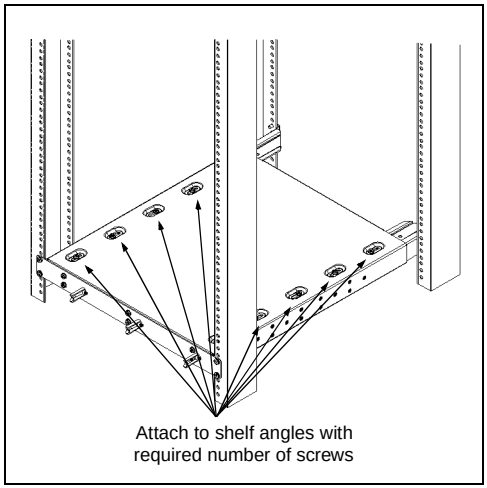

Figure 2.6 - Secure Cabinet Shelf Assembly to Shelf Angles

6. Once all components are squarely aligned and level, tighten all screws.
7. Install the *ESX*-3000 onto the cabinet shelf assembly as follows:

CAUTION

Because of the unit's weight, two people should lift the unit to place it in the equipment rack. Do NOT lift the *ESX*-3000 switch chassis by yourself.

a. With a person standing at each side of the *ESX*-3000 chassis, grasp the bottom edge of the chassis with one hand near the front and the other near the back and slowly lift the chassis in unison.

b. Place the chassis on top of the shelf with the front of the unit facing forward and the mounting flanges on each side of the chassis flush with the two front rails on the rack.

c. Align the mounting holes on each side of the flanges on the chassis with the mounting holes on the two front rails on the rack and secure using eight #10 screws with nylon washers.

2.3.3 Front Mounting the *ESX*-3000

To front mount the *ESX*-3000, you need the following parts from the rack mount kit:

- 1 cabinet shelf
- 1 front panel
- 3 cable clamps
- 2 shelf supports
- 10 #12 screws with nylon washers
- 8 #10 screws with nylon washers
- 18 #10 fine thread screws with metal washers
- 3 #4 screws

To front mount the *ESX*-3000, do the following:

1. Attach the front panel to the front of the cabinet shelf with six #10 screws with metal washers. Make sure that all the holes in the front panel line up with all the holes on the shelf.
2. Attach three cable clamps to the front of the front panel/cabinet shelf assembly with three #4 screws.

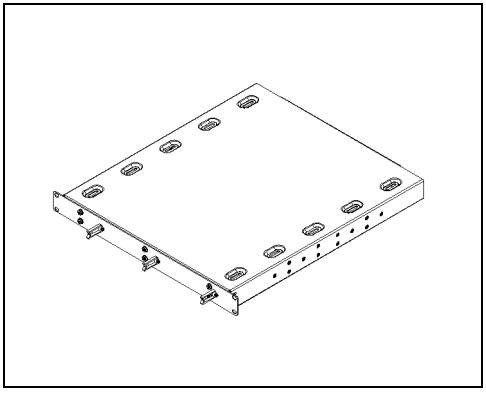

Figure 2.7 - Front Panel to Shelf Assembly with Cable Clamps Attached

3. Mount the front of the cabinet shelf assembly completed in Step 2 onto the cabinet enclosure with four # 12 screws with nylon washers. Do not tighten the screws, but leave them somewhat loose. You will tighten all screws once the shelf assembly is complete and aligned.

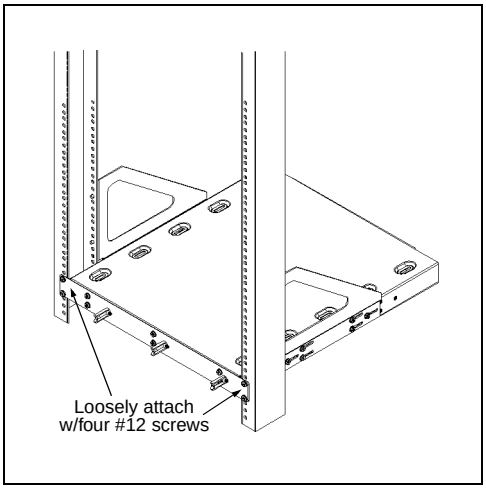

Figure 2.8 - Attaching Cabinet Shelf Assembly to Front Cabinet Enclosure

4. Attach the bottoms of the shelf supports to the sides of the cabinet shelf assembly using 12 #10 screws with metal washers.

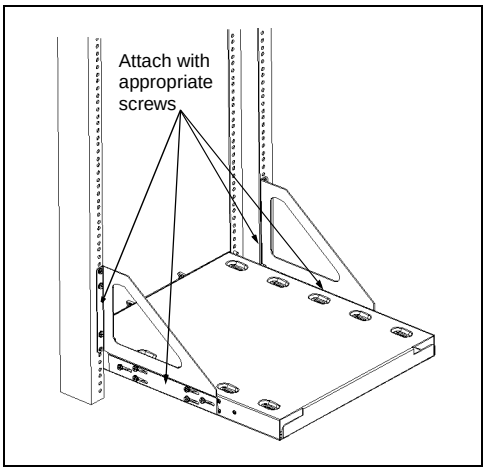

Figure 2.9 - Attaching Shelf Supports to Front Rails

5. Loosely attach shelf supports to rear of front rails using six #12 screws with nylon washers. Again, do not tighten it completely.
6. Once all components are squarely aligned and level, tighten all screws.

7. Install the *ESX*-3000 onto the cabinet shelf assembly as follows:

CAUTION

Because of the unit's weight, two people should lift the unit to place it in the equipment rack. Do NOT lift the *ESX*-3000 switch chassis by yourself.

a. With a person standing at each side of the *ESX*-3000 chassis, grasp the bottom edge of the chassis with one hand near the front and the other near the back and slowly lift the chassis in unison.

b. Place the chassis on top of the shelf with the front of the unit facing forward and the mounting flanges on each side of the chassis flush with the two front rails on the rack.

c. Align the mounting holes on each side of the flanges on the chassis with the mounting holes on the two front rails on the rack and secure using eight #12 screws with nylon washers.

2.4 Installing the Cable Management System

The *ESX*-3000 cable management system includes cable combs and port card cable hangers to help organize and protect the fiber cables. The following subsections describe how each component is installed.

2.4.1 Installing the Cable Combs

The cable combs protect and organize the system cables routed to individual slots. The cable combs, shown in Figure 2.10, are attached to the front rails of the cabinet enclosure. See Section 1.2.4 for installation details.

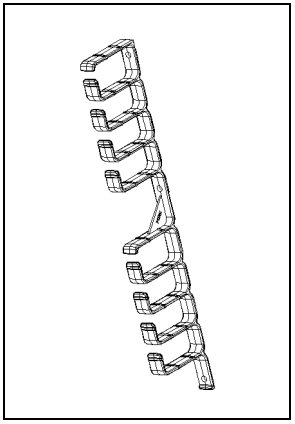

Figure 2.10 - Cable Comb

2.4.2 Installing the Port Card Cable Hangers

The port card cable hangers, shown in Figure 2.11, attach to the face of each port card installed in your system. They help facilitate cable routing which optimizes overall system organization. To install the hangers, simply squeeze them into the pre-drilled holes located along the front lip of the port card.

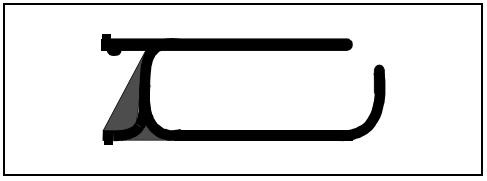

Figure 2.11 - Port Card Cable Hanger

2.5 Connecting a Terminal

Before turning on the power supplies in the *ESX*-3000, a terminal should be connected for monitoring power-up behavior and performing initial configurations (e.g., IP and Ethernet interfaces). These configurations are necessary on each installed SCP.

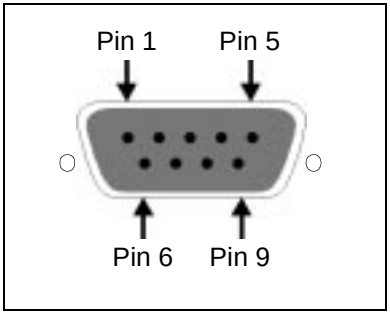

Figure 2.12 - Serial Port Pinouts

For serial port pinout specifications, see Section 1.2.1.5.

Connect the included serial cable from the serial port of the SCP to any tty-type device (such as a terminal, or the serial port of a workstation or PC running a terminal emulation program). The *ESX*-3000's serial port comes configured at:

- 9600 baud
- 8 bits
- no parity
- 1 stop bit

2.6 Powering Up the Switch

Before turning on the switch, verify the following:

- Ensure that any unpopulated slots have a blank board installed. Operating the *ESX*-3000 with any of these slots left open can cause a significant temperature rise in a very short time.
- Ensure that each power supply module is properly inserted and all captive screws are secured.
- Ensure that all power supply switches are OFF.
- Ensure that the SCP / fabric module and port cards are properly inserted.
- Ensure that the fan tray is secured.
- Ensure that all network connections are secured.
- Ensure that all AC power cords are securely connected to the front of each power supply.

2.6.1 Connecting to AC Power

The steps below should be followed when connecting the unit to an AC power source:

1. Plug the male end of each power cord into an approved electrical outlet (110 volt).

NOTE Make sure you are plugging the power cord into four SEPARATE branch circuits.

2. Repeat step 1 for each power supply.
3. Turn the power switch on all power supplies to the ON position. The `AC is OK` and `DC is OK` LEDs on each power supply should illuminate green and you should hear the fans start to operate.

For a list of AC power supply LED descriptions and troubleshooting tips, see Section 1.2.3.1.

After turning on the *ESX*-3000, you should see it boot on the attached tty device. The *ESX*-3000 is ready for user configuration as soon as it boots. To access the *ESX*-3000, enter `ami` at the prompt of the tty device.

NOTE

The *ESX*-3000 is operational at this point if used with other FORE equipment (i.e., switches or interface cards). However, if other vendor equipment is connected, you may have to complete an initial user configuration. To do this, please refer to Section 2.8 or use the **`startup`** command in AMI. For more information about the **`startup`** command, please see Chapter 1 in the *ATM Management Interface (AMI) Manual*.

NOTE

If you wish to have remote access to the *ESX*-3000, you must first connect and configure a modem. Please refer to Section 2.7 for more information.

2.7 Modem Configuration

The *ESX*-3000 switch supports modem access. This may be useful if a switch is installed in a remote location where direct, physical access to the switch is not possible or practical. Keep the following in mind when using a modem to access the *ESX*-3000.

- To allow the switch to communicate with the modem, a female to modem-end connector must be installed on the factory-supplied null-modem serial cable.
- The switch will not disconnect an ATM Management Interface (AMI) session on loss-of-carrier; therefore, you must ensure that you have completely exited from an open AMI session before disconnecting the modem session.

To allow the modem to work, the modem parameters must be configured correctly.

NOTE The *ESX*-3000 only supports a modem speed of 9600 baud.

2.7.1 Modem Parameters

You should use a Hayes-compatible modem, as the configuration parameters supplied here are applicable to this type of modem. The following parameters should be applied to your Hayes-compatible modem to allow it to function properly with the switch's serial port. You may attach a tty device to the modem to set these parameters.

The parameters are defined as follows:

Setting	Comment
ATE0	Turn off Echoing
ATQ1	No Return Codes
AT&C0	Force Carrier Detect (CD) High
AT&D0	Ignore Data Terminal Ready (DTR)
AT&W	Save Modem Configuration

2.8 Configuring IP Addresses

On a new switch, the `ie0`, `asx0`, `qaa0`, `qaa1`, `qaa2`, and `qaa3` interfaces are not configured. An IP address for at least one of the interfaces must be configured to allow IP access to the switch, which in turn, enables SNMP access. By setting the IP address of the FORE IP (`asx0`) or one of the Classical IP (`qaa`) interfaces, in-band (over ATM) access to the switch control processor (SCP) is enabled. By setting the IP address of the Ethernet IP (`ie0`) interface, out-of-band access to the SCP is enabled.

NOTE Although this section describes FORE IP first, then Classical IP, and then LANE, it does not matter in which order or in which combination you choose to configure your switch.

NOTE As of *ForeThought* 6.0, the default routing protocol is ATM Forum PNNI. The protocol may be changed via AMI. Please refer to *ForeThought Release Notes* for more information.

2.8.1 Overview of IP Addressing

If you wish to use SNMP functions, the minimum configuration is to assign an IP address to a network interface. This allows you to communicate with the switch from any network-attached workstation. IP addresses must be assigned to the network interfaces in order to perform any SNMP functions.

2.8.1.1 Logical IP Subnets

An important concept in IP ATM networks is that of a Logical IP Subnet (LIS). An LIS is a group of hosts configured to be members of the same IP subnet (that is, they have the same IP network and subnetwork numbers). It is possible to maintain several overlaid LISes on the same physical ATM network. Therefore, placing a host on a specific subnet is a logical choice rather than a physical one.

The number of LISes, and the division of hosts into each LIS, is purely an administrative issue. Limitations of IP addressing, IP packet filtering, and administrative boundaries may guide a manager into establishing several LISes onto a single ATM network. Keep in mind that communication between LIS's must occur through IP routing.

The IP subnet mask is a pattern of 32 bits that is combined with an IP address to determine which bits of an IP address denote the network number and which denote the host number on that particular network.

2.8.1.2 Network Classes

There are three classes of networks in the Internet, based on the number of hosts on a given network.

- Class A - These are large networks with first octet in the range 1-126 and with a maximum of 16,387,064 hosts.
- Class B - These are medium networks with first octet in the range 128-191 and with a maximum of 64,516 hosts.
- Class C - These are small networks with first octet in the range 192-254 with a maximum of 254 hosts.

Addresses are given as dotted decimal numbers in the following format:

`nnn.nnn.nnn.nnn`

In a Class A network, the first of the numbers is the network number, the last three numbers are the local host address. The default subnet mask is 255.0.0.0.

In a Class B network, the first two numbers are the network, the last two are the local host address. The default subnet mask is 255.255.0.0.

In a Class C network, the first three numbers are the network address, the last number is the local host address. The default subnet mask is 255.255.255.0.

2.8.2 Configuring Ethernet IP

To configure the Ethernet IP on the *ESX*-3000, use the following AMI command on the switch:

`configuration ip address` *`<interface> <address> <netmask> <up>`*

To use Ethernet IP on the switch, you must use `ie0` as the *`<interface>`*. The *`<address>`* would be one that is appropriate for your network. The subnet *`<mask>`* must be entered in dotted decimal notation. For example, you would enter something similar to the following:

`configuration ip address ie0 198.25.22.46 255.255.255.0 up`

By default, the only interface on a switch which is `up`, or active, is the switch's local interface, `lo0`. This interface is always `up` to allow AMI to run on the switch. All of the other interfaces are `down`, or not active. You must change the state of the Ethernet IP interface to be `up`, or active.

At this point, Ethernet IP is running on the switch. To configure FORE IP, follow the examples shown in the next section.

2.8.3 Configuring FORE IP

To configure the FORE IP on the *ESX*-3000, use the following AMI command on the switch:

`configuration ip address` *`<interface> <address> <netmask> <up>`*

To use FORE IP on the switch, you must use `asx0` as the *`<interface>`*. The *`<address>`* would be one that is appropriate for your network. The subnet *`<mask>`* must be entered in dotted decimal notation. For example, you would enter something similar to the following:

```
configuration ip address asx0 198.25.22.46 255.255.255.0 up
```

By default, the only interface on a switch which is `up`, or active, is the switch's local interface, `lo0`. This interface is always `up` to allow AMI to run on the switch. All of the other interfaces are `down`, or not active. You must change the state of the FORE IP interface to be `up`, or active.

At this point, FORE IP is running on the switch. To configure Classical IP, follow the examples shown in the next section.

2.8.4 Configuring Classical IP

To configure Classical IP on the *ESX*-3000, perform the following:

1. Configure the IP address of one of the Classical IP interfaces (`qaa0`, `qaa1`, `qaa2`, `qaa3`) by entering the following AMI command:

   `configuration ip address` `<interface> <address>`

   where `<interface>` must be one of the qaa interfaces. If you are configuring one Classical IP interface, you should use qaa0. `<address>` would be one that is appropriate to your network. For example, you would enter something similar to the following:

```
configuration ip address qaa0 198.25.22.48 255.255.255.0 up
```

NOTE For more information about Classical IP, see Chapter 2 in the *ATM Switch Network Configuration Manual*.

Be sure that the adapter interface to the switch has been configured. For information about configuring this interface, refer to the User's Manual that came with your particular adapter.

2.8.4.1 Configuring the ARP Server

If you wish to use a workstation or a switch other than this switch as the ARP server, then you must configure the ARP server for your switch. To configure the address of the ARP server, use the following AMI command:

configuration atmarp arpserver set *<NSAPaddress>* [*<interface>*]

Use the command **configuration atmarp getnsap** to display the NSAP address for this interface and cut and paste the *<NSAP address>* from the display.

Again, since you are configuring Classical IP, the *<interface>* must be one of the qaa interfaces. If you are using qaa0, you do not need to enter it since it is the default interface. If you are using a different qaa interface, you must enter a value for *<interface>*. For example, you would enter the following:

```
configuration atmarp arpserver set
47000580ffe1000000f12400de0020481900de00 qaa1
```

At this point, Classical IP is running on the switch. To configure LAN Emulation, follow the examples shown in the next section.

2.8.5 Configuring LAN Emulation

There are different instructions for configuring an ELAN, depending on how your network is currently configured. Please see Chapter 3 in the *ATM Switch Network Configuration Manual* for more information.

2.8.6 Configuring IP Routes

A static IP route can be added to the local IP routing table. To create an IP route, use the following AMI command on the switch:

configuration ip route new (default | *<destination-ipaddress>*)
***<gateway>* [*<metric>*] [(*host* | *net*)]**

To create a default route, you must enter default. The *<destination-ipaddress>* would be the destination IP network number. The*<gateway>* would be the gateway address to the destination IP network number. The [<metric>] would be the number of hops to the destination IP network. If 1 is specified, the route is created with the RTF_GATEWAY flag set. The default is 1. The [(host)] means this is a host-specific route with the destination being a specific node's IP address. net means this is a network-specific route with the destination being a network IP address. The default is net. For example, you would enter something similar to the following:

configuration ip route new default 198.25.22.46 198.25.22.21

Use the following AMI command to display the current IP routes configured:

configuration ip route show

The following displays:

```
Destination      Gateway          Metric      Interface     Flags
default          169.144.48.1     1           le0           G
169.144.48.0     169.144.48.21    0           le0
169.144.60.0     169.144.60.21    0           asx0
169.144.64.0     169.144.64.21    0           qaa0
169.144.200.0    169.144.200.21   0           el0
169.144.204.0    169.144.204.21   0           el1
169.144.205.0    169.144.205.21   0           el2
169.144.206.0    169.144.206.21   0           el3
```

NOTE

See Part 1 of the *AMI Configuration Commands Reference Manual* for more information about the IP configuration commands.

2.8.7 Subsequent Operation

After its initial configuration is complete, the switch *DOES NOT* require a terminal for normal operation.

NOTE

FORE Systems strongly recommends that you disconnect the serial cable once you have configured the switch and then access the switch over the ATM network or over Ethernet.

All further communication with your switch can be performed over the ATM network or over Ethernet. For example, you can access AMI using telnet. For information on logging into AMI, see the *ATM Management Interface (AMI) Manual*.

WARNING!

Once installed, before any service is performed on the unit, the power should be turned off, except when following the hot-swap instructions in this manual.

CHAPTER 3 Hardware Maintenance

This chapter describes how to remove and replace the field replaceable units used in the *ESX*-3000. Items discussed include the following:

- **Section 3.1 -** SCP/Fabric Module Replacement
- **Section 3.2 -** Port Card Replacement
- **Section 3.3 -** Power Supply Module Replacement
- **Section 3.4 -** Fan Tray Replacement

3.1 SCP/Fabric Module Replacement

The Switch Control Processor (SCP)/Fabric module can be hot-swapped, meaning you can remove and replace a failed module with the switch still under power. The ejection/insertion levers on each end of the module are used to ensure the connector pins on the back of the module disconnect and connect to the backplane properly when removing and installing. The levers help to protect against accidental ejection and allow the software to recognize the presence or absence of the module. Note the following precautions before starting the hot-swap procedures:

CAUTION

Failure to backup and restore your CDB can result in lost configuration data.

WARNING!

Follow proper ESD precautions when handling this or any other component.

CAUTION

Do not attempt to remove or replace an SCP without first removing all connections to the SCP (i.e., serial or Ethernet connections).

1. Log out of all open AMI sessions on the module that is to be replaced.
2. Remove all Ethernet and / or serial connections to the module.
3. Remove the failed module as follows:
   a. Using a straight-blade screwdriver, unscrew the four mounting screws that attach the module to the slot mount.

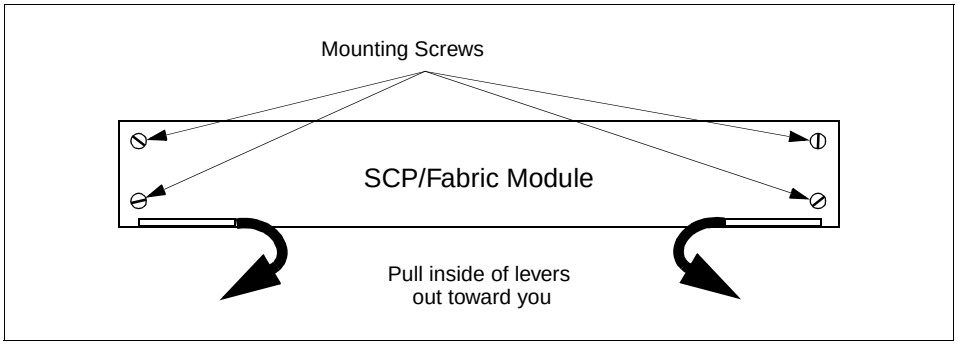

Figure 3.1 - SCP / Fabric Module Removal

   b. Pull the two ejector levers out toward you as shown in Figure 3.1. This releases the module from the slot.
   c. Using the levers as handles, pull the module from the slot and set the module aside.
4. Install the replacement module, as follows:
   a. Carefully align the module with the guide rails on the left and right sides of the appropriate slot. Firmly push the module into the chassis until the front panel is roughly flush with the other components installed in the rack.
   b. Firmly push on the levers to ensure that the module is pushed all the way back into the chassis and firmly against the backplane. You will feel the module properly seating itself. It may take a significant amount of force to fully seat the module.
   c. Using the straight-blade screwdriver, tighten the four mounting screws that attach the module to the slot mount.

3.2 Port Card Replacement

The port cards in the *ESX*-3000 switch are hot-swappable, meaning that they can be removed and replaced with the unit under power. Port cards should only be hot-swapped for purposes of replacing a failed unit. Therefore, they should be replaced with an *ESX*-3000 port card of the same type with the same number of ports. A port card's type is the class to which the port card belongs (e.g., OC-12c/STM-4c). When a port card is removed, the connections are torn down. Once the replacement card has been installed, all connections are restored according to the configuration database.

If a port card is removed and replaced by a port card of another type or by a port card with fewer ports, all configuration information for that port card's slot will be deleted, and the new port card will be configured with the defaults for its type. For example, if a 4-port OC-12c/STM-4c is replaced by a 16-port OC-3/STM-1c UTP card, all configuration information for the slot will be deleted, and the new OC-3c/STM-1c initialized with OC-3c/STM-1c defaults. If a port card is placed into a previously vacant slot, it will be initialized into the default state appropriate to that type of port card.

Note the following precautions before starting the hot-swap procedures:

NOTE

To reduce risk to the user and to prevent damage to equipment, it is recommended that you use a grounding strap when handling this or any other component.

NOTE

All AMI sessions should be terminated before swapping port cards of different types.

CAUTION

Do not attempt to remove or replace a port card without first removing all network connections.

CAUTION

All port card slots in the *ESX*-3000 must be populated by either a port card or supplied blank to ensure proper cooling. Failure to do so may create a significant temperature rise and ultimate system failure.

1. If replacing a port card with one that is of a different type, log out of AMI.
2. Label and remove all network connections from the ports on the port card you are going to remove.
3. Remove the failed port card as follows:
   a. Using a straight-blade screwdriver, unscrew the two mounting screws that attach the card to the slot mount.
   b. Lift up on and hold the ejector release tab to release the card from the slot.
   c. Flip the two ejector levers out toward you as shown in Figure 3.2.
   d. Using the ejector levels as handles, pull the card from the slot and set it aside.

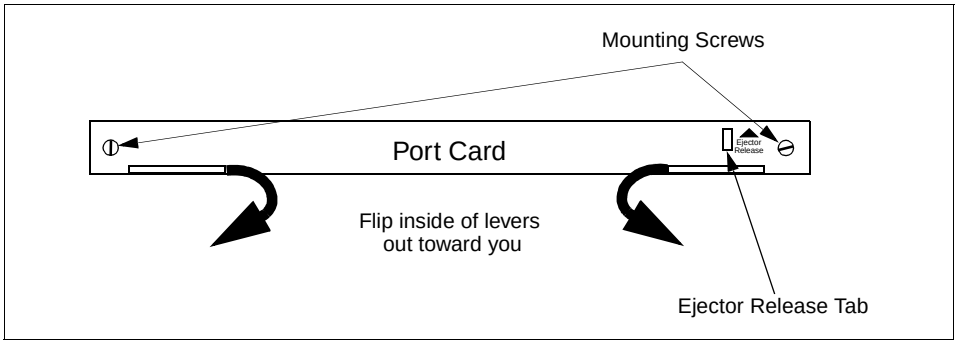

Figure 3.2 - Removing a Port Card from the Slot

4. Install the replacement port card as follows:
   a. Carefully align the port card with the guide rails on the left and right sides of the appropriate slot. Firmly push the card into the chassis until the front panel is flush with the other components installed in the rack.
   b. Firmly push on the levers to ensure that the port card is pushed all the way back into the chassis and firmly against the backplane. You will feel the card properly seating itself as the ejector release tab clicks down.
   c. Using the straight-blade screwdriver, tighten the two mounting screws that attach the module to the slot mount.
5. Restore the network connections you previously labeled in Step 2.

3.3 Power Supply Module Replacement

The power supply modules in the *ESX*-3000 are hot-swappable, meaning that in the event of a single power supply module failure, it can be removed or replaced without having to shut down the switch.

WARNING!

DO NOT attempt to replace a power supply module without reading this section. Serious injury to the user or damage to the equipment may result if proper replacement procedures are not followed.

3.3.1 Hot-Swapping an AC Power Supply Module

The procedure for hot-swapping an *ESX*-3000 AC power supply module is as follows:

WARNING!

To reduce risk to the user and to prevent damage to the equipment, follow proper ESD precautions when handling this or any other component.

1. Determine which power supply module is defective by either consulting the *Element Manager* to tell which is the bad supply, or by examining the power supply modules themselves. A red or extinguished LED indicates the failed supply.

WARNING!

Failure to perform Step 2 can result in serious injury to the user or damage to the equipment.

2. Turn OFF (**O**) the power switch on the front of the defective power supply module.
3. Disconnect and unplug the power cord.

4. Loosen the four captive screws on the front of the unit using a straight-blade screwdriver.

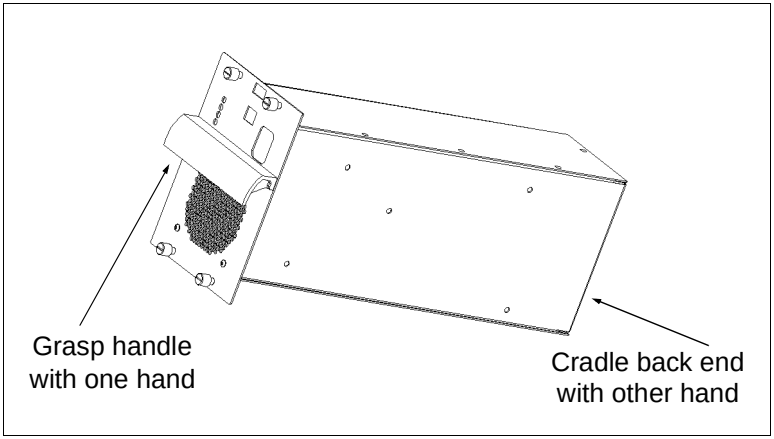

Figure 3.3 - Removing a Power Supply Module

5. Carefully pull forward on the handle and use your other hand to support the back end as you are sliding the module out. Set the module aside.

WARNING!

Failure to perform Step 6 can result in serious injury to the user or damage to the equipment.

6. Ensure that the power switch on the new power supply module is turned OFF (O) before inserting it into the power supply enclosure.
7. Carefully align the replacement module with the guide rails in the appropriate power supply slot and push the module back into the enclosure until the front panel is flush with the other power modules.
8. To ensure maximum safety, and to ensure that the connectors have seated properly, re-tighten the captive screws using a straight-blade screwdriver.
9. Reconnect and plug in the power cord, and turn the power switch to the ON (I) position.
10. After a second or two, the OK LEDs on each supply illuminates green, indicating that the supply is functioning properly.

3.4 Fan Tray Replacement

The *ESX*-3000 is equipped with a fan tray containing four fans that cool the switch chassis. The fan tray is hot-swappable, meaning that in the event of a fan failure, the entire tray can be replaced with the *ESX*-3000 under power.

The procedure for replacing the fan tray is as follows:

WARNING!

It is highly recommended that you use a grounding strap when handling this, or any other, component.

1. Loosen the four mounting screws on the rear of the fan tray using a straight-blade screwdriver.

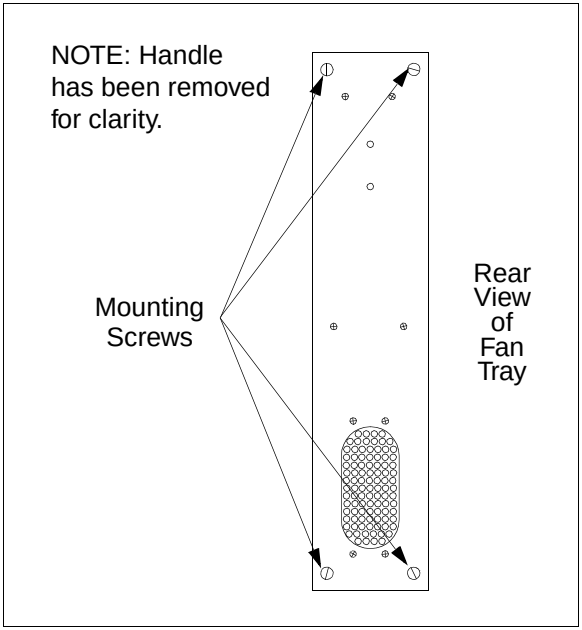

Figure 3.4 - Rear View of Fan Tray

2. Pull the fan tray from the switch. As you are pulling it out, use one hand to grasp the front panel and the other hand to support the bottom. Set the fan tray aside.
3. Carefully align the tray with the guide rails and push the tray back into the chassis using enough force to ensure that the connectors on the back of the fan tray mate with the connectors on the backplane.
4. Re-tighten the four mounting screws to ensure maximum safety and to ensure that the connectors have seated properly. You should hear the fans start to operate.

CAUTION

Do not run the unit for over one minute without the fan tray installed or an over-temperature condition of the unit may arise.

CHAPTER 4 Software Upgrade Instructions

This chapter details the steps necessary to upgrade the *ForeThought* software on the *ESX*-3000. Some instructions in this chapter apply only in certain situations, and you may or may not have to go through every section. Read the following list to better understand how the instructions are ordered before moving on:

- **Section 4.1 -** Obtaining the Software Upgrade File via FTP
- **Section 4.2 -** Requirements for Upgrading with the Mini Loader
- **Section 4.3 -** Performing the Software Upgrade
- **Section 4.4 -** Changing between Multiple Versions of Software
- **Section 4.5 -** Booting and Upgrading with the Mini Loader
- **Section 4.6 -** Using Bootp to Download Software to the Switch

CAUTION

As a precaution, it is recommended that you back up your configuration database (CDB) before beginning the upgrade process. For more information on this, see the *ATM Management Interface (AMI) Manual*.

NOTE

If you have configured the switch to use TFTP as the transfer protocol (this is the default) using the **`configuration system protocol`** command, then the **`operation upgrade`** command can be issued one of two ways, depending on how TFTP is configured on the TFTP server that holds the upgrade file. For more information about using this command with TFTP, see Section 4.3 and Section 4.6.4.

NOTE

The *ESX*-3000 only supports *ForeThought* 6.0 or later.

4.1 Obtaining the Software Upgrade File via FTP

Before beginning the upgrade process, you will need the upgrade file from FORE Systems. To obtain the file via FTP, you must have FTP access.

The software upgrade can be retrieved from FORE Systems via anonymous FTP using the following procedure. Contact the FORE Systems' Technical Assistance Center (TAC) using one of the methods described in the Preface of this manual to obtain the appropriate directory and list of file names. Once you have this information, FTP to `ftp.fore.com`. and log in as `anonymous`. Enter your full e-mail address (e.g., `jdoe@somewhere.com`) when you are prompted for a password.

NOTE For security reasons, your password is not echoed.

Once you connect to FORE's FTP site (you will see the `ftp>` prompt), you must change to the directory indicated to you by the FORE Systems TAC staff member. This directory contains the *ForeThought* software upgrade files and the release notes which contain important information about the software release.

Before you retrieve the software files, you must switch the transfer mode to `binary`.

The following script is an example of how you might retrieve the software and `.readme` files. User input is shown in **`bold courier`** font.

```
server-jdoe:52=> ftp ftp.fore.com
Connected to ftp.fore.com.
220-FORE Systems Inc. FTP Server
220-
220-This FTP site is only for authorized customers and employees of FORE
220-Systems, Inc.  Unauthorized access or use is subject to discipline,
220-criminal, and/or civil sanctions.  This system will be monitored for
220-unauthorized users.  All users consent to monitoring.
220-
220 ftp.fore.com FTP server (Version wu-2.4(4) Tue May 11 13:53:34 EDT 1998) ready.
Name (ftp.fore.com:eio): anonymous
331 Guest login ok, send your complete e-mail address as password.
Password: TYPE YOUR FULL E-MAIL ADDRESS HERE AND PRESS <ENTER>
230 Guest login ok, access restrictions apply.
ftp> cd /directory/directory/directory <ENTER>
250 CWD command successful.
ftp> binary <ENTER>
200 Type set to I.
ftp> get esx-3000_p5_6.0.0_1.xxxxx.Z <ENTER>
200 PORT command successful.
150 Opening BINARY mode data connection for esx-3000_P5_6.0.0_1.xxxxx.Z (8147013 bytes).
226 Transfer complete.
local: esx-3000_P5_6.0.0_1.xxxxx.Z remote: esx-3000_P5_6.0.0_1.xxxxx.Z
8147013 bytes received in 2.3e+02 seconds (35 Kbytes/s)
ftp> quit <ENTER>
221 Goodbye.
```

NOTE

If you have retrieved a software file with a .tar extension, do NOT untar it. The **`operation upgrade`** command in the ATM Management Interface (AMI) will expect the upgrade file to be in tarfile format.

NOTE

The tarfile is specific to the processor type used in the *ESX*-3000. Make sure you retrieve the appropriate tarfile.

If you have difficulty retrieving the files or if you have any other questions regarding the FTP site, please contact FORE Systems' Technical Assistance Center by using one of the methods described in the Preface of this manual.

Once you have successfully retrieved the software upgrade file via FTP, follow the instructions in Section 4.3 in this manual.

4.2 Requirements for Upgrading with the Mini Loader

If you want to keep only one switch software image in FLASH, it is recommended that you also keep a copy of the Mini-Loader in FLASH.

NOTE

This section applies only if you need to use the Mini Loader to help you perform the upgrade. If you do not need to use it, proceed to Section 4.3 in this manual.

The following steps are necessary when upgrading with the Mini Loader:

1. You should have already downloaded the software upgrade file to a UNIX workstation.
2. Download the Mini Loader software to the same UNIX workstation as you did the upgrade file (see Section 4.2.1 in this manual).
3. Delete any old versions of software from FLASH (see Section 4.2.2 in this manual).

CAUTION

Make sure you do not delete the *active* version of switch software until step 5.

4. Upgrade your switch to the Mini Loader (see Section 4.2.3 in this manual).
5. Delete the active version of switch software from FLASH (see Section 4.2.4 in this manual).
6. Perform the software upgrade (see Section 4.3 in this manual).

4.2.1 Downloading the Mini Loader Software

You can obtain the Mini Loader software just as you obtained the software upgrade file, via FTP. If you are obtaining the Mini Loader software via FTP, follow the same instructions as in Section 4.1 of this manual, but substitute the Mini Loader filename for the upgrade filename.

4.2.2 Emptying the FLASH

Once you have obtained the software upgrade file and the Mini Loader software, you must open an AMI session and delete all previous versions of switch software except the current version from the FLASH of the switch being upgraded.

For example, if you are running FT 6.0.0 and you still have an image for a previous version in FLASH, you must delete the `foreos.exe` file from the directory, then delete the directory itself. Enter something similar to the following at the prompt:

`operation flash delete ft600.x/foreos.exe`

`operation flash delete ft600.x`

If there are any other files or directories stored in FLASH, EXCEPT the active version of switch software, you should delete them according to the above conventions.

CAUTION

Make sure you do not delete the active version of switch software from FLASH until you reach Section 4.2.4 in this manual.

NOTE

If the `CURRENT` pointer is inadvertently deleted, you can recreate the pointer by using the **`operation version`** command and specifying the version.

4.2.3 Upgrading the Switch to the Mini Loader

Once you have deleted any extra items from FLASH, you must upgrade the software on your switch to the Mini Loader. Before initiating the upgrade, you must ensure that the Mini Loader software resides in the `/tftpboot` directory on the UNIX workstation to which you downloaded the software. See Section 4.6.4 in this manual for instructions on how to create the `/tftpboot` directory (if necessary) and how to move the Mini Loader software into that directory.

Once the Mini Loader software is in the `/tftpboot` directory, enter the following parameters at the prompt:

`operation upgrade` *`<remotehost>:<full path to remotefile>`*

In the above example, you must enter the IP address of the UNIX workstation to which you downloaded the Mini Loader in place of *<remotehost>*. You must enter the Mini Loader filename in place of *<full path to remotefile>*. Enter something similar to the following at the prompt:

`operation upgrade 204.95.89.91:foreworks-loader.tar`

The switch will initiate a TFTP session with the host workstation, and you will see something similar to the following:

```
Will upgrade directly to flash
{Checking free space on flash}
Writing flash file foreos.exe
```

If the upgrade is successful, the above messages will be followed by "`switch upgrade was successful.`" You will then be prompted to reboot the switch.

```
Reboot the switch [y]?
```

Type **n** and press **<ENTER>** at the prompt.

If the upgrade fails for some reason, try again. First, however, delete the file from FLASH called `UPGRADE/foreos.exe` that will have been created (but is not complete) during the failed upgrade.

If you have problems with the Mini Loader upgrade, contact FORE Systems' Technical Assistance Center.

NOTE

After a successful upgrade, `LOADER` points to an image for the Mini Loader in FLASH. If something causes your switch to reboot, it will do so using the Mini Loader software. However, if the switch is rebooted and there is also a `CURRENT` file that points to an existing `foreos.exe`, the switch will boot with that software image rather than with the Mini Loader.

4.2.4 Deleting the Active Switch Software

Now that the Mini Loader is safely loaded on your switch, you can delete the active version of switch software from FLASH. Deleting this file and the directory in which it resides will not affect the operation of your switch. The switch software will continue to run in active memory after its image is deleted from FLASH. Enter something similar to the following at the prompt:

```
operation flash delete ft600.x/foreos.exe

operation flash delete ft600.x
```

These commands will delete the image of the active version of switch software in FLASH, as well as the directory in which it is contained. The parameter `ft600.x` will vary depending on which version of switch software you are currently using.

At this point, you should upgrade your switch (see Section 4.3).

4.3 Performing the Software Upgrade

The software upgrade is performed using the **`operation upgrade`** command in AMI. The default underlying file transfer mechanism used in the upgrade is TFTP. You can change this transfer protocol to FTP by using the **`configuration system protocol`** command. (See Part 2 of the *AMI Configuration Commands Reference Manual* for more information about this command. Also, consult the man page for FTP or TFTP on the host machine for more information about these protocols.)

If you are using TFTP, then follow the upgrade instructions in Section 4.3.1 in this manual. If you are using FTP, then follow the upgrade instructions in Section 4.3.2 in this manual.

NOTE The *ESX*-3000 supports *ForeThought* 6.0 or later.

4.3.1 Upgrading the Software Using TFTP

TFTP can run in “secure” or “unsecure” mode, and it is assumed that your TFTP server is running in secure mode. Therefore, if TFTP is to run properly between, the file(s) being transferred must reside in the `/tftpboot` directory on the source machine (see Section 4.6.4 in this manual for more information).

To perform an upgrade, the switch initiates a TFTP session with the specified host, which searches for the file requested. The host, which is running TFTP, looks for the file in `/tftpboot`. The TFTP process on the server automatically adds “`/tftpboot`” in front of the path or filename specified by the client.

For example, issuing **`operation upgrade 169.144.3.54:esx-3000_P5_6.0.0_1.xxxxx`** causes the TFTP server to locate and transfer the file `/tftpboot/esx-3000_P5_6.0.0_1.xxxxx`. For this reason, it is imperative that you place the upgrade file in the `/tftpboot` directory on the workstation to which you downloaded or extracted the file. If this directory does not already exist, it is likely that TFTP is not running on the workstation. See Section 4.6.4 in this manual for instructions on setting up a TFTP server and placing the upgrade file in the `/tftpboot` directory.

Once you have verified your TFTP server and placed the software upgrade file, you need to invoke the upgrade process on the SCP. Log in to AMI and enter the following parameters at the prompt:

```
operation upgrade ?
```

This will display the specific parameters that you need to enter as follows:

upgrade *<remotehost>*:*<full path to remotefile>*

In the *<remotehost>* field, enter the remote machine name or IP address of the workstation which holds the upgrade file. In the *<full path to remotefile>* field, enter ONLY the filename of the upgrade file.

NOTE The *<full path to remotefile>* is the name of the uncompressed file.

For example, you would enter something similar to the following:

operation upgrade 169.144.3.54:esx-3000_P5_6.0.0_1.xxxxx

You should receive messages similar to the following:

```
Will upgrade directly to flash
{Transfer successful.}

Notice:  A backup cdb for this version of software should be made
in case a downgrade to this version is performed in the future.
```

When prompted to back up the CDB, type **y** and press **<ENTER>**.

```
Do you wish to back up the cdb [y]? y
```

When prompted to enter the host file name, you would enter something similar to the following:

```
Enter host file:169.166.3.56:myswitch.cdb
```

To use the new version of software that you have just loaded, type **y** and press **<ENTER>** or simply press **<ENTER>** to reboot.

```
Reboot the switch[y]? y
```

If the software file that was downloaded does not match the processor type (P5), the following messages display:

```
Will upgrade directly to flash
{Incompatible software version}
Transfer failed
```

NOTE

If you do not have more than one version of software installed, you can skip this note. If you do have more than one version of software installed, you have an important decision to make now. At this point, the boot pointer has the new software's filename in it. A reboot will load the new version of software from the FLASH, and the switch will run this version when it comes up. If you wish, however, you can still run the old version of software. If you want to use the old version and change to the new version at a later time, enter **n** at the reboot prompt and follow the instructions in Section 4.4 in this manual.

Once the SCP reboots, all active AMI sessions will be terminated on the SCP. You will need to log in to AMI again if you want to begin another session.

NOTE

If something went wrong during the upgrade process, a new directory named `UPGRADE` will appear in the FLASH file system and you will not be prompted with the "`Reboot the switch [y]?`" message.

If the upgrade is unsuccessful or if you have any other problems with the upgrade, please contact FORE Systems' Technical Assistance Center.

4.3.2 Upgrading the Software Using FTP

To upgrade the software using FTP, log in to AMI and enter the following parameters at the prompt:

`operation upgrade ?`

This will display the specific parameters that you need to enter as follows:

`upgrade` *`<remotehost>`*`:`*`<full path to remotefile>`*

In the *`<remotehost>`* field, enter the remote machine name or IP address of the workstation which holds the upgrade file. In the *`<full path to remotefile>`* field, enter the full filename of the upgrade file.

NOTE The *`<full path to remotefile>`* is the name of the uncompressed file.

For example, you would enter something similar to the following:

`operation upgrade 169.144.3.54:esx-3000_P5_6.0.0_1.xxxxx`

Since you are using FTP, you are prompted for the remote userid and password of the remote host from which you are retrieving the upgrade file. For example:

`operation upgrade 169.144.3.54:esx-3000_P5_6.0.0_1.xxxxx`

```
Will upgrade directly to flash
remote userid: <remote userid>
remote password: <remote password>
```

Once the proper userid and password are entered, you should receive messages similar to the following:

```
Will upgrade directly to flash
{Transfer successful.}

Notice:  A backup cdb for this version of software should be made
in case a downgrade to this version is performed in the future.
```

When prompted to back up the CDB, you should type **y** and press **<ENTER>**.

```
Do you wish to back up the cdb [y]? y
```

When prompted for the host file name, you would enter something similar to the following:

```
Enter host file:169.166.3.56:myswitch.cdb
```

To use the new version of software that you have just loaded, type **y** and press **<ENTER>** or simply press **<ENTER>** to reboot.

```
Reboot the switch[y]? y
```

If the software file that was downloaded does not match the processor type (P5), the following messages display:

```
Will upgrade directly to flash
{Incompatible software version}

Transfer failed
```

NOTE

If you do not have more than one version of software installed, you can skip this note. If you do have more than one version of software installed, you have an important decision to make now. At this point, the boot pointer has the new software's filename in it. A reboot will load the new version of software from the FLASH, and the switch will run the upgraded version when it comes up. If you wish, however, you can still run the old version of software. If you want to use the old version and change to the new version at a later time, enter **n** at the reboot prompt and follow the instructions in Section 4.4 in this manual.

Once the SCP reboots, all active AMI sessions will be terminated on the SCP. You will need to log in to AMI again if you want to begin another session.

NOTE

If something went wrong during the upgrade process, a new file named `UPGRADE` appears in the FLASH file system and you are not prompted with the "`Reboot the switch [y]?`" message.

If the upgrade is unsuccessful or if you have any other problems with the upgrade, please contact FORE Systems' Technical Assistance Center.

4.4 Changing between Multiple Versions of Software

It is possible to select between multiple versions of installed software at any time (not just during an upgrade procedure).

CAUTION

Although you can change the version of software which will run on the *ESX*-3000, it is not recommended that this feature be used except when absolutely necessary. The different software versions vary in functionality, and switching between these versions can result in the loss of certain configuration information on the switch.

You can display all the versions that are installed by typing the following:

```
myswitch::operation flash> dir
FT600.00
CURRENT
FT600.25
```

However, in this list, `CURRENT` is simply a pointer to the version that will be used as the current switch software during a reboot. To display the version to which `CURRENT` is pointing, as well as all the versions that are installed, type the following:

```
myswitch::operation> version
Software versions installed : FT600.00 FT600.25
Current software version is FT600.00
```

Notice that no parameter for **`version`** was specified above. If no parameter is specified, it will list the current and installed versions, but will not change anything.

In this example, to change the current version of software from `FT600.00` to `FT600.25`, type the following:

```
myswitch::operation> version FT600.25
Current software version is FT600.25
Software versions installed : FT600.25 FT600.00
```

NOTE

By using the **`operation version`** command and specifying a version, you change the version to which `CURRENT` is pointing.

At this point, the switch is still running `FT600.00`, but `CURRENT` is pointing to `FT600.25`. To make the change complete, enter the following:

```
myswitch::operation> reboot
Are you sure you want to reboot this switch [n]? y
```

When the SCP reboots, it will look to see to which version `CURRENT` is pointing. In this case, it will see `FT600.25` and boot using that version.

4.5 Booting and Upgrading with the Mini Loader

NOTE

The instructions in this section are only necessary if you have deleted your active version of switch software from FLASH memory AND lost power to your switch before successfully completing a full software upgrade.

A Mini Loader session can only be accessed via the serial port of the switch. This session can be opened on a terminal connected directly to the switch, via a modem connected to the switch's serial port, through a telnet session to a workstation whose serial port is connected to the switch, etc.

If you are connecting to the switch via a terminal connected to the serial port, make sure you are using a true, "dumb" terminal or a true VT-100 terminal emulation program. If you are connecting to the switch via a modem, see Section 2.7 for more information about modem configuration. If you want to telnet to a host whose serial port is connected to the switch, one way to start a session with the switch is by using the **`tip`** command.

`tip` establishes a full-duplex terminal connection to a remote host. Once the connection is established, a remote session using **`tip`** behaves like an interactive session on a local terminal.

Once you telnet to the connected host, enter the following at the host prompt:

```
host#  tip -9600 /dev/ttya
```

where `9600` represents the speed to which the switch's serial port has been set and the "`a`" in `ttya` represents the serial port of the workstation having the connection to the serial port of the switch (this value could also be "`b`," as in `ttyb`).

If you were already connected to the switch via the serial port before the switch lost power, you should see something similar to the following when the Mini Loader boots the switch:

```
Booting VXWORKS

VxWorks System Boot

Copyright 1984-1996  Wind River Systems, Inc.

CPU: Motorola CPV5000 SBC
Version: 5.3.1
BSP version: 1.0/0
Creation date: Nov 25 1998, 15:01:09
Fore Systems Boot Loader: 6.0.0 (32627)

Press any key to stop auto-boot...
0
auto-booting...

boot device          : fs
processor number     : 0
host name            : host
file name            : /CURRENT/FOREOS.EXE
flags (f)            : 0x0

Decompressing....done.
SBLoader successfully loaded.

Loading fs:/LD6.0/foreos.exe.
Decompressing fs:/LD6.0/foreos.exe ....done.
Starting at 0x108000...

Adding 2670 symbols for standalone.
Done...

VxWorks version: 5.3.1
Kernel version: WIND version 2.5
CPU: Motorola CPV5000 SBC
BSP version: 1.0
Creation date: Dec 30 1998, 19:03:08

Foreworks_6.0.0 (1.34371)
Copyright (c) 1996 FORE Systems, Inc.
```

```
All Rights Reserved

VxWorks
Copyright (c) 1984-1996 Wind River Systems, Inc.
All Rights Reserved

Attaching network interface lo0... done.
Attaching network interface ei0... done.

loader::>
```

If you connect to the switch via the serial port after the switch has lost power, you will probably see nothing on the terminal you are using. Press **<ENTER>** to see the `loader::>` prompt.

If the Mini Loader does not boot automatically (i.e., you do not see the `loader::>` prompt within one minute), see Section 4.2.2 for information about manually booting the switch from FLASH. If you cannot get the switch to boot from FLASH, see Section 4.6 for information on using bootp.

Once the switch boots successfully, however, you will see the `loader::>` prompt. If you are using XMODEM, you can skip to Section 4.5.3 and proceed with the upgrade. If you are using TFTP or FTP, you must configure several parameters on the switch as described in the next two sections before you can upgrade with the Mini Loader.

4.5.1 Setting the IP Address of the Switch

When using TFTP or FTP, the first thing you need to do is set the IP address of the switch being upgraded. Enter the following parameters at the `loader::>` prompt:

`configuration ip` *`<ipaddr>`* [**`-n`** *`<netmask>`*] [**`-b`** *`<broadcast>`*]

where *`<ipaddr>`* is the IP address of the switch to be upgraded, *`<netmask>`* is the IP netmask of the subnet upon which your switch resides, and *`<broadcast>`* is the broadcast IP address of your network.

4.5.2 Setting the Gateway Address

If the switch you are trying to upgrade is on a different subnet than the host from which you will load the upgrade file, you must provide a proper gateway address in order for the switch to find the host. Enter the following parameters at the `loader::>` prompt:

`configuration gateway` *`<ipaddr>`*

where *`<ipaddr>`* is the IP address of the gateway leading out of the subnet on which the switch resides (see Figure 4.1).

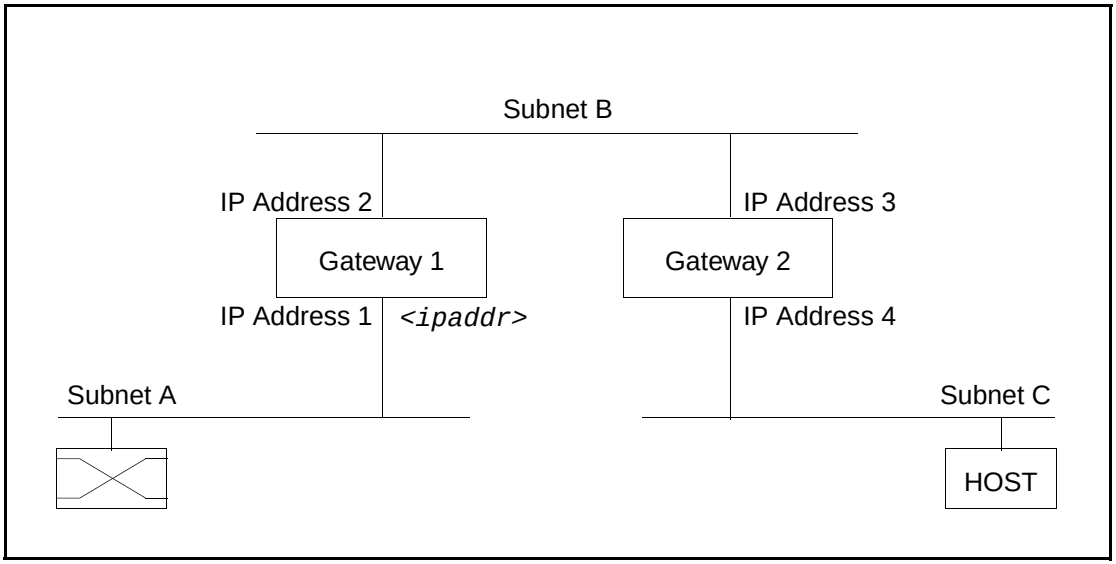

Figure 4.1 - Example of Switch and Host on Different Subnets

4.5.3 Performing the Upgrade

Once you have set the parameters above and cleaned out the FLASH, you may perform the upgrade. Enter the following parameters at the `loader::>` prompt:

upgrade [**-d ftp | tftp | xmodem**] [**-bf** *<bootfile>*] [**-h** *<serverAddr>*]

The parameters in this example are defined as follows:

Parameter	Description
ftp | tftp | xmodem	Indicates the transfer mechanism used by Mini Loader to perform the upgrade. **ftp** forces Mini Loader to use FTP. **tftp** forces Mini Loader to use TFTP. **xmodem** forces Mini Loader to use XMODEM. When upgrading over XMODEM, status messages are not output during the upgrade progress. The progress of the transfer should be monitored from the host transferring the tar file.
bootfile	Indicates the full name of the upgrade file (which should be preceded by a backslash). This parameter is not used for XMODEM transfers.
serverAddr	Indicates the IP address of the UNIX workstation on which the upgrade file resides. This parameter is not used for XMODEM transfers.

For example, you might enter something similar to the following at the `loader::>` prompt:

upgrade -d tftp -bf /S_ForeThought_6.0.0_1.26501.tar -h 169.144.3.54

You should see something similar to the following:

```
free flash space = 11147264
Transferring file version to memory (17 bytes)
Transferring file foreos.exe to memory (2682698 bytes)
Transferring file sbloader.gz to memory (21558 bytes)
Writing file foreos.exe to flash (2682698 bytes)
Creating flash directory FT6.0
Creating flash file fs:/current
```

Enter the following at the `loader::>` prompt to ensure that an image of the upgrade file resides in FLASH:

flash dir

You should see something similar to the following:

```
<DIR> LD100.0
<DIR> FT600.12
      CURRENT
```

If the upgrade filename appears above the `CURRENT` pointer in FLASH, the upgrade was successful. You should now reboot the switch to begin using the new version of *ForeThought* software. Enter the following command at the `loader::>` prompt:

`reboot`

The switch will reboot using the upgraded software. If you have any problems with the upgrade, please contact FORE Systems' Technical Assistance Center.

4.6 Using Bootp to Download Software to the Switch

NOTE The steps provided in this section need to be performed only if your SCP fails to boot from FLASH.

NOTE Booting via bootp does not upgrade the software on your switch. If you use bootp to start your switch, then you must upgrade the software image in FLASH memory according to the instructions in Section 4.3.

If your SCP fails to boot from FLASH, and no bootp server is available, the output on your terminal will look similar to the following:

```
Switch Control Processor-128  May 17 1998
Copyright 1994, FORE Systems, Inc.
Copyright 1992, Intel Corporation

Attempt Ethernet boot
ie_attach: ie0  ethernet address 00:20:48:20:00:19
BootP:: Waiting 68 seconds.
BootP:: Waiting 142 seconds.
BootP:: Waiting 202 seconds.“BootP...” in display
BootP:: Waiting 262 seconds.
BootP:: Waiting 322 seconds.
No response to BootP

Attempt Ethernet boot
ie_attach: ie0  ethernet address 00:20:48:20:00:19
BootP:: Waiting 68 seconds.
...
```

This cycle continues indefinitely until the switch is powered down or reset. If you see output similar to this after an upgrade, then you need to set up a bootp server as detailed in the following sections.

4.6.1 Bootp Overview

The SCP on an *ESX*-3000 comes with its hardware address (Ethernet MAC address) burned in from the factory, but it does not come preconfigured with an IP address. Any time that the switch is turned on, the SCP attempts to boot from FLASH memory.

If the SCP cannot boot from its FLASH (e.g., the FLASH has recently been initialized or the switch software image in the FLASH is corrupt), it attempts to locate a bootp server on its Ethernet interface.

The SCP broadcasts its Ethernet MAC address in a bootp datagram. Bootp servers on the network that receive that broadcast look up that MAC address in their bootptab file. If they find an entry for that MAC address, they broadcast a reply to the SCP that contains a pointer to a switch software image file residing on the bootp server.

When the SCP sees the bootp reply, it initiates a TFTP session with the bootp server using the path and filename returned in the datagram from the server.

4.6.2 Setting Up a bootp Server

If the process described above is to happen, you need to provide the bootp server with the SCP's Ethernet MAC address and the path to the switch software image.

Before the bootp server will work, you must add or uncomment the following line in `/etc/inetd.conf`:

```
bootps dgram udp wait root /etc/bootpd -d4 /etc/bootptab
```

with the `bootpd` and the `bootptab` files in the `/etc` directory. Also, the following line must appear in `/etc/services`:

```
bootp          67/udp          bootps
```

Before any of the above changes can take effect, `inetd` must re-read the configuration file.

NOTE

If you need to set up a TFTP server, as described in Section 4.6.4 in this manual, the following process is not necessary at this time. Instead, make `inetd` re-read its configuration file after setting up your server.

Determine the process number of `inetd` by entering the following:

```
host: ps -aux | grep inetd
```

Something similar to the following will be displayed:

```
root       216  0.0  0.0   48    0 ?  IW   Jan 27  0:14 inetd
```

where `216` represents the process number of `inetd`.

Now that you know the process number, enter the following command line to make `inetd` re-read its configuration file:

```
host: kill -HUP 216
```


4.6.3 Adding a Switch Entry in the bootptab File

On the workstation that is the bootp server, add the following lines to `/etc/bootptab`:

NOTE The lines given here are an example. See the descriptions that follow for an explanation of the values that you need to enter on your SCP.

```
myswitch:\
            :ht=ether:\
            :ha=002048200019:\
            :sm=255.255.255.0:\
            :bf=upgrade-file:\
            :ip=123.123.123.123:
```

NOTE Make sure the last line added to `bootptab` ends in a colon (:) and not a backslash (\). Otherwise, that line will merge with the next entry, causing your switch to cycle in its attempts to find a bootp server.

NOTE

If the upgrade file lies under a directory within the `/tftpboot` directory, include the relative file path to the upgrade file. For example, if upgrade file lies in `/tftpboot/ft60/upgrade-file`, then `bf=/ft60/upgrade-file`. This is also true when issuing **`oper upgrade`**.

The variables in the previous example are defined as follows:

Variables	Description
myswitch	Indicates the name you have assigned to your SCP.
ht	Indicates the hardware type. For the purposes of switch software image loading, this is **`ether`** (stands for Ethernet).
ha	Indicates the hardware address. This is the Ethernet MAC address of your SCP that is burned in from the factory. If you connect a terminal device to the SCP's serial port, you will see the Ethernet MAC address displayed during the EPROM boot sequence.
sm	Indicates the subnet mask. This is the subnet mask for your network.
bf	Indicates the bootfile. This is *`<your boot image file name>`*.
ip	Indicates the IP address of the SCP's Ethernet interface.

NOTE

For more information about bootp, please refer to RFC-1048 and RFC-951.

Once these lines are added, the bootp server is able to tell your SCP where to find the switch software image to be downloaded. The next step in performing the upgrade is to set up a workstation as a tftpboot server and put the upgrade file (the line indicated by `bf` in the previous example) there.

4.6.4 Setting Up a TFTP Server

To set up a TFTP server, on a SunOS 4.1.x system, perform the following steps:

NOTE This procedure only has to be performed the first time that the switch is turned on and each SCP is upgraded. The next time that the software is upgraded, put the upgrade file in `/tftpboot`.

1. In `/etc/inetd.conf`, uncomment the last line shown below so that the file appears as follows:

```
# Tftp service is provided primarily for booting.  Most sites
# run this only on machines acting as “boot servers.”
# Since these can be security holes, they are commented out by default.
#
tftp   dgram   udp    wait    root    /usr/etc/in.tftpd     in.tftpd /tftpboot
```

NOTE `-s /tftpboot` in the line above indicates the server is running secure TFTP. If `-s /tftpboot` does not appear, many of the command examples in this chapter are invalid.

2. Add the following line to `/etc/services`:

```
tftp          69/udp
```

3. Set up the `tftpboot` directory with the following command lines:

```
host: mkdir  /tftpboot
host: cp <upgrade-file>  /tftpboot
```

4. At the root level, determine the process number of `inetd` by entering the following:

```
host: ps -aux | grep inetd
```

Something similar to the following will be displayed:

```
root       216  0.0  0.0   48    0 ?  IW   Jan 27  0:14 inetd
```

where `216` represents the process number of `inetd`.

5. Enter the following command to make `inetd` re-read its configuration file:

```
host: kill -HUP 216
```

APPENDIX A Hardware Specifications

This appendix provides hardware and general specifications for the *ESX*-3000 ATM switch and port cards.

A.1 *ESX*-3000 Specifications

The *ESX*-3000 provides high-performance, high-reliability ATM connectivity for backbone applications, and internetworking applications. Together with the ATM port cards, these switches meet the networking demands of today's distributed, time-critical applications.

The *ESX*-3000 incorporates a single switch module with either a 10 Gbps or 20 Gbps configuration providing up to 128 ports of connectivity at speeds from 155 Mbps to 622 Mbps.

This section provides the operating, environmental, and general specifications, as well as the hardware requirements necessary to use the *ESX*-3000.

NOTE The *ESX*-3000 hardware components are specific to the switch and, therefore, do not operate in other FORE Systems switches.

The *ESX*-3000 has the following specifications:

Hardware Specifications	
Switching Fabric	10 or 20 Gbps, non-blocking
Number of Ports	up to 128 ports
Traffic Policing	UPC, dual leaky bucket support
Switch Transit Delay	15 - 20 microseconds
Connection Setup Time	estimated 6 milliseconds, >825 calls / second without release
Maximum Port Speed	622 Mbps (OC-12c)
Ethernet Interface	Standard RJ-45 connector, 10 / 100
Serial Interface	DB-9 male connector
General Specifications	
Power	3 x 115 to 240VAC @ 60 / 50Hz, 12 amps maximum
Dimensions	H: 20.969” (12u) - includes mounting shelf W: 19” (48.26 cm) D: 23.7” (60.20 cm) - without cables
Weight	165 lbs. (75 kg) - fully configured switch including mounting shelf
Standards Compliance	ITU I.361 ATM Layer, ATM Forum UNI v3.0 / 3.1 / 4.0
Emissions	FCC Part 15, Class A; EN55022, Class A; VCCI, Class A
Safety	UL 1950, 3rd Edition; EN60950; IEC 950, Amendment 4; EN60825-1; 21 CFR 1040
Operating Temperature	0°C to 40°C up to 5,000 ft
Operating Humidity	5 to 85% relative humidity, non-condensing at 40°C
Storage Temperature	-40°C to 70°C up to 40,000 ft
Storage Humidity	5 to 95% relative humidity, non-condensing at 50°C
Thermal Dissipation	6,500 BTU / HR

A.2 *ESX*-3000 ATM Port Cards

The *ESX*-3000 port cards are the physical ATM port interface cards that provide LAN/WAN connectivity to other ATM switches, ATM-compatible desktop computers and servers, hubs, routers, multiplexers, and carrier ATM services. Currently for the *ESX*-3000, port cards are available to provide ATM connections ranging from 155 Mbps to 622 Mbps over fiber-optic media.

This section details the technical specifications for each of the port cards. All port cards are hot-swappable, reducing network and maintenance downtime. For complete information about hot-swapping port cards, please refer to Chapter 3, ”Hardware Maintenance.”

A.2.1 622 Mbps OC-12c/STM-4c MM Port Cards

The following specifications apply to the 622 Mbps OC-12c/STM-4c multimode fiber two- and four-port cards:

Description	Specification
Port Capacity	Two or four SONET/SDH ports per card (depending upon configuration)
Data Rate	622.08 Mbps
Output Buffer	256K cells (32K per port)
Unicast Connection	up to 24K VCs (6K VCs per port)
Multicast Connection	up to 4K VCs (1024 VCs per port)
Media	Multimode fiber
Average Line Length	~.5 km
Connectors	SC
Line encoding	Non-Return to Zero (NRZ)
Framing	STS-12c/STM-4c
Clock Accuracy	±20 ppm
Timing	Primary and secondary 8kHz reference from internal (default) or network
Loopbacks	Transmit and receive loopbacks
Power	-14 to -20 dBm transmit -14 to -26 dBm receive 0 to 6 dB path attenuation
Core Diameter	62.5 µm
Fiber Diameter	125 µm
Wavelength	1,270 - 1,380 nm
Statistics/Alarms	SONET/SDH statistics include Loss of Signal (LOS), Loss of Frame (LOF), Loss of Pointer (LOP), Far End Block Errors (FEBE), Alarm Indication Signal (AIS), Far End Receive Failure (FERF), Yellow Alarm, Bit Interleaved Parity (Line BIP-96, Section BIP-8, Path BIP-8) errors, Header Check Sequence (HCS) errors
Compliance	ATM Forum AF-PHY-0046.000, ITU-T I.432, G.707, G.783, ANSI T1.105-1995, T1.646-1995, Bellcore GR-253-CORE

A.2.2 622 Mbps OC-12c/STM-4c SM Port Card

The following specifications apply to the 622 Mbps OC-12c/STM-4c single mode, intermediate reach fiber port card:

Description	Specification
Port Capacity	Two SONET/SDH ports per card
Data Rate	622.08 Mbps
Output Buffer	256K cells (32K per port)
Unicast Connection	up to 24K VCs (6K VCs per port)
Multicast Connection	up to 4K VCs (1024 VCs per port)
Media	Single mode intermediate reach fiber
Average Line Length	~15 km
Connectors	SC
Line encoding	Non-Return to Zero (NRZ)
Framing	STS-12c/STM-4c
Clock Accuracy	±20 ppm
Timing	Primary and secondary 8kHz reference from internal (default) or network
Loopbacks	Transmit and receive loopbacks
Power	-8 to -15 dBm transmit power -8 to -28 dBm receive sensitivity 0 to 12 dB path attenuation
Core Diameter	10 µm
Fiber Diameter	125 µm
Wavelength	1,310 nm
Statistics/Alarms	SONET/SDH statistics include Loss of Signal (LOS), Loss of Frame (LOF), Loss of Pointer (LOP), Far End Block Errors (FEBE), Alarm Indication Signal (AIS), Far End Receive Failure (FERF), Yellow Alarm, Bit Interleaved Parity (Line BIP-96, Section BIP-8, Path BIP-8) errors, Header Check Sequence (HCS) errors
Compliance	ATM Forum AF-PHY-0046.000, ITU-T I.432, G.707, G.783, ANSI T1.105-1995, T1.646-1995, Bellcore GR-253-CORE

A.2.3 622 Mbps OC-12c/STM-4c SM/OC-12c/STM-4c MM Port Card

The 622 Mbps OC-12c/STM-4c SM/OC-12c/STM-4c MM Port Card contains one OC-12c/STM-4c single mode port (D1) and three OC-12c/STM-4c multimode ports (A1, B1, and C1).

The following specifications apply to port D1:

Description	Specification
Port Capacity	One SONET/SDH ports per card
Data Rate	622.08 Mbps
Output Buffer	256K cells (32K per port)
Unicast Connection	up to 24K VCs (6K VCs per port)
Multicast Connection	up to 4K VCs (1024 VCs per port)
Media	Single mode intermediate reach fiber
Average Line Length	~15 km
Connectors	SC
Line encoding	Non-Return to Zero (NRZ)
Framing	STS-12c/STM-4c
Clock Accuracy	±20 ppm
Timing	Primary and secondary 8kHz reference from internal (default) or network
Loopbacks	Transmit and receive loopbacks
Power	-8 to -15 dBm transmit power -8 to -28 dBm receive sensitivity 0 to 12 dB path attenuation
Core Diameter	10 µm
Fiber Diameter	125 µm
Wavelength	1,310 nm
Statistics/Alarms	SONET/SDH statistics include Loss of Signal (LOS), Loss of Frame (LOF), Loss of Pointer (LOP), Far End Block Errors (FEBE), Alarm Indication Signal (AIS), Far End Receive Failure (FERF), Yellow Alarm, Bit Interleaved Parity (Line BIP-96, Section BIP-8, Path BIP-8) errors, Header Check Sequence (HCS) errors
Compliance	ATM Forum AF-PHY-0046.000, ITU-T I.432, G.707, G.783, ANSI T1.105-1995, T1.646-1995, Bellcore GR-253-CORE

The following specifications apply to ports A1, B1, and C1:

Description	Specification
Port Capacity	Three SONET/SDH ports per card
Data Rate	622.08 Mbps
Output Buffer	256K cells (32K per port)
Unicast Connection	up to 24K VCs (6K VCs per port)
Multicast Connection	up to 4K VCs (1024 VCs per port)
Media	Multimode fiber
Average Line Length	~.5 km
Connectors	SC
Line encoding	Non-Return to Zero (NRZ)
Framing	STS-12c/STM-4c
Clock Accuracy	±20 ppm
Timing	Primary and secondary 8kHz reference from internal (default) or network
Loopbacks	Transmit and receive loopbacks
Power	-14 to -20 dBm transmit -14 to -26 dBm receive 0 to 6 dB path attenuation
Core Diameter	62.5 µm
Fiber Diameter	125 µm
Wavelength	1,270 - 1,380 nm
Statistics/Alarms	SONET/SDH statistics include Loss of Signal (LOS), Loss of Frame (LOF), Loss of Pointer (LOP), Far End Block Errors (FEBE), Alarm Indication Signal (AIS), Far End Receive Failure (FERF), Yellow Alarm, Bit Interleaved Parity (Line BIP-96, Section BIP-8, Path BIP-8) errors, Header Check Sequence (HCS) errors
Compliance	ATM Forum AF-PHY-0046.000, ITU-T I.432, G.707, G.783, ANSI T1.105-1995, T1.646-1995, Bellcore GR-253-CORE

A.2.4 155 Mbps OC-3c/STM-1 MM Port Card

The following specifications apply to the 155 Mbps OC-3c/STM-1 port card:

Description	Specification
Port Capacity	Twelve SONET/SDH ports card
Data Rate	155.52 Mbps
Output Buffer	32,768 cell capacity
Media	Multimode fiber
Maximum Line Length	~2 km
Connectors	SC
Line Encoding	Non-Return to Zero (NRZ)
Framing	STS-3c/STM-1
Clock Accuracy	±20 ppm
Timing	Per-port network timing
Loopbacks	Transmit and receive loopbacks
Power	-14 to -20 dBm transmit, -14 to -30 dBm receive, 0 to 10 dB path attenuation
Core Diameter	62.5 µm
Fiber Diameter	125 µm
Wavelength	1310 nm
Statistics/Alarms	SONET/SDH statistics include Loss of Signal (LOS), Loss of Frame (LOF), Loss of Pointer (LOP), Far End Block Errors (FEBE), Alarm Indication Signal (AIS), Far End Receive Failure (FERF), Bit Interleaved Parity errors (Line BIP-24, Section BIP-8, Path BIP-8), Header Check Sequence (HCS) errors
Compliance	ATM Forum STS-3c UNI v3.1, ITU-T I.432, ANSI T1E1.2/93-020, T1S1/92-185, ITU-T G.957, GR-253-CORE

A.2.5 155 Mbps STS-3c/STM-1 UTP Port Card

The following specifications apply to the 155 Mbps STS-3c / STM-1 UTP port card:

Description	Specification
Port Capacity	Sixteen SONET / SDH ports per card
Data Rate	155.52 Mbps
Output Buffer	32,768 cell capacity
Media	Category 5 Unshielded Twisted Pair (UTP)
Maximum Line Length	100 m
Connectors	RJ-45
Line Encoding	Non-Return to Zero (NRZ)
Framing	STS-3c / STM-1
Clock Accuracy	±20 ppm
Timing	Per-port network timing
Loopbacks	Transmit and receive loopbacks
Statistics / Alarms	SONET / SDH statistics include Loss of Signal (LOS), Loss of Frame (LOF), Loss of Pointer (LOP), Far End Block Errors (FEBE), Alarm Indication Signal (AIS), Far End Receive Failure (FERF), Bit Interleaved Parity errors (Line BIP-24, Section BIP-8, Path BIP-8), Header Check Sequence (HCS) errors
Compliance	ATM Forum STS-3c UNI v3.1, ITU-T I.432, ANSI T1E1.2 / 93-020, T1S1 / 92-185, ATM Forum AF-PHY-0015.000

Acronyms

The networking terms in the following list are defined in the Glossary of this manual. Glossary items are listed alphabetically according to the full term.

AAL	ATM Adaptation Layer
ABR	Available Bit Rate
ACM	Address Complete Message
ACR	Allowable Cell Rate
ADPCM	Adaptive Differential Pulse Code Modulation
AHFG	ATM-attached Host Functional Group
AIMUX	ATM Inverse Multiplexing
AIS	Alarm Indication Signal
AMI	Alternate Mark Inversion
AMI	ATM Management Interface
ANSI	American National Standards Institute
APCM	Adaptive Pulse Code Modulation
API	Application Program Interface
APP	Application Program
APS	Automatic Protection Switching
ARP	Address Resolution Protocol
ASCII	American Standard Code for Information Interchange
ATDM	Asynchronous Time Division Multiplexing
ATM	Asynchronous Transfer Mode
AUI	Attachment User Interface
B8ZS	Bipolar 8 Zero Substitution
BCOB	Broadband Connection Oriented Bearer
BCOB-A	Bearer Class A
BCOB-C	Bearer Class C
BCOB-X	Bearer Class X
BECN	Backward Explicit Congestion Notification
BER	Bit Error Rate
BES	Bursty Errored Seconds
BGP	Border Gateway Protocol
B-ICI	B-ISDN Inter-Carrier Interface.
BIP	Bit Interleaved Parity
B-ISDN	Broadband Integrated Services Digital Network
B-ISUP	Broadband ISDN User's Part

BITS	Building Integrated Timing Supply
BNC	Bayonet-Neill-Concelman
BPDU	Bridge Protocol Data Unit
bps	Bits per Second
BPV	Bipolar Violation
B-TE	Broadband Terminal Equipment
BUS	Broadcast and Unknown Server
CAC	Connection Admission Control
CAS	Channel Associated Signaling
CBDS	Connectionless Broadband Data Service
CBR	Constant Bit Rate
CCITT	International Telephone and Telegraph Consultative Committee
CCS	Common Channel Signaling
CDV	Cell Delay Variation
CE	Connection Endpoint
CEI	Connection Endpoint Identifier
CES	Circuit Emulation Service
CGA	Carrier Group Alarm
CIP	Carrier Identification Parameter
CIR	Committed Information Rate
CLIP	Classical IP
CLP	Cell Loss Priority
CLR	Cell Loss Ratio-1-15
CLS	Connectionless service
CMIP	Common Management Interface Protocol
CMR	Cell Misinsertion Rate
CPE	Customer Premise Equipment
CRA	Cell Rate Adaptation
CRC	Cyclic Redundancy Check
CRS	Cell Relay Service
CS	Controlled Slip, **or** Convergence Sublayer
CSU	Channel Service Unit
CTD	Cell Transfer Delay
CTS	Clear To Send
DACS	Digital Access and Cross-Connect System
DARPA	Defense Advanced Research Projects Agency
DCC	Data Country Code
DCE	Data Communications Equipment
DCS	Digital Cross-connect System
DES	Destination End Station
DFA	DXI Frame Address
DLCI	Data Link Connection Identifier

DNS	Domain Naming System
DSn	Digital Standard n (n=0, 1, 1C, 2, and 3)
DSR	Data Set Ready
DTE	Data Terminal Equipment
DTR	Data Terminal Ready
EEPROM	Electrically Erasable Programmable Read Only Memory
EFCI	Explicit Forward Congestion Indication
EGP	Exterior Gateway Protocol
EIA	Electronics Industries Association
EISA	Extended Industry Standard Architecture
ELAN	Emulated Local Area Network
EMI	Electromagnetic Interference
EPROM	Erasable Programmable Read Only Memory
EQL	Equalization
ER	Explicit Rate
ES	End System, **or** Errored Second
ESF	Extended Super Frame
ESI	End System Identifier
EXZ	Excessive Zeroes (Error Event)
FC	Face Contact
FCC	Federal Communications Commission
FCS	Frame Check Sequence
FDDI	Fiber Distributed Data Interface
FDM	Frequency Division Multiplexing
FEBE	Far End Block Error
FEC	Forward Error Correction
FECN	Forward Explicit Congestion Notification
FERF	Far End Receive Failure
FIFO	First-In, First-Out
FRS	Frame-Relay Service
FTP	File Transfer Protocol
FT-PNNI	*ForeThought* PNNI
FUNI	Frame-Based UNI
GCAC	Generic Connection Admission Control
GCRA	Generic Cell Rate Algorithm
GFC	Generic Flow Control
HDB3	High Density Bipolar
HDLC	High Level Data Link Control
HEC	Header Error Control
HIPPI	High Performance Parallel Interface
HSSI	High-Speed Serial Interface
ICMP	Internet Control Message Protocol

IDU	Interface Data Unit
IEEE	Institute of Electrical and Electronics Engineers
IETF	Internet Engineering Task Force
ILMI	Interim Local Management Interface
IP	Internet Protocol
IPX	Internetwork Packet Exchange
IS	Intermediate system
ISDN	Integrated Services Digital Network
ISO	International Standards Organization
ITU-T	International Telecommunication Union Telecommunication
IWF	Interworking Function
IXC	Interexchange Carriers
JPEG	Joint Photographic Experts Group
Kbps	Kilobits per second
LAN	Local Area Network
LANE	LAN Emulation
LAPB	Link Access Procedure, Balanced
LATA	Local Access and Transport Area
LBO	Line Build Out
LCV	Line Code Violations
LE_ARP	LAN Emulation Address Resolution Protocol
LEC	LAN Emulation Client
LECS	LAN Emulation Configuration Server
LES	LAN Emulation Server
LLC	Logical Link Control
LOF	Loss Of Frame
LOP	Loss Of Pointer
LOS	Loss Of Signal
LSB	Least Significant Bit
MAC	Media Access Control
MAN	Metropolitan Area Network
MAU	Media Attachment Unit
MBS	Maximum Burst Size
MCDV	Maximum Cell Delay Variance
MCLR	Maximum Cell Loss Ratio
MCR	Minimum Cell Rate
MCTD	Maximum Cell Transfer Delay
MIB	Management Information Base
MIC	Media Interface Connector
MID	Message Identifier
MMF	Multimode Fiber Optic Cable
MPEG	Motion Picture Experts Group
MPOA	Multiprotocol over ATM

MSB	Most Significant Bit
MTU	Maximum Transmission Unit
NM	Network Management Entity
NML	Network Management Layer
NMS	Network Management Station
NNI	Network-to-Network Interface or Network Node Interface
NPC	Network Parameter Control
NRZ	Non Return to Zero
NRZI	Non Return to Zero Inverted
NSAP	Network Service Access Point
NTSC	National TV Standards Committee
OAM	Operation and Maintenance Cell
OC-n	Optical Carrier level-n
OID	Object Identifier
OOF	Out-of-Frame
OSI	Open Systems Interconnection
OSPF	Open Shortest Path First Protocol
OUI	Organizationally Unique Identifier
PAD	Packet Assembler Disassembler
PAL	Phase Alternate Line
PBX	Private Branch Exchange
PCI	Peripheral Component Interconnect
PCM	Pulse Code Modulation
PCR	Peak Cell Rate
PDN	Public Data Network
PDU	Protocol Data Unit
PHY	Physical Layer
ping	Packet Internet Groper
PLCP	Physical Layer Convergence Protocol
PLP	Packet Level Protocol
PM	Physical Medium
PMD	Physical Medium Dependent
PNNI	Private Network Node Interface or Private Network-to-Network Interface
PPP	Point-to-Point Protocol
PROM	Programmable Read-Only Memory
PRS	Primary Reference Source
PSN	Packet Switched Network
PT	Payload Type
PVC	Permanent Virtual Circuit (or Channel)
PVCC	Permanent Virtual Channel Connection
PVPC	Permanent Virtual Path Connection
QD	Queuing Delay
QoS	Quality of Service

RD	Routing Domain
RFCs	Requests For Comment
RFI	Radio Frequency Interference
RIP	Routing Information Protocol
RISC	Reduced Instruction Set Computer
RTS	Request To Send
SA	Source Address
SA	Source MAC Address
SAP	Service Access Point
SAR	Segmentation And Reassembly
SC	Structured Cabling, **or** Structured Connectors, **or** Stick and Click
SCR	Sustainable Cell Rate
SCSI	Small Computer Systems Interface
SDLC	Synchronous Data Link Control
SDU	Service Data Unit
SEAL	Simple and Efficient Adaptation Layer
SECAM	Systeme En Coleur Avec Memoire
SEL	Selector
SES	Severely Errored Seconds
SF	Super Frame
SGMP	Simple Gateway Management Protocol
SIR	Sustained Information Rate
SLIP	Serial Line IP
SMDS	Switched Multimegabit Data Service
SMF	Single Mode Fiber
SMTP	Simple Mail Transfer Protocol
SNA	Systems Network Architecture
SNAP	SubNetwork Access Protocol
SNI	Subscriber Network Interface
SNMP	Simple Network Management Protocol
SONET	Synchronous Optical Network
SPANS	Simple Protocol for ATM Network Signalling
SPARC	Scalable Processor Architecture Reduced instruction set Computer
SPE	Synchronous Payload Envelope
SPVC	Smart PVC
SS7	Signaling System No. 7
SSCOP	Service Specific Connection Oriented Protocol
SSCS	Service Specific Convergence Sublayer
ST	Straight Tip, **or** Stick and Turn
STM	Synchronous Transfer Mode

STP	Shielded Twisted Pair, Spanning Tree Protocol
STS	Synchronous Transport Signal
SVC	Switched Virtual Circuit (or Channel)
SVCC	Switched Virtual Channel Connection
SVPC	Switched Virtual Path Connection
TAXI	Transparent Asynchronous Transmitter / Receiver Interface
TC	Transmission Convergence
TCP	Transmission Control Protocol
TCP/IP	Transmission Control Protocol / Internet Protocol
TCR	Tagged Cell Rate
TCS	Transmission Convergence Sublayer
TDM	Time Division Multiplexing
TE	Terminal Equipment
TFTP	Trivial File Transfer Protocol
TM	Traffic Management
UAS	Unavailable Seconds
UBR	Unspecified Bit Rate
UDP	User Datagram Protocol
UNI	User-to-Network Interface
UPC	Usage Parameter Control
UTOPIA	Universal Test & Operations Interface for ATM
UTP	Unshielded Twisted Pair
VBR	Variable Bit Rate
VC	Virtual Channel (or Circuit)
VCC	Virtual Channel Connection
VCI	Virtual Channel Identifier
VCL	Virtual Channel Link
VINES	Virtual Network Software
VLAN	Virtual Local Area Network
VP	Virtual Path
VPC	Virtual Path Connection
VPDN	Virtual Private Data Network
VPI	Virtual Path Identifier
VPL	Virtual Path Link
VPN	Virtual Private Network
VPT	Virtual Path Terminator
VS/VD	Virtual Source / Virtual Destination
VT	Virtual Tributary
WAN	Wide-Area Network
ZBTSI	Zero Byte Time Slot Interchange

Glossary

10Base-T - a 10 Mbps baseband Ethernet specification utilizing twisted-pair cabling (Category 3, 4, or 5). 10BaseT, which is part of the IEEE 802.3 specification, has a distance limit of approximately 100 meters per segment.

802.1d Spanning Tree Bridging - the IEEE standard for bridging; a MAC layer standard for transparently connecting two or more LANs (often called subnetworks) that are running the same protocols and cabling. This arrangement creates an extended network, in which any two workstations on the linked LANs can share data.

802.3 Ethernet - the IEEE standard for Ethernet; a physical-layer standard that uses the CSMA/CD access method on a bus-topology LAN.

802.5 Token Ring - the IEEE physical-layer standard that uses the token-passing access method on a ring-topology LAN.

AAL Connection - an association established by the AAL between two or more next higher layer entities.

Adapter - A fitting that supplies a passage between two sets of equipment when they cannot be directly interconnected.

Adaptive Differential Pulse Code Modulation (ADPCM) - A technique that allows analog voice signals to be carried on a 32K bps digital channel. Sampling is done at 8Hz with 4 bits used to describe the difference between adjacent samples.

Adaptive Pulse Code Modulation (APCM) - A technique that effectively reduces occupied bandwidth per active speaker by reducing sampling rates during periods of overflow peak traffic.

Address - A unique identity of each network station on a LAN or WAN.

Address Complete Message (ACM) - A B-ISUP call control message from the receiving exchange to sending exchange indicating the completion of address information.

Address Mask - a bit mask used to identify which bits in an address (usually an IP address) are network significant, subnet significant, and host significant portions of the complete address. This mask is also known as the subnet mask because the subnetwork portion of the address can be determined by comparing the binary version of the mask to an IP address in that subnet. The mask holds the same number of bits as the protocol address it references.

Address Prefix - A string of 0 or more bits up to a maximum of 152 bits that is the lead portion of one or more ATM addresses.

Address Resolution - The procedure by which a client associates a LAN destination with the ATM address of another client or the BUS.

Address Resolution Protocol (ARP) - a method used to resolve higher level protocol addressing (such as IP) into the appropriate header data required for ATM; i.e., port, VPI, and VCI; also defines the AAL type to be used.

Agent - a component of network- and desktop-management software, such as SNMP, that gathers information from MIBs.

alarm - an unsolicited message from a device, typically indicating a problem with the system that requires attention.

Alarm Indication Signal (AIS) - In T1, an all ones condition used to alert a receiver that its incoming signal (or frame) has been lost. The loss of signal or frame is detected at the receiving end, and the failed signal is replaced by all the ones condition which the receiver interprets as an AIS. The normal response to this is AIS is for the receiving end to generate a yellow alarm signal as part of its transmission towards the faulty end. (The AIS itself is sometimes called a Blue Signal).

A-Law - The PCM coding and companding standard used in Europe.

Allowable Cell Rate (ACR) - parameter defined by the ATM Forum for ATM traffic management. ACR varies between the MCR and the PCR, and is dynamically controlled using congestion control mechanisms.

Alternate Mark Inversion (AMI) - A line coding format used on T1 facilities that transmits ones by alternate positive and negative pulses.

Alternate Routing - A mechanism that supports the use of a new path after an attempt to set up a connection along a previously selected path fails.

American National Standards Institute (ANSI) - a private organization that coordinates the setting and approval of some U.S. standards. It also represents the United States to the International Standards Organization.

American Standard Code for Information Interchange (ASCII) - a standard character set that (typically) assigns a 7-bit sequence to each letter, number, and selected control characters.

AppleTalk - a networking protocol developed by Apple Computer for communication between Apple's products and other computers. Independent of the network layer, AppleTalk runs on LocalTalk, EtherTalk and TokenTalk.

Application Layer - Layer seven of the ISO reference model; provides the end-user interface.

Application Program (APP) - a complete, self-contained program that performs a specific function directly for the user.

Application Program Interface (API) - a language format that defines how a program can be made to interact with another program, service, or other software; it allows users to develop custom interfaces with FORE products.

Assigned Cell - a cell that provides a service to an upper layer entity or ATM Layer Management entity (ATMM-entity).

asxmon - a FORE program that repeatedly displays the state of the switch and its active ports.

Asynchronous Time Division Multiplexing (ATDM) - a multiplexing technique in which a transmission capability is organized into a priori, unassigned time slots. The time slots are assigned to cells upon request of each application's instantaneous real need.

Asynchronous Transfer Mode (ATM) - a transfer mode in which the information is organized into cells. It is asynchronous in the sense that the recurrence of cells containing information from an individual user is not necessarily periodic.

ATM Adaptation Layer (AAL) - the AAL divides user information into segments suitable for packaging into a series of ATM cells. AAL layer types are used as follows:

AAL-1 - constant bit rate, time-dependent traffic such as voice and video
AAL-2 - still undefined; a placeholder for variable bit rate video transmission
AAL-3/4 - variable bit rate, delay-tolerant data traffic requiring some sequencing and/or error detection support (originally two AAL types, connection-oriented and connectionless, which have been combined)
AAL-5 - variable bit rate, delay-tolerant, connection-oriented data traffic requiring minimal sequencing or error detection support

ATM Address - Defined in the UNI Specification as 3 formats, each having 20 bytes in length.

ATM Forum - an international non-profit organization formed with the objective of accelerating the use of ATM products and services through a rapid convergence of interoperability specifications. In addition, the Forum promotes industry cooperation and awareness.

ATM Inverse Multiplexing (AIMUX) - A device that allows multiple T1 or E1 communications facilities to be combined into a single broadband facility for the transmission of ATM cells.

ATM Layer link - a section of an ATM Layer connection between two adjacent active ATM Layer entities (ATM-entities).

ATM Link - a virtual path link (VPL) or a virtual channel link (VCL).

ATM Management Interface (AMI) - the user interface to FORE Systems' *ForeThought* switch control software (SCS). AMI lets users monitor and change various operating configurations of FORE Systems switches and network module hardware and software, IP connectivity, and SNMP network management.

ATM Peer-to-Peer Connection - a virtual channel connection (VCC) or a virtual path connection (VPC) directly established, such as workstation-to-workstation. This setup is not commonly used in networks.

ATM Traffic Descriptor - a generic list of parameters that can be used to capture the intrinsic traffic characteristics of a requested ATM connection.

ATM User-to-User Connection - an association established by the ATM Layer to support communication between two or more ATM service users (i.e., between two or more next higher layer entities or between two or more ATM entities). The communication over an ATM Layer connection may be either bidirectional or unidirectional. The same Virtual Channel Identifier (VCI) is used for both directions of a connection at an interface.

atmarp - a FORE program that shows and manipulates ATM ARP entries maintained by the given device driver. This is also used to establish PVC connections.

ATM-attached Host Functional Group (AHFG) - The group of functions performed by an ATM-attached host that is participating in the MPOA service.

atmconfig - a FORE program used to enable or disable SPANS signaling.

atmstat - a FORE program that shows statistics gathered about a given adapter card by the device driver. These statistics include ATM layer and ATM adaptation layer cell and error counts. This can also be used to query other hosts via SNMP.

Attachment User Interface (AUI) - IEEE 802.3 interface between a media attachment unit (MAU) and a network interface card (NIC). The term AUI can also refer to the rear panel port to which an AUI cable might attach.

Auto-logout - a feature that automatically logs out a user if there has been no user interface activity for a specified length of time.

Automatic Protection Switching (APS) - Equipment installed in communications systems to detect circuit failures and automatically switch to redundant, standby equipment.

Available Bit Rate (ABR) - a type of traffic for which the ATM network attempts to meet that traffic's bandwidth requirements. It does not guarantee a specific amount of bandwidth and the end station must retransmit any information that did not reach the far end.

Backbone - the main connectivity device of a distributed system. All systems that have connectivity to the backbone connect to each other, but systems can set up private arrangements with each other to bypass the backbone to improve cost, performance, or security.

Backplane - High-speed communications line to which individual components are connected.

Backward Explicit Congestion Notification (BECN) - A Resource Management cell type generated by the network or the destination, indicating congestion or approaching congestion for traffic flowing in the direction opposite that of the BECN cell.

Bandwidth - usually identifies the capacity or amount of data that can be sent through a given circuit; may be user-specified in a PVC.

Baud - unit of signalling speed, equal to the number of discrete conditions or signal events per second. If each signal event represents only one bit, the baud rate is the same as bps; if each signal event represents more than one bit (such as a dibit), the baud rate is smaller than bps.

Bayonet-Neill-Concelman (BNC) - a bayonet-locking connector used to terminate coaxial cables. BNC is also referred to as Bayonet Network Connector.

Bipolar 8 Zero Substitution (B8ZS) - a technique used to satisfy the ones density requirements of digital T-carrier facilities in the public network while allowing 64 Kbps clear channel data. Strings of eight consecutive zeroes are replaced by an eight-bit code representing two intentional bipolar pulse code violations (000V10V1).

Bipolar Violation (BPV) - an error event on a line in which the normal pattern of alternating high (one) and low (zero) signals is disrupted. A bipolar violation is noted when two high signals occur without an intervening low signal, or vice versa.

B-ISDN Inter-Carrier Interface (B-ICI) - An ATM Forum defined specification for the interface between public ATM networks to support user services across multiple public carriers.

Bit Error Rate (BER) - A measure of transmission quality, generally shown as a negative exponent, (e.g., 10^{-7} which means 1 out of 10^{7} bits [1 out of 10,000,000 bits] are in error).

Bit Interleaved Parity (BIP) - an error-detection technique in which character bit patterns are forced into parity, so that the total number of one bits is always odd or always even. This is accomplished by the addition of a one or zero bit to each byte, as the byte is transmitted; at the other end of the transmission, the receiving device verifies the parity (odd or even) and the accuracy of the transmission.

Bit Robbing - The use of the least significant bit per channel in every sixth frame for signaling.

Bit Stuffing - A process in bit-oriented protocols where a zero is inserted into a string of ones by the sender to prevent the receiver from interpreting valid user data (the string of ones) as control characters (a Flag character for instance).

Border Gateway Protocol (BGP) - used by gateways in an internet connecting autonomous networks. It is derived from experiences learned using the EGP.

bps - bits per second

Bridge - a device that expands a Local Area Network by forwarding frames between data link layers associated with two separate cables, usually carrying a common protocol. Bridges can usually be made to filter certain packets (to forward only certain traffic).

Bridge Protocol Data Unit (BPDU) - A message type used by bridges to exchange management and control information.

Broadband - a service or system requiring transmission channels capable of supporting rates greater than the Integrated Services Digital Network (ISDN) primary rate.

Broadband Access - an ISDN access capable of supporting one or more broadband services.

Broadband Connection Oriented Bearer (BCOB) - Information in the SETUP message that indicates the type of service requested by the calling user.

BCOB-A (Bearer Class A) - Indicated by ATM end user in SETUP message for connection-oriented, constant bit rate service. The network may perform internetworking based on AAL information element (IE).

BCOB-C (Bearer Class C) - Indicated by ATM end user in SETUP message for connection-oriented, variable bit rate service. The network may perform internetworking based on AAL information element (IE).

BCOB-X (Bearer Class X) - Indicated by ATM end user in SETUP message for ATM transport service where AAL, traffic type and timing requirements are transparent to the network.

Broadband Integrated Services Digital Network (B-ISDN) - a common digital network suitable for voice, video, and high-speed data services running at rates beginning at 155 Mbps.

Broadband ISDN User's Part (B-ISUP) - A protocol used to establish, maintain and release broadband switched network connections across an SS7 / ATM network.

Broadband Terminal Equipment (B-TE) - An equipment category for B-ISDN which includes terminal adapters and terminals.

Broadcast - Data transmission to all addresses or functions.

Broadcast and Unknown Server (BUS) - in an emulated LAN, the BUS is responsible for accepting broadcast, multicast, and unknown unicast packets from the LECs to the broadcast MAC address (FFFFFFFFFFFF) via dedicated point-to-point connections, and forwarding the packets to all of the members of the ELAN using a single point-to-multipoint connection.

Brouter (bridging/router) - a device that routes some protocols and bridges others based on configuration information.

Buffer - A data storage medium used to compensate of a difference in rate of data flow or time of occurrence of events when transmitting data from one device to another.

Building Integrated Timing Supply (BITS) - a master timing supply for an entire building, which is a master clock and its ancillary equipment. The BITS supplies DS1 and / or composite clock timing references for synchronization to all other clocks and timing sources in that building.

Bursty Errored Seconds (BES) - a BES contains more than 1 and fewer than 320 path coding violation error events, and no severely errored frame or AIS defects. Controlled slips are not included in determining BESs.

Bursty Second - a second during which there were at least the set number of BES threshold event errors but fewer than the set number of SES threshold event errors.

Byte - A computer-readable group of bits (normally 8 bits in length).

Call - an association between two or more users or between a user and a network entity that is established by the use of network capabilities. This association may have zero or more connections.

Carrier - a company, such as any of the "baby Bell" companies, that provide network communications services, either within a local area or between local areas.

Carrier Group Alarm (CGA) - A service alarm generated by a channel bank when an out-of-frame (OOF) condition exists for some predetermined length of time (generally 300 milliseconds to 2.5 seconds). The alarm causes the calls using a trunk to be dropped and trunk conditioning to be applied.

Carrier Identification Parameter (CIP) - A 3 or 4 digit code in the initial address message identifying the carrier to be used for the connection.

cchan - a FORE program that manages virtual channels on a *ForeRunner* switch running `asxd`.

Cell - an ATM Layer protocol data unit (PDU). The basic unit of information transported in ATM technology, each 53-byte cell contains a 5-byte header and a 48-byte payload.

Cell Delay Variation (CDV) - a quantification of cell clumping for a connection. The cell clumping CDV (yk) is defined as the difference between a cell's expected reference arrival time (ck) and its actual arrival time (ak). The expected reference arrival time (ck) of cell k of a specific connection is max. T is the reciprocal of the negotiated peak cell rate.

Cell Delineation - the protocol for recognizing the beginning and end of ATM cells within the raw serial bit stream.

Cell Header - ATM Layer protocol control information.

Cell Loss Priority (CLP) - the last bit of byte four in an ATM cell header; indicates the eligibility of the cell for discard by the network under congested conditions. If the bit is set to 1, the cell may be discarded by the network depending on traffic conditions.

Cell Loss Ratio - In a network, cell loss ratio is (1-x/y), where y is the number of cells that arrive in an interval at an ingress of the network; and x is the number of these y cells that leave at the egress of the network element.

Cell Loss Ratio (CLR) - CLR is a negotiated QoS parameter and acceptable values are network specific. The objective is to minimize CLR provided the end-system adapts the traffic to the changing ATM layer transfer characteristics. The Cell Loss Ratio is defined for a connection as: Lost Cells/Total Transmitted Cells. The CLR parameter is the value of CLR that the network agrees to offer as an objective over the lifetime of the connection. It is expressed as an order of magnitude, having a range of 10-1 to 10-15 and unspecified.

Cell Misinsertion Rate (CMR) - the ratio of cells received at an endpoint that were not originally transmitted by the source end in relation to the total number of cells properly transmitted.

Cell Rate Adaptation (CRA) - a function performed by a protocol module in which empty cells (known as unassigned cells) are added to the output stream. This is because there always must be a fixed number of cells in the output direction; when there are not enough cells to transmit, unassigned cells are added to the output data stream.

Cell Relay Service (CRS) - a carrier service which supports the receipt and transmission of ATM cells between end users in compliance with ATM standards and implementation specifications.

Cell Transfer Delay - the transit delay of an ATM cell successfully passed between two designated boundaries. See CTD.

Cell Transfer Delay (CTD) - This is defined as the elapsed time between a cell exit event at the measurement point 1 (e.g., at the source UNI) and the corresponding cell entry event at the measurement point 2 (e.g., the destination UNI) for a particular connection. The cell transfer delay between two measurement points is the sum of the total inter-ATM node transmission delay and the total ATM node processing delay.

Channel - A path or circuit along which information flows.

Channel Associated Signaling (CAS) - a form of circuit state signaling in which the circuit state is indicated by one or more bits of signaling status sent repetitively and associated with that specific circuit.

Channel Bank - A device that multiplexes many slow speed voice or data conversations onto high speed link and controls the flow.

Channel Service Unit (CSU) - An interface for digital leased lines which performs loopback testing and line conditioning.

Channelization - capability of transmitting independent signals together over a cable while still maintaining their separate identity for later separation.

Circuit - A communications link between points.

Circuit Emulation Service (CES) - The ATM Forum circuit emulation service interoperability specification specifies interoperability agreements for supporting Constant Bit Rate (CBR) traffic over ATM networks that comply with the other ATM Forum interoperability agreements. Specifically, this specification supports emulation of existing TDM circuits over ATM networks.

Classical IP (CLIP) - IP over ATM which conforms to RFC 1577.

Clear to Send (CTS) - and RS-232 modem interface control signal (sent from the modem to the DTE on pin 5) which indicates that the attached DTE may begin transmitting; issuance in response to the DTE's RTS.

Clocking - Regularly timed impulses.

Closed User Group - A subgroup of network users that can be its own entity; any member of the subgroup can only communicate with other members of that subgroup.

Coaxial Cable - Coax is a type of electrical communications medium used in the LAN environment. This cable consists of an outer conductor concentric to an inner conductor, separated from each other by insulating material, and covered by some protective outer material. This medium offers large bandwidth, supporting high data rates with high immunity to electrical interference and a low incidence of errors. Coax is subject to distance limitations and is relatively expensive and difficult to install.

Cold Start Trap - an SNMP trap which is sent after a power-cycle (see *trap*).

Collision - Overlapping transmissions that occur when two or more nodes on a LAN attempt to transmit at or about the same time.

Committed Information Rate (CIR) - CIR is the information transfer rate which a network offering Frame Relay Services (FRS) is committed to transfer under normal conditions. The rate is averaged over a minimum increment of time.

Common Channel Signaling (CCS) - A form signaling in which a group of circuits share a signaling channel. Refer to SS7.

Common Management Interface Protocol (CMIP) - An ITU-TSS standard for the message formats and procedures used to exchange management information in order to operate, administer maintain and provision a network.

Concatenation - The connection of transmission channels similar to a chain.

Concentrator - a communications device that offers the ability to concentrate many lower-speed channels into and out of one or more high-speed channels.

Configuration - The phase in which the LE Client discovers the LE Service.

Congestion Management - traffic management feature that helps ensure reasonable service for VBR connections in an ATM network, based on a priority, sustained cell rate (SCR), and peak cell rate (PCR). During times of congestion, bandwidth is reduced to the SCR, based on the priority of the connection.

Connection - the concatenation of ATM Layer links in order to provide an end-to-end information transfer capability to access points.

Connection Admission Control (CAC) - the procedure used to decide if a request for an ATM connection can be accepted based on the attributes of both the requested connection and the existing connections.

Connection Endpoint (CE) - a terminator at one end of a layer connection within a SAP.

Connection Endpoint Identifier (CEI) - an identifier of a CE that can be used to identify the connection at a SAP.

Connectionless Broadband Data Service (CBDS) - A connectionless service similar to Bellcore's SMDS defined by European Telecommunications Standards Institute (ETSI).

Connectionless Service - a type of service in which no pre-determined path or link has been established for transfer of information, supported by AAL 4.

Connectionless Service (CLS) - A service which allows the transfer of information among service subscribers without the need for end-to- end establishment procedures.

Connection-Oriented Service - a type of service in which information always traverses the same pre-established path or link between two points, supported by AAL 3.

Constant Bit Rate (CBR) - a type of traffic that requires a continuous, specific amount of bandwidth over the ATM network (e.g., digital information such as video and digitized voice).

Controlled Slip (CS) - a situation in which one frame's worth of data is either lost or replicated. A controlled slip typically occurs when the sending device and receiving device are not using the same clock.

Convergence Sublayer (CS) - a portion of the AAL. Data is passed first to the CS where it is divided into rational, fixed-length packets or PDUs (Protocol Data Units). For example, AAL 4 processes user data into blocks that are a maximum of 64 kbytes long.

Corresponding Entities - peer entities with a lower layer connection among them.

cpath - a FORE program used to manage virtual paths on a *ForeRunner* switch running asxd.

cport - a FORE program that monitors and changes the state of ports on a *ForeRunner* switch running asxd.

Cross Connection - a mapping between two channels or paths at a network device.

Customer Premise Equipment (CPE) - equipment that is on the customer side of the point of demarcation, as opposed to equipment that is on a carrier side. See also point of demarcation.

Cut Through - Establishment of a complete path for signaling and/or audio communications.

Cyclic Redundancy Check (CRC) - an error detection scheme in which a number is derived from the data that will be transmitted. By recalculating the CRC at the remote end and comparing it to the value originally transmitted, the receiving node can detect errors.

D3/D4 - Refers to compliance with AT&T TR (Technical Reference) 62411 definitions for coding, supervision, and alarm support. D3/D4 compatibility ensures support of digital PBXes, M24 services, Megacom services, and Mode 3 D3/D4 channel banks at DS-1 level.

D4 Channelization - refers to compliance with AT&T Technical Reference 62411 regarding DS1 frame layout (the sequential assignment of channels and time slot numbers within the DS1).

D4 Framed/Framing Format - in T1, a 193-bit frame format in which the 193rd bit is used for framing and signaling information (the frame/framing bit). To be considered in support of D4 Framing, a device must be able to synchronize and frame-up on the 193rd bit.

Data Communications Equipment (DCE) - a definition in the RS232C standard that describes the functions of the signals and the physical characteristics of an interface for a communication device such as a modem.

Data Country Code (DCC) - This specifies the country in which an address is registered. The codes are given in ISO 3166. The length of this field is two octets. The digits of the data country code are encoded in Binary Coded Decimal (BCD) syntax. The codes will be left justified and padded on the right with the hexadecimal value “F” to fill the two octets.

Data Link - Communications connection used to transmit data from a source to a destination.

Data Link Connection Identifier (DLCI) - connection identifier associated with frame relay packets that serves the same functions as, and translates directly to, the VPI/VCI on an ATM cell.

Data Link Layer - Layer 2 of the OSI model, responsible for encoding data and passing it to the physical medium. The IEEE divides this layer into the LLC (Logical Link Control) and MAC (Media Access Control) sublayers.

Data Set Ready (DSR) - an RS-232 modem interface control signal (sent from the modem to the DTE on pin 6) which indicates that the modem is connected to the telephone circuit. Usually a prerequisite to the DTE issuing RTS.

Data Terminal Equipment (DTE) - generally user devices, such as terminals and computers, that connect to data circuit-terminating equipment. They either generate or receive the data carried by the network.

Data Terminal Ready (DTR) - an RS232 modem interface control signal (sent from the DTE to the modem on pin 20) which indicates that the DTE is ready for data transmission and which requests that the modem be connected to the telephone circuit.

Datagram - a packet of information used in a connectionless network service that is routed to its destination using an address included in the datagram's header.

DECnet - Digital Equipment Corporation's proprietary LAN.

Defense Advanced Research Projects Agency (DARPA) - the US government agency that funded the ARPANET.

Demultiplexing - a function performed by a layer entity that identifies and separates SDUs from a single connection to more than one connection (see *multiplexing*).

Destination End Station (DES) - An ATM termination point which is the destination for ATM messages of a connection and is used as a reference point for ABR services. See SES.

Digital Access and Cross-Connect System (DACS) - Digital switching system for routing T1 lines, and DS-0 portions of lines, among multiple T1 ports.

Digital Cross-connect System (DCS) - an electronic patch panel used to route digital signals in a central office.

Digital Standard n (0, 1, 1C, 2, and 3) (DSn) - a method defining the rate and format of digital hierarchy, with asynchronous data rates defined as follows:

DS0	64kb / s	1 voice channel
DS1	1.544Mb / s	24 DS0s
DS1C	3.152 Mb / s	2 DS1s
DS2	6.312 Mb / s	4 DS1s
DS3	44.736 Mb / s	28 DS1s

Synchronous data rates (SONET) are defined as:

STS-1 / OC-1	51.84 Mb / s	28 DS1s or 1 DS3
STS-3 / OC-3	155.52 Mb / s	3 STS-1s byte interleaved

STS-3c / OC-3c	155.52 Mb / s	Concatenated, indivisible payload
STS-12 / OC-12	622.08 Mb / s	12 STS-1s, 4 STS-3cs, or any mixture
STS-12c / OC-12c	622.08 Mb / s	Concatenated, indivisible payload
STS-48 / OC-48	2488.32 Mb / s	48 STS-1s, 16 STS-3cs, or any mixture

DIP (Dual In-line Package) Switch - a device that has two parallel rows of contacts that let the user switch electrical current through a pair of those contacts to on or off. They are used to reconfigure components and peripherals.

Domain Name Server - a computer that converts names to their corresponding Internet numbers. It allows users to telnet or FTP to the name instead of the number.

Domain Naming System (DNS) - the distributed name and address mechanism used in the Internet.

Duplex - Two way communication.

DXI - a generic phrase used in the full names of several protocols, all commonly used to allow a pair of DCE and DTE devices to share the implementation of a particular WAN protocol. The protocols define the packet formats used to transport data between DCE and DTE devices.

DXI Frame Address (DFA) - a connection identifier associated with ATM DXI packets that serves the same functions as, and translates directly to, the VPI / VCI on an ATM cell.

Dynamic Allocation - A technique in which the resources assigned for program execution are determined by criteria applied at the moment of need.

E.164 - A public network addressing standard utilizing up to a maximum of 15 digits. ATM uses E.164 addressing for public network addressing.

E1 - Wide-area digital transmission scheme used predominantly in Europe that carries data at a rate of 2.048 Mbps. E1 lines can be leased for private use from common carriers.

E3 - Wide-area digital transmission scheme used predominantly in Europe that carries data at a rate of 34.368 Mbps. E3 lines can be leased for private use from common carriers.

Edge Device - A physical device which is capable of forwarding packets between legacy interworking interfaces (e.g., Ethernet, Token Ring, etc.) and ATM interfaces based on data-link and network layer information but which does not participate in the running of any network layer routing protocol. An Edge Device obtains forwarding descriptions using the route distribution protocol.

elarp - a FORE program that shows and manipulates MAC and ATM address mappings for LAN Emulation Clients (LECs).

elconfig - a FORE program that shows and modifies LEC configuration. Lets the user set the NSAP address of the LAN Emulation Configuration Server, display the list of Emulated LANs configured in the LECS for this host, display the list of ELANs locally configured along with the membership state of each, and locally administer ELAN membership.

Electrically Erasable Programmable Read Only Memory (EEPROM) - an EPROM that can be cleared with electrical signals rather than the traditional ultraviolet light.

Electromagnetic Interference (EMI) - signals generated and radiated by an electronic device that cause interference with radio communications, among other effects.

Electronics Industries Association (EIA) - a USA trade organization that issues its own standards and contributes to ANSI; developed RS-232. Membership includes USA manufacturers.

Embedded SNMP Agent - an SNMP agent can come in two forms: embedded or proxy. An embedded SNMP agent is integrated into the physical hardware and software of the unit.

Emulated Local Area Network (ELAN) - A logical network initiated by using the mechanisms defined by LAN Emulation. This could include ATM and legacy attached end stations.

End System (ES) - a system where an ATM connection is terminated or initiated (an originating end system initiates the connection; a terminating end system terminates the connection).

End System Identifier (ESI) - This identifier distinguishes multiple nodes at the same level in case the lower level peer group is partitioned.

End-to-End Connection - when used in reference to an ATM network, a connection that travels through an ATM network, passing through various ATM devices and with endpoints at the termination of the ATM network.

Enterprise - Terminology generally referring to customers with multiple, non-contiguous geographic locations.

Equalization (EQL) - the process of compensating for line distortions.

Erasable Programmable Read Only Memory (EPROM) - A PROM which may be erased and rewritten to perform new or different functions (normally done with a PROM burner).

Errored Second (ES) - a second during which at least one code violation occurred.

Ethernet - a 10-Mbps, coaxial standard for LANs in which all nodes connect to the cable where they contend for access.

Excessive Zeroes (EXZ) Error Event - An Excessive Zeroes error event for an AMI-coded signal is the occurrence of more than fifteen contiguous zeroes. For a B8ZS coded signal, the defect occurs when more than seven contiguous zeroes are detected.

Explicit Forward Congestion Indication (EFCI) - the second bit of the payload type field in the header of an ATM cell, the EFCI bit indicates network congestion to receiving hosts. On a congested switch, the EFCI bit is set to “1” by the transmitting network module when a certain number of cells have accumulated in the network module's shared memory buffer. When a cell is received that has its EFCI bit set to “1,” the receiving host notifies the sending host, which should then reduce its transmission rate.

Explicit Rate (ER) - The Explicit Rate is an RM-cell field used to limit the source ACR to a specific value. It is initially set by the source to a requested rate (such as PCR). It may be subsequently reduced by any network element in the path to a value that the element can sustain. ER is formatted as a rate.

Extended Industry Standard Architecture (EISA) - bus architecture for desktop computers that provides a 32-bit data passage and maintains compatibility with the ISA or AT architecture.

Extended Super Frame (ESF) - a T1 framing format that utilizes the 193rd bit as a framing bit, but whose Superframe is made up of 24 frames instead of 12 as in D4 format. ESF also provides CRC error detection and maintenance data link functions.

Exterior Gateway Protocol (EGP) - used by gateways in an internet, connecting autonomous networks.

Fairness - related to Generic Flow Control, fairness is defined as meeting all of the agreed quality of service requirements by controlling the order of service for all active connections.

Far End Block Error (FEBE) - an error detected by extracting the 4-bit FEBE field from the path status byte (G1). The legal range for the 4-bit field is between 0000 and 1000, representing zero to eight errors. Any other value is interpreted as zero errors.

Far End Receive Failure (FERF) - a line error asserted when a 110 binary pattern is detected in bits 6, 7, 8 of the K2 byte for five consecutive frames. A line FERF is removed when any pattern other than 110 is detected in these bits for five consecutive frames.

Far-End - in a relationship between two devices in a circuit, the far-end device is the one that is remote.

Face Contact (FC) - Designation for fiber optic connector designed by Nippon Telegraph and Telephone which features a movable anti-rotation key allowing good repeatable performance despite numerous mating. Normally referred to as Fiber Connector, FC actually stands for Face Contact and sometimes linked with PC (Point Contact), designated as FC or FC-PC.

FCC Part 68 - The FCC rules regulating the direct connection of non-telephone company provided equipment to the public telephone network.

Federal Communications Commission (FCC) - a board of commissioners appointed by the President under the Communications Act of 1934, with the authority to regulate all interstate telecommunications originating in the United States, including transmission over phone lines.

Fiber Distributed Data Interface (FDDI) - high-speed data network that uses fiber-optic as the physical medium. Operates in similar manner to Ethernet or Token Ring, only faster.

File Transfer Protocol (FTP) - a TCP/IP protocol that lets a user on one computer access, and transfer data to and from, another computer over a network. ftp is usually the name of the program the user invokes to accomplish this task.

First-In, First-Out (FIFO) - method of coordinating the sequential flow of data through a buffer.

Flag - a bit pattern of six binary “1”s bounded by a binary “0” at each end (forms a 0111 1110 or Hex “7E”). It is used to mark the beginning and / or end of a frame.

Flow Control - The way in which information is controlled in a network to prevent loss of data when the receiving buffer is near its capacity.

***ForeThought* PNNI (FT-PNNI) -** a FORE Systems routing and signalling protocol that uses private ATM (NSAP) addresses; a precursor to ATM Forum PNNI (see PNNI).

Forward Error Correction (FEC) - A technique used by a receiver for correcting errors incurred in transmission over a communications channel without requiring retransmission of any information by the transmitter; typically involves a convolution of the transmitted bits and the appending of extra bits by both the receiver and transmitter using a common algorithm.

Forward Explicit Congestion Notification (FECN) - Bit set by a Frame Relay network to inform data terminal equipment (DTE) receiving the frame that congestion was experienced in the path from source to destination. DTE receiving frames with the FECN bit set can request that higher-level protocols take flow control action as appropriate.

Fractional T1 - the use of bandwidth in 64Kbps increments up to 1.544Mbps from a T1 facility.

Frame - a variable length group of data bits with a specific format containing flags at the beginning and end to provide demarcation.

Frame Check Sequence (FCS) - In bit-oriented protocols, a 16-bit field that contains transmission error checking information, usually appended to the end of the frame.

Frame Relay - a fast packet switching protocol based on the LAPD protocol of ISDN that performs routing and transfer with less overhead processing than X.25.

Frame Synchronization Error - an error in which one or more time slot framing bits are in error.

Frame-Based UNI (FUNI) - An ATM switch-based interface which accepts frame-based ATM traffic and converts it into cells.

Frame-Relay Service (FRS) - A connection oriented service that is capable of carrying up to 4096 bytes per frame.

Framing - a protocol that separates incoming bits into identifiable groups so that the receiving multiplexer recognizes the grouping.

Frequency Division Multiplexing (FDM) - a method of dividing an available frequency range into parts with each having enough bandwidth to carry one channel.

Gbps - gigabits per second (billion)

Generic Cell Rate Algorithm (GCRA) - an algorithm which is employed in traffic policing and is part of the user / network service contract. The GCRA is a scheduling algorithm which ensures that cells are marked as conforming when they arrive when expected or later than expected and non-conforming when they arrive sooner than expected.

Generic Connection Admission Control (GCAC) - This is a process to determine if a link has potentially enough resources to support a connection.

Generic Flow Control (GFC) - the first four bits of the first byte in an ATM cell header. Used to control the flow of traffic across the User-to-Network Interface (UNI), and thus into the network. Exact mechanisms for flow control are still under investigation and no explicit definition for this field exists at this time. (This field is used only at the UNI; for NNI-NNI use (between network nodes), these four bits provide additional network address capacity, and are appended to the VPI field.)

GIO - a proprietary bus architecture used in certain Silicon Graphics, Inc. workstations.

Header - protocol control information located at the beginning of a protocol data unit.

Header Error Control (HEC) - a CRC code located in the last byte of an ATM cell header that is used for checking cell header integrity only.

High Density Bipolar (HDB3) - A bipolar coding method that does not allow more than 3 consecutive zeroes.

High Level Data Link Control (HDLC) - An ITU-TSS link layer protocol standard for point-to-point and multi-point communications.

High Performance Parallel Interface (HIPPI) - ANSI standard that extends the computer bus over fairly short distances at speeds of 800 and 1600 Mbps.

High-Speed Serial Interface (HSSI) - a serial communications connection that operates at speeds of up to 1.544 Mbps.

Host - In a network, the primary or controlling computer in a multiple computer installation.

HPUX - the Hewlett-Packard version of UNIX.

Hub - a device that connects several other devices, usually in a star topology.

I/O Module - FORE's interface cards for the LAX-20 LAN Access Switch, designed to connect Ethernet, Token Ring, and FDDI LANs to *ForeRunner* ATM networks.

Institute of Electrical and Electronics Engineers (IEEE) - the world's largest technical professional society. Based in the U.S., the IEEE sponsors technical conferences, symposia & local meetings worldwide, publishes nearly 25% of the world's technical papers in electrical, electronics & computer engineering, provides educational programs for members, and promotes standardization.

IEEE 802 - Standards for the interconnection of LAN computer equipment. Deals with the Data Link Layers of the ISO Reference Model for OSI.
IEEE 802.1 - Defines the high-level network interfaces such as architecture, internetworking and network management.
IEEE 802.2 - Defines the Logical Link Control interface between the Data Link and Network Layers.
IEEE 802.3 - Defines CSMA / CD (Ethernet).

IEEE 802.4 - Defines the token-passing bus.
IEEE 802.5 - Defines the Token Ring access methodology. This standard incorporates IBM's Token Ring specifications.
IEEE 802.6 - Defines Metropolitan Area Networks.
IEEE 802.7 - The broadband technical advisory group.
IEEE 802.8 - The fiber optics technical advisory group.
IEEE 802.9 - Defines integrated data and voice networks.

Integrated Services Digital Network (ISDN) - an emerging technology that is beginning to be offered by the telephone carriers of the world. ISDN combines voice and digital network services into a single medium or wire.

Interexchange Carriers (IXC) - Long-distance communications companies that provide service between Local Access Transport Areas (LATAs).

Interface Data - the unit of information transferred to/from the upper layer in a single interaction across a SAP. Each Interface Data Unit (IDU) controls interface information and may also contain the whole or part of the SDU.

Interface Data Unit (IDU) - The unit of information transferred to/from the upper layer in a single interaction across the SAP. Each IDU contains interface control information and may also contain the whole or part of the SDU.

Interim Local Management Interface (ILMI) - the standard that specifies the use of the Simple Network Management Protocol (SNMP) and an ATM management information base (MIB) to provide network status and configuration information.

Intermediate System (IS) - a system that provides forwarding functions or relaying functions or both for a specific ATM connection. OAM cells may be generated and received.

International Standards Organization (ISO) - a voluntary, non treaty organization founded in 1946 that is responsible for creating international standards in many areas, including computers and communications.

International Telephone and Telegraph Consultative Committee (CCITT) - the international standards body for telecommunications.

Internet - (note the capital "I") the largest internet in the world including large national backbone nets and many regional and local networks worldwide. The Internet uses the TCP/IP suite. Networks with only e-mail connectivity are not considered on the Internet.

internet - while an internet is a network, the term "internet" is usually used to refer to a collection of networks interconnected with routers.

Internet Addresses - the numbers used to identify hosts on an internet network. Internet host numbers are divided into two parts; the first is the network number and the second, or local, part is a host number on that particular network. There are also three classes of networks in the Internet, based on the number of hosts on a given network. Large networks are classified as Class A, having addresses in the range 1-126 and having a maximum of 16,387,064 hosts. Medium networks are classified as Class B, with addresses in the range 128-191 and with a maximum of 64,516 hosts. Small networks are classified as Class C, having addresses in the range 192-254 with a maximum of 254 hosts. Addresses are given as dotted decimal numbers in the following format:

nnn.nnn.nnn.nnn

In a Class A network, the first of the numbers is the network number, the last three numbers are the local host address.

In a Class B network, the first two numbers are the network, the last two are the local host address.

In a Class C network, the first three numbers are the network address, the last number is the local host address.

The following table summarizes the classes and sizes:

Class	First #	Max# Hosts
A	1-126	16,387,064
B	129-191	64,516
C	192-223	254

Network mask values are used to identify the network portion and the host portion of the address. Default network masks are as follows:

Class A - 255.0.0.0

Class B - 255.255.0.0

Class C - 255.255.255.0

Subnet masking is used when a portion of the host ID is used to identify a subnetwork. For example, if a portion of a Class B network address is used for a subnetwork, the mask could be set as 255.255.255.0. This would allow the third byte to be used as a subnetwork address. All hosts on the network would still use the IP address to get on the Internet.

Internet Control Message Protocol (ICMP) - the protocol that handles errors and control messages at the IP layer. ICMP is actually a part of the IP protocol layer. It can generate error messages, test packets, and informational messages related to IP.

Internet Engineering Task Force (IETF) - a large, open, international community of network designers, operators, vendors and researchers whose purpose is to coordinate the operation, management and evolution of the Internet to resolve short- and mid-range protocol and architectural issues.

Internet Protocol (IP) - a connectionless, best-effort packet switching protocol that offers a common layer over dissimilar networks.

Internetwork Packet Exchange (IPX) Protocol - a NetWare protocol similar to the Xerox Network Systems (XNS) protocol that provides datagram delivery of messages.

Interoperability - The ability of software and hardware on multiple machines, from multiple vendors, to communicate.

Interworking Function (IWF) - provides a means for two different technologies to interoperate.

IP Address - a unique 32-bit integer used to identify a device in an IP network. You will most commonly see IP addresses written in "dot" notation (e.g., 192.228.32.14).

IP Netmask - a 32-bit pattern that is combined with an IP address to determine which bits of an IP address denote the network number and which denote the host number. Netmasks are useful for sub-dividing IP networks. IP netmasks are written in "dot" notation (e.g., 255.255.0.0).

ISA Bus - a bus standard developed by IBM for expansion cards in the first IBM PC. The original bus supported a data path only 8 bits wide. IBM subsequently developed a 16-bit version for its AT class computers. The 16-bit AT ISA bus supports both 8- and 16-bit cards. The 8-bit bus is commonly called the PC/XT bus, and the 16-bit bus is called the AT bus.

Isochronous - signals carrying embedded timing information or signals that are dependent on uniform timing; usually associated with voice and/or video transmission.

International Telecommunications Union Telecommunications (ITU-T) - an international body of member countries whose task is to define recommendations and standards relating to the international telecommunications industry. The fundamental standards for ATM have been defined and published by the ITU-T (Previously CCITT).

J2 - Wide-area digital transmission scheme used predominantly in Japan that carries data at a rate of 6.312 Mbps.

Jitter - analog communication line distortion caused by variations of a signal from its reference timing position.

Joint Photographic Experts Group (JPEG) - An ISO Standards group that defines how to compress still pictures.

Jumper - a patch cable or wire used to establish a circuit, often temporarily, for testing or diagnostics; also, the devices, shorting blocks, used to connect adjacent exposed pins on a printed circuit board that control the functionality of the card.

Kbps - kilobits per second (thousand)

LAN Access Concentrator - a LAN access device that allows a shared transmission medium to accommodate more data sources than there are channels currently available within the transmission medium.

LAN Emulation Address Resolution Protocol (LE_ARP) - A message issued by a LE client to solicit the ATM address of another function.

LAN Emulation Client (LEC) - the component in an end system that performs data forwarding, address resolution, and other control functions when communicating with other components within an ELAN.

LAN Emulation Configuration Server (LECS) - the LECS is responsible for the initial configuration of LECs. It provides information about available ELANs that a LEC may join, together with the addresses of the LES and BUS associated with each ELAN.

LAN Emulation Server (LES) - the LES implements the control coordination function for an ELAN by registering and resolving MAC addresses to ATM addresses.

LAN Emulation (LANE) - technology that allows an ATM network to function as a LAN backbone. The ATM network must provide multicast and broadcast support, address mapping (MAC-to-ATM), SVC management, and a usable packet format. LANE also defines Ethernet and Token Ring ELANs.

lane - a program that provides control over the execution of the LAN Emulation Server (LES), Broadcast/Unknown Server (BUS), and LAN Emulation Configuration Server (LECS) on the local host.

Latency - The time interval between a network station seeking access to a transmission channel and that access being granted or received.

Layer Entity - an active layer within an element.

Layer Function - a part of the activity of the layer entities.

Layer Service - a capability of a layer and the layers beneath it that is provided to the upper layer entities at the boundary between that layer and the next higher layer.

Layer User Data - the information transferred between corresponding entities on behalf of the upper layer or layer management entities for which they are providing services.

le - a FORE program that implements both the LAN Emulation Server (LES) and the Broadcast/Unknown Server (BUS).

Leaky Bucket - informal cell policing term for the Generic Cell Rate Algorithm which in effect receives cells into a bucket and leaks them out at the specified or contracted rate (i.e., PCR).

Least Significant Bit (LSB) - lowest order bit in the binary representation of a numerical value.

lecs - a FORE program that implements the assignment of individual LECs to different emulated LANs.

leq - a FORE program that provides information about an ELAN. This information is obtained from the LES, and includes MAC addresses registered on the ELAN together with their corresponding ATM addresses.

Line Build Out (LBO) - Because T1 circuits require the last span to lose 15-22.5 dB, a selectable output attenuation is generally required of DTE equipment (typical selections include 0.0, 7.5 and 15 dB of loss at 772 KHz).

Line Code Violations (LCV) - Error Event. A Line Coding Violation (LCV) is the occurrence of either a Bipolar Violation (BPV) or Excessive Zeroes (EXZ) Error Event.

Link - An entity that defines a topological relationship (including available transport capacity) between two nodes in different subnetworks. Multiple links may exist between a pair of subnetworks. Synonymous with logical link.

Link Access Procedure, Balanced (LAPB) - Data link protocol in the X.25 protocol stack. LAPB is a bit-oriented protocol derived from HDLC. See also HDLC and X.25.

Link Down Trap - an SNMP trap, sent when an interface changes from a normal state to an error state, or is disconnected.

Link Layer - layer in the OSI model regarding transmission of data between network nodes.

Link Up Trap - an SNMP trap, sent when an interface changes from an error condition to a normal state.

Load Sharing - Two or more computers in a system that share the load during peak hours. During periods of non peak hours, one computer can manage the entire load with the other acting as a backup.

Local Access and Transport Area (LATA) - Geographic boundaries of the local telephone network, specified by the FCC, in which a single LEC may perform its operations. Communications outside or between LATAs are provided by IXCs.

Local Area Network (LAN) - a data network intended to serve an area of only a few square kilometers or less. Because the network is known to cover only a small area, optimizations can be made in the network signal protocols that permit higher data rates.

Logical Link Control (LLC) - protocol developed by the IEEE 802 committee for data-link-layer transmission control; the upper sublayer of the IEEE Layer 2 (OSI) protocol that complements the MAC protocol; IEEE standard 802.2; includes end-system addressing and error checking.

Loopback - a troubleshooting technique that returns a transmitted signal to its source so that the signal can be analyzed for errors. Typically, a loopback is set at various points in a line until the section of the line that is causing the problem is discovered.

looptest - program that tests an interface for basic cell reception and transmission functionality, usually used for diagnostic purposes to determine if an interface is functioning properly.

Loss Of Frame (LOF) - a type of transmission error that may occur in wide-area carrier lines.

Loss Of Pointer (LOP) - a type of transmission error that may occur in wide-area carrier lines.

Loss Of Signal (LOS) - a type of transmission error that may occur in wide-area carrier lines, or a condition declared when the DTE senses a loss of a DS1 signal from the CPE for more the 150 milliseconds (the DTE generally responds with an all ones “Blue or AIS” signal).

Management Information Base (MIB) - the set of parameters that an SNMP management station can query or set in the SNMP agent of a networked device (e.g., router).

Maximum Burst Size (MBS) - the Burst Tolerance (BT) is conveyed through the MBS which is coded as a number of cells. The BT together with the SCR and the GCRA determine the MBS that may be transmitted at the peak rate and still be in conformance with the GCRA.

Maximum Burst Tolerance - the largest burst of data that a network device is guaranteed to handle without discarding cells or packets. Bursts of data larger than the maximum burst size may be subject to discard.

Maximum Cell Delay Variance (MCDV) - This is the maximum two-point CDV objective across a link or node for the specified service category.

Maximum Cell Loss Ratio (MCLR) - This is the maximum ratio of the number of cells that do not make it across the link or node to the total number of cells arriving at the link or node.

Maximum Cell Transfer Delay (MCTD) - This is the sum of the fixed delay component across the link or node and MCDV.

Maximum Transmission Unit (MTU) - the largest unit of data that can be sent over a type of physical medium.

Mbps - megabits per second (million)

Media Access Control (MAC) - a media-specific access control protocol within IEEE 802 specifications; currently includes variations for Token Ring, token bus, and CSMA/CD; the lower sublayer of the IEEE’s link layer (OSI), which complements the Logical Link Control (LLC).

Media Attachment Unit (MAU) - device used in Ethernet and IEEE 802.3 networks that provides the interface between the AUI port of a station and the common medium of the Ethernet. The MAU, which can be built into a station or can be a separate device, performs physical layer functions including conversion of the digital data from the Ethernet interface, collision detection, and injection of bits onto the network.

Media Interface Connector (MIC) - fiber optic connector that joins fiber to the FDDI controller.

Message Identifier (MID) - message identifier used to associate ATM cells that carry segments from the same higher layer packet.

Metasignalling - an ATM Layer Management (LM) process that manages different types of signalling and possibly semipermanent virtual channels (VCs), including the assignment, removal, and checking of VCs.

Metasignalling VCs - the standardized VCs that convey metasignalling information across a User-to-Network Interface (UNI).

Metropolitan Area Network (MAN) - network designed to carry data over an area larger than a campus such as an entire city and its outlying area.

MicroChannel - a proprietary 16- or 32-bit bus developed by IBM for its PS/2 computers' internal expansion cards; also offered by others.

Minimum Cell Rate (MCR) - parameter defined by the ATM Forum for ATM traffic management, defined only for ABR transmissions and specifying the minimum value for the ACR.

Most Significant Bit (MSB) - highest order bit in the binary representation of a numerical value.

Motion Picture Experts Group (MPEG) - ISO group dealing with video and audio compression techniques and mechanisms for multiplexing and synchronizing various media streams.

MPOA Client - A device which implements the client side of one or more of the MPOA protocols, (i.e., is a SCP client and/or an RDP client. An MPOA Client is either an Edge Device Functional Group (EDFG) or a Host Behavior Functional Group (HBFG).

MPOA Server - An MPOA Server is any one of an ICFG or RSFG.

MPOA Service Area - The collection of server functions and their clients. A collection of physical devices consisting of an MPOA server plus the set of clients served by that server.

MPOA Target - A set of protocol address, path attributes, (e.g., internetwork layer QoS, other information derivable from received packet) describing the intended destination and its path attributes that MPOA devices may use as lookup keys.

Mu-Law - The PCM coding and companding standard used in Japan and North America.

Multicasting - The ability to broadcast messages to one node or a select group of nodes.

Multi-homed - a device having both an ATM and another network connection, like Ethernet.

Multimode Fiber Optic Cable (MMF) - fiber optic cable in which the signal or light propagates in multiple modes or paths. Since these paths may have varying lengths, a transmitted pulse of light may be received at different times and smeared to the point that pulses may interfere with surrounding pulses. This may cause the signal to be difficult or impossible to receive. This pulse dispersion sometimes limits the distance over which a MMF link can operate.

Multiplexing - a function within a layer that interleaves the information from multiple connections into one connection (see demultiplexing).

Multipoint Access - user access in which more than one terminal equipment (TE) is supported by a single network termination.

Multipoint-to-Multipoint Connection - a collection of associated ATM VC or VP links, and their associated endpoint nodes, with the following properties:

1. All N nodes in the connection, called Endpoints, serve as a Root Node in a Point-to-Multipoint connection to all of the (N-1) remaining endpoints.

2. Each of the endpoints can send information directly to any other endpoint, but the receiving endpoint cannot distinguish which of the endpoints is sending information without additional (e.g., higher layer) information.

Multipoint-to-Point Connection - a Point-to-Multipoint Connection may have zero bandwidth from the Root Node to the Leaf Nodes, and non-zero return bandwidth from the Leaf Nodes to the Root Node. Such a connection is also known as a Multipoint-to-Point Connection.

Multiprotocol over ATM (MPOA) - An effort taking place in the ATM Forum to standardize protocols for the purpose of running multiple network layer protocols over ATM.

Narrowband Channel - sub-voicegrade channel with a speed range of 100 to 200 bps.

National TV Standards Committee (NTSC) - Started in the US in 1953 from a specification laid down by the National Television Standards Committee. It takes the B-Y and R-Y color difference signals, attenuates them to I and Q, then modulates them using double-sideband suppressed subcarrier at 3.58MHz. The carrier reference is sent to the receiver as a burst during the back porch. An industry group that defines how television signals are encoded and transmitted in the US. (See also PAL, SECAM for non-U.S. countries).

Near-End - in a relationship between two devices in a circuit, the near-end device is the one that is local.

Network Layer - Layer three In the OSI model, the layer that is responsible for routing data across the network.

Network Management Entity (NM) - body of software in a switching system that provides the ability to manage the PNNI protocol. NM interacts with the PNNI protocol through the MIB.

Network Management Layer (NML) - an abstraction of the functions provided by systems which manage network elements on a collective basis, providing end-to-end network monitoring.

Network Management Station (NMS) - system responsible for managing a network or portion of a network by talking to network management agents, which reside in the managed nodes.

Network Module - See *Port Card*.

Network Parameter Control (NPC) - Defined as the set of actions taken by the network to monitor and control traffic from the NNI. Its main purpose is to protect network resources from malicious as well as unintentional misbehavior which can affect the QoS of other already established connections by detecting violations of negotiated parameters and taking appropriate actions. Refer to UPC.

Network Redundancy - Duplicated network equipment and/or data which can provide a backup in case of network failures.

Network Service Access Point (NSAP) - OSI generic standard for a network address consisting of 20 octets. ATM has specified E.164 for public network addressing and the NSAP address structure for private network addresses.

Network-to-Network Interface or Network Node Interface (NNI) - the interface between two public network pieces of equipment.

Node - A computer or other device when considered as part of a network.

Non Return to Zero (NRZ) - a binary encoding scheme in which ones and zeroes are represented by opposite and alternating high and low voltages and where there is no return to a zero (reference) voltage between encoded bits.

Non Return to Zero Inverted (NRZI) - A binary encoding scheme that inverts the signal on a “1” and leaves the signal unchanged for a “0”. (Also called transition encoding.)

Nonvolatile Storage - Memory storage that does not lose its contents when power is turned off.

NuBus - a high-speed bus used in Macintosh computers, structured so users can put a card into any slot on the board without creating conflict over the priority between those cards.

nx64K - This refers to a circuit bandwidth or speed provided by the aggregation of nx64 kbps channels (where n= integer > 1). The 64K or DS0 channel is the basic rate provided by the T Carrier systems.

Nyquist Theorem - In communications theory, a formula stating that two samples per cycle is sufficient to characterize a bandwidth limited analog signal; in other words, the sampling rate must be twice the highest frequency component of the signal (i.e., sample 4 KHz analog voice channels 8000 times per second).

Object Identifier (OID) - the address of a MIB variable.

Octet - a grouping of 8 bits; similar, but not identical to, a byte.

One’s Density - The requirement for digital transmission lines in the public switched telephone network that eight consecutive “0”s cannot be in a digital data stream; exists because repeaters and clocking devices within the network will lose timing after receiving eight “0”s in a row; a number of techniques are used to insert a “1” after every seventh-consecutive “0” (see Bit Stuffing).

Open Shortest Path First (OSPF) Protocol - a routing algorithm for IP that incorporates least-cost, equal-cost, and load balancing.

Open Systems Interconnection (OSI) - the 7-layer suite of protocols designed by ISO committees to be the international standard computer network architecture.

OpenView - Hewlett-Packard's network management software.

Operation and Maintenance (OAM) Cell - a cell that contains ATM LM information. It does not form part of the upper layer information transfer.

Optical Carrier level-n (OC-n) - The optical counterpart of STS-n (the basic rate of 51.84 Mbps on which SONET is based is referred to as OC-1 or STS-1).

Organizationally Unique Identifier (OUI) - Part of RFC 1483. A three-octet field in the SubNetwork Attachment Point (SNAP) header, identifying an organization which administers the meaning of the following two octet Protocol Identifier (PID) field in the SNAP header. Together they identify a distinct routed or bridged protocol.

Out-of-Band Management - refers to switch configuration via the serial port or over Ethernet, not ATM.

Out-of-Frame (OOF) - a signal condition and alarm in which some or all framing bits are lost.

Packet - An arbitrary collection of data grouped and transmitted with its user identification over a shared facility.

Packet Assembler Disassembler (PAD) - interface device that buffers data sent to/from character mode devices, and assembles and disassembles the packets needed for X.25 operation.

Packet Internet Groper (ping) - a program used to test reachability of destinations by sending them an ICMP echo request and waiting for a reply.

Packet Level Protocol (PLP) - Network layer protocol in the X.25 protocol stack. Sometimes called X.25 Level 3 or X.25 Protocol.

Packet Switched Network (PSN) - a network designed to carry data in the form of packets. The packet and its format is internal to that network.

Packet Switching - a communications paradigm in which packets (messages) are individually routed between hosts with no previously established communications path.

Payload Scrambling - a technique that eliminates certain bit patterns that may occur within an ATM cell payload that could be misinterpreted by certain sensitive transmission equipment as an alarm condition.

Payload Type (PT) - bits 2...4 in the fourth byte of an ATM cell header. The PT indicates the type of information carried by the cell. At this time, values 0...3 are used to identify various types of user data, values 4 and 5 indicate management information, and values 6 and 7 are reserved for future use.

Peak Cell Rate - at the PHY Layer SAP of a point-to-point VCC, the Peak Cell Rate is the inverse of the minimum inter-arrival time T0 of the request to send an ATM-SDU.

Peak Cell Rate (PCR) - parameter defined by the ATM Forum for ATM traffic management. In CBR transmissions, PCR determines how often data samples are sent. In ABR transmissions, PCR determines the maximum value of the ACR.

Peer Entities - entities within the same layer.

Peripheral Component Interconnect (PCI) - a local-bus standard created by Intel.

Permanent Virtual Channel Connection (PVCC) - A Virtual Channel Connection (VCC) is an ATM connection where switching is performed on the VPI/VCI fields of each cell. A Permanent VCC is one which is provisioned through some network management function and left up indefinitely.

Permanent Virtual Circuit (or Channel) (PVC) - a circuit or channel through an ATM network provisioned by a carrier between two endpoints; used for dedicated long-term information transport between locations.

Permanent Virtual Path Connection (PVPC) - A Virtual Path Connection (VPC) is an ATM connection where switching is performed on the VPI field only of each cell. A PVPC is one which is provisioned through some network management function and left up indefinitely.

Phase Alternate Line (PAL) - Largely a German/British development in the late 60s, used in the UK and much of Europe. The B-Y and R-Y signals are weighted to U and V, then modulated onto a double-sideband suppressed subcarrier at 4.43MHz. The V (R-Y) signal's phase is turned through 180 degrees on each alternate line. This gets rid of NTSC's hue changes with phase errors at the expense of de-saturation. The carrier reference is sent as a burst in the back porch. The phase of the burst is alternated every line to convey the phase switching of the V signal. The burst's average phase is -V. (see NTSC for U.S.).

Physical Layer (PHY) - the actual cards, wires, and/or fiber-optic cabling used to connect computers, routers, and switches.

Physical Layer Connection - an association established by the PHY between two or more ATM-entities. A PHY connection consists of the concatenation of PHY links in order to provide an end-to-end transfer capability to PHY SAPs.

Physical Layer Convergence Protocol (PLCP) - a framing protocol that runs on top of the T1 or E1 framing protocol.

Physical Medium (PM) - Refers to the actual physical interfaces. Several interfaces are defined including STS-1, STS-3c, STS-12c, STM-1, STM-4, DS1, E1, DS2, E3, DS3, E4, FDDI-based, Fiber Channel-based, and STP. These range in speeds from 1.544Mbps through 622.08 Mbps.

Physical Medium Dependent (PMD) - a sublayer concerned with the bit transfer between two network nodes. It deals with wave shapes, timing recovery, line coding, and electro-optic conversions for fiber based links.

Plesiochronous - two signals are plesiochronous if their corresponding significant instants occur at nominally the same rate, with variations in rate constrained to specified limits.

Point of Demarcation - the dividing line between a carrier and the customer premise that is governed by strict standards that define the characteristics of the equipment on each side of the demarcation. Equipment on one side of the point of demarcation is the responsibility of the customer. Equipment on the other side of the point of demarcation is the responsibility of the carrier.

Point-to-Multipoint Connection - a collection of associated ATM VC or VP links, with associated endpoint nodes, with the following properties:

1. One ATM link, called the Root Link, serves as the root in a simple tree topology. When the Root node sends information, all of the remaining nodes on the connection, called Leaf nodes, receive copies of the information.

2. Each of the Leaf Nodes on the connection can send information directly to the Root Node. The Root Node cannot distinguish which Leaf is sending information without additional (higher layer) information. (See the following note for Phase 1.)

3. The Leaf Nodes cannot communicate directly to each other with this connection type.

Note: Phase 1 signalling does not support traffic sent from a Leaf to the Root.

Point-to-Point Connection - a connection with only two endpoints.

Point-to-Point Protocol (PPP) - Provides a method for transmitting packets over serial point-to-point links.

Policing - the function that ensures that a network device does not accept traffic that exceeds the configured bandwidth of a connection.

Port Card - ATM port interface cards which may be individually added to or removed from the ASX-4000 ATM switch to provide a diverse choice of connection alternatives. Port cards can also be referred to as network modules.

Port Identifier - The identifier assigned by a logical node to represent the point of attachment of a link to that node.

Presentation Layer - Sixth layer of the OSI model, providing services to the application layer.

Primary Reference Source (PRS) - Equipment that provides a timing signal whose long-term accuracy is maintained at 1 x 10 -11 or better with verification to universal coordinated time (UTC) and whose timing signal is used as the basis of reference for the control of other clocks within a network.

Primitive - an abstract, implementation-independent interaction between a layer service user and a layer service provider.

Priority - the parameter of ATM connections that determines the order in which they are reduced from the peak cell rate to the sustained cell rate in times of congestion. Connections with lower priority (4 is low, 1 is high) are reduced first.

Private Branch Exchange (PBX) - a private phone system (switch) that connects to the public telephone network and offers in-house connectivity. To reach an outside line, the user must dial a digit like 8 or 9.

Private Network Node Interface or Private Network-to-Network Interface (PNNI) - a protocol that defines the interaction of private ATM switches or groups of private ATM switches

Programmable Read-Only Memory (PROM) - a chip-based information storage area that can be recorded by an operator but erased only through a physical process.

Protocol - a set of rules and formats (semantic and syntactic) that determines the communication behavior of layer entities in the performance of the layer functions.

Protocol Control Information - the information exchanged between corresponding entities using a lower layer connection to coordinate their joint operation.

Protocol Data Unit (PDU) - a unit of data specified in a layer protocol and consisting of protocol control information and layer user data.

Proxy - the process in which one system acts for another system to answer protocol requests.

Proxy Agent - an agent that queries on behalf of the manager, used to monitor objects that are not directly manageable.

Public Data Network (PDN) - a network designed primarily for data transmission and intended for sharing by many users from many organizations.

Pulse Code Modulation (PCM) - a modulation scheme that samples the information signals and transmits a series of coded pulses to represent the data.

Q.2931 - Derived from Q.93B, the narrowband ISDN signalling protocol, an ITU standard describing the signalling protocol to be used by switched virtual circuits on ATM LANs.

Quality of Service (QoS) - Quality of Service is defined on an end-to-end basis in terms of the following attributes of the end-to-end ATM connection:

Cell Loss Ratio
Cell Transfer Delay
Cell Delay Variation

Queuing Delay (QD) - refers to the delay imposed on a cell by its having to be buffered because of unavailability of resources to pass the cell onto the next network function or element. This buffering could be a result of oversubscription of a physical link, or due to a connection of higher priority or tighter service constraints getting the resource of the physical link.

Radio Frequency Interference (RFI) - the unintentional transmission of radio signals. Computer equipment and wiring can both generate and receive RFI.

Real-Time Clock - a clock that maintains the time of day, in contrast to a clock that is used to time the electrical pulses on a circuit.

Red Alarm - In T1, a red alarm is generated for a locally detected failure such as when a condition like OOF exists for 2.5 seconds, causing a CGA, (Carrier Group Alarm).

Reduced Instruction Set Computer (RISC) - a generic name for CPUs that use a simpler instruction set than more traditional designs.

Redundancy - In a data transmission, the fragments of characters and bits that can be eliminated with no loss of information.

Registration - The address registration function is the mechanism by which Clients provide address information to the LAN Emulation Server.

Relaying - a function of a layer by means of which a layer entity receives data from a corresponding entity and transmits it to another corresponding entity.

Request To Send (RTS) - an RS-232 modem interface signal (sent from the DTE to the modem on pin 4) which indicates that the DTE has data to transmit.

Requests For Comment (RFCs) - IETF documents suggesting protocols and policies of the Internet, inviting comments as to the quality and validity of those policies. These comments are collected and analyzed by the IETF in order to finalize Internet standards.

RFC1483 - Multiprotocol Encapsulation over ATM Adaptation Layer 5.
RFC1490 - Multiprotocol Interconnect over Frame Relay.
RFC1577 - Classical IP and ARP over ATM.
RFC1755 - ATM Signaling Support for IP over ATM.

Robbed-Bit Signaling - In T1, refers to the use of the least significant bit of every word of frames 6 and 12 (D4), or 6, 12, 18, and 24 (ESF) for signaling purposes.

Route Server - A physical device that runs one or more network layer routing protocols, and which uses a route query protocol in order to provide network layer routing forwarding descriptions to clients.

Router - a device that forwards traffic between networks or subnetworks based on network layer information.

Routing Domain (RD) - A group of topologically contiguous systems which are running one instance of routing.

Routing Information Protocol (RIP) - a distance vector-based protocol that provides a measure of distance, or hops, from a transmitting workstation to a receiving workstation.

Routing Protocol - A general term indicating a protocol run between routers and/or route servers in order to exchange information used to allow computation of routes. The result of the routing computation will be one or more forwarding descriptions.

SBus - hardware interface for add-in boards in later-version Sun 3 workstations.

Scalable Processor Architecture Reduced instruction set Computer (SPARC) - a powerful workstation similar to a reduced-instruction-set-computing (RISC) workstation.

Segment - a single ATM link or group of interconnected ATM links of an ATM connection.

Segmentation And Reassembly (SAR) - the SAR accepts PDUs from the CS and divides them into very small segments (44 bytes long). If the CS-PDU is less than 44 bytes, it is padded to 44 with zeroes. A two-byte header and trailer are added to this basic segment. The header identifies the message type (beginning, end, continuation, or single) and contains sequence numbering and message identification. The trailer gives the SAR-PDU payload length, exclusive of pad, and contains a CRC check to ensure the SAR-PDU integrity. The result is a 48-byte PDU that fits into the payload field of an ATM cell.

Selector (SEL) - A subfield carried in SETUP message part of ATM endpoint address Domain specific Part (DSP) defined by ISO 10589, not used for ATM network routing, used by ATM end systems only.

Semipermanent Connection - a connection established via a service order or via network management.

Serial Line IP (SLIP) - A protocol used to run IP over serial lines, such as telephone circuits or RS-232 cables, interconnecting two systems.

Service Access Point (SAP) - the point at which an entity of a layer provides services to its LM entity or to an entity of the next higher layer.

Service Data Unit (SDU) - a unit of interface information whose identity is preserved from one end of a layer connection to the other.

Service Specific Connection Oriented Protocol (SSCOP) - an adaptation layer protocol defined in ITU-T Specification: Q.2110.

Service Specific Convergence Sublayer (SSCS) - The portion of the convergence sublayer that is dependent upon the type of traffic that is being converted.

Session Layer - Layer 5 in the OSI model that is responsible for establishing and managing sessions between the application programs running in different nodes.

Severely Errored Seconds (SES) - a second during which more event errors have occurred than the SES threshold (normally 10-3).

Shaping Descriptor - *n* ordered pairs of GCRA parameters (I,L) used to define the negotiated traffic shape of an APP connection. The traffic shape refers to the load-balancing of a network, where load-balancing means configuring data flows to maximize network efficiency.

Shielded Pair - Two insulated wires in a cable wrapped with metallic braid or foil to prevent interference and provide noise free transmission.

Shielded Twisted Pair (STP) - two or more insulated wires, twisted together and then wrapped in a cable with metallic braid or foil to prevent interference and offer noise-free transmissions.

Signaling System No. 7 (SS7) - The SS7 protocol has been specified by ITU-T and is a protocol for interexchange signaling.

Simple and Efficient Adaptation Layer (SEAL) - also called AAL 5, this ATM adaptation layer assumes that higher layer processes will provide error recovery, thereby simplifying the SAR portion of the adaptation layer. Using this AAL type packs all 48 bytes of an ATM cell information field with data. It also assumes that only one message is crossing the UNI at a time. That is, multiple end-users at one location cannot interleave messages on the same VC, but must queue them for sequential transmission.

Simple Gateway Management Protocol (SGMP) - the predecessor to SNMP.

Simple Mail Transfer Protocol (SMTP) - the Internet electronic mail protocol used to transfer electronic mail between hosts.

Simple Network Management Protocol (SNMP) - the Internet standard protocol for managing nodes on an IP network.

Simple Protocol for ATM Network Signalling (SPANS) - FORE Systems' proprietary signalling protocol used for establishing SVCs between FORE Systems equipment.

Single Mode Fiber (SMF) - Fiber optic cable in which the signal or light propagates in a single mode or path. Since all light follows the same path or travels the same distance, a transmitted pulse is not dispersed and does not interfere with adjacent pulses. SMF fibers can support longer distances and are limited mainly by the amount of attenuation. Refer to MMF.

Small Computer Systems Interface (SCSI) - a standard for a controller bus that connects hardware devices to their controllers on a computer bus, typically used in small systems.

Smart PVC (SPVC) - a generic term for any communications medium which is permanently provisioned at the end points, but switched in the middle. In ATM, there are two kinds of SPVCs: smart permanent virtual path connections (SPVPCs) and smart permanent virtual channel connections (SPVCCs).

snmpd - an SMNP agent for a given adapter card.

Source - Part of communications system which transmits information.

Source Address (SA) - The address from which the message or data originated.

Source MAC Address (SA) - A six octet value uniquely identifying an end point and which is sent in an IEEE LAN frame header to indicate source of frame.

Source Traffic Descriptor - a set of traffic parameters belonging to the ATM Traffic Descriptor used during the connection set-up to capture the intrinsic traffic characteristics of the connection requested by the source.

Spanning Tree Protocol - provides loop-free topology in a network environment where there are redundant paths.

Static Route - a route that is entered manually into the routing table.

Statistical Multiplexing - a technique for allowing multiple channels and paths to share the same link, typified by the ability to give the bandwidth of a temporarily idle channel to another channel.

Stick and Click (SC) - Designation for an Optical Connector featuring a 2.5 mm physically contacting ferrule with a push-pull mating design. Commonly referred to as Structured Cabling, Structured Connectors or Stick and Click

Stick and Turn (ST) - A fiber-optic connector designed by AT&T which uses the bayonet style coupling rather than screw-on as the SMA uses. The ST is generally considered the eventual replacement for the SMA type connector.

Store-and-Forward - the technique of receiving a message, storing it until the proper outgoing line is available, then retransmitting it, with no direct connection between incoming and outgoing lines.

Straight Tip (ST) - see *Stick and Turn*.

Structured Cabling (SC) - see *Stick and Click.*

Structured Connectors (SC) - see *Stick and Click*.

Sublayer - a logical subdivision of a layer.

SubNetwork Access Protocol (SNAP) - a specially reserved variant of IEEE 802.2 encoding SNAP indicates to look further into the packet where it will fine a Type field.

Subscriber Network Interface (SNI) - the interface between an SMDS end user's CPE and the network directly serving the end user, supported by either a DS1 or DS3 access arrangement.

Super Frame (SF) - a term used to describe the repeating 12 D4 frame format that composes a standard (non-ESF) T1 service.

Super User - a login ID that allows unlimited access to the full range of a device's functionality, including especially the ability to reconfigure the device and set passwords.

Sustainable Cell Rate (SCR) - ATM Forum parameter defined for traffic management. For VBR connections, SCR determines the long-term average cell rate that can be transmitted.

Sustained Information Rate (SIR) - In ATM this refers to the long-term average data transmission rate across the User-to-Network Interface. In SMDS this refers to the committed information rate (similar to CIR for Frame Relay Service).

Switch - Equipment used to interconnect lines and trunks.

Switched Connection - A connection established via signaling.

Switched Multimegabit Data Service (SMDS) - a high-speed, datagram-based, public data network service expected to be widely used by telephone companies in their data networks.

Switched Virtual Channel Connection (SVCC) - A Switched VCC is one which is established and taken down dynamically through control signaling. A Virtual Channel Connection (VCC) is an ATM connection where switching is performed on the VPI/VCI fields of each cell.

Switched Virtual Circuit (or Channel) (SVC) - a channel established on demand by network signalling, used for information transport between two locations and lasting only for the duration of the transfer; the datacom equivalent of a dialed telephone call.

Switched Virtual Path Connection (SVPC) - a connection which is established and taken down dynamically through control signaling. A Virtual Path Connection (VPC) is an ATM connection where switching is performed on the VPI field only of each cell.

Switching System - A set of one or more systems that act together and appear as a single switch for the purposes of PNNI routing.

Symmetric Connection - a connection with the same bandwidth specified for both directions.

Synchronous - signals that are sourced from the same timing reference and hence are identical in frequency.

Synchronous Data Link Control (SDLC) - IBM's data link protocol used in SNA networks.

Synchronous Optical Network (SONET) - a body of standards that defines all aspects of transporting and managing digital traffic over optical facilities in the public network.

Synchronous Payload Envelope (SPE) - the payload field plus a little overhead of a basic SONET signal.

Synchronous Transfer Mode (STM) - a transport and switching method that depends on information occurring in regular, fixed patterns with respect to a reference such as a frame pattern.

Synchronous Transport Signal (STS) - a SONET electrical signal rate.

Systeme En Coleur Avec Memoire (SECAM) - Sequential and Memory Color Television - Started in France in the late 60s, and used by other countries with a political affiliation. This is. The B-Y and R-Y signals are transmitted on alternate lines modulated on an FM subcarrier. The memory is a one line delay line in the receiver to make both color difference signals available at the same time on all lines. Due to FM, the signal is robust in difficult terrain.

Systems Network Architecture (SNA) - a proprietary networking architecture used by IBM and IBM-compatible mainframe computers.

T1 - a specification for a transmission line. The specification details the input and output characteristics and the bandwidth. T1 lines run at 1.544 Mbps and provide for 24 data channels. In common usage, the term “T1” is used interchangeably with “DS1.”

T1 Link - A wideband digital carrier facility used for transmission of digitized voice, digital data, and digitized image traffic. This link is composed of two twisted-wire pairs that can carry 24 digital channels, each operating at 64K bps at the aggregate rate of 1.544M bps, full duplex. Also referred to as DS-1.

T3 - a specification for a transmission line, the equivalent of 28 T1 lines. T3 lines run at 44.736 Mbps. In common usage, the term “T3” is used interchangeably with “DS3.”

Tachometer - in *ForeView*, the tachometer shows the level of activity on a given port. The number in the tachometer shows the value of a chosen parameter in percentage, with a colored bar providing a semi-logarithmic representation of that percentage.

Tagged Cell Rate (TCR) - An ABR service parameter, TCR limits the rate at which a source may send out-of-rate forward RM-cells. TCR is a constant fixed at 10 cells/second.

Telephony - The conversion of voices and other sounds into electrical signals which are then transmitted by telecommunications media.

Telnet - a TCP/IP protocol that defines a client/server mechanism for emulating directly-connected terminal connections.

Terminal Equipment (TE) - Terminal equipment represents the endpoint of ATM connection(s) and termination of the various protocols within the connection(s).

Throughput - Measurement of the total useful information processed or communicated by a computer during a specified time period, i.e. packets per second.

Time Division Multiplexing (TDM) - a method of traditional digital multiplexing in which a signal occupies a fixed, repetitive time slot within a higher-rate signal.

Token Ring - a network access method in which the stations circulate a token. Stations with data to send must have the token to transmit their data.

topology - a program that displays the topology of a FORE Systems ATM network. An updated topology can be periodically re-displayed by use of the interval command option.

Traffic - the calls being sent and received over a communications network. Also, the packets that are sent on a data network.

Traffic Management (TM) - The traffic control and congestion control procedures for ATM. ATM layer traffic control refers to the set of actions taken by the network to avoid congestion conditions. ATM layer congestion control refers to the set of actions taken by the network to minimize the intensity, spread and duration of congestion. The following functions form a framework for managing and controlling traffic and congestion in ATM networks and may be used in appropriate combinations:

Connection Admission Control
Feedback Control
Usage Parameter Control
Priority Control
Traffic Shaping
Network Resource Management
Frame Discard
ABR Flow Control

Traffic Parameter - A parameter for specifying a particular traffic aspect of a connection.

Trailer - the protocol control information located at the end of a PDU.

Transit Delay - the time difference between the instant at which the first bit of a PDU crosses one designated boundary, and the instant at which the last bit of the same PDU crosses a second designated boundary.

Transmission Control Protocol (TCP) - a specification for software that bundles and unbundles sent and received data into packets, manages the transmission of packets on a network, and checks for errors.

Transmission Control Protocol/Internet Protocol (TCP/IP) - a set of communications protocols that has evolved since the late 1970s, when it was first developed by the Department of Defense. Because programs supporting these protocols are available on so many different computer systems, they have become an excellent way to connect different types of computers over networks.

Transmission Convergence (TC) - generates and receives transmission frames and is responsible for all overhead associated with the transmission frame. The TC sublayer packages cells into the transmission frame.

Transmission Convergence Sublayer (TCS) - This is part of the ATM physical layer that defines how cells will be transmitted by the actual physical layer.

Transparent Asynchronous Transmitter/Receiver Interface (TAXI) - Encoding scheme used for FDDI LANs as well as for ATM; supports speed typical of 100 Mbps over multimode fiber.

Transport Layer - Layer Four of the OSI reference model that is responsible for maintaining reliable end-to-end communications across the network.

Trap - a program interrupt mechanism that automatically updates the state of the network to remote network management hosts. The SNMP agent on the switch supports these SNMP traps.

Trivial File Transfer Protocol (TFTP) - Part of IP, a simplified version of FTP that allows files to be transferred from one computer to another over a network.

Twisted Pair - Insulated wire in which pairs are twisted together. Commonly used for telephone connections, and LANs because it is inexpensive.

Unassigned Cells - a generated cell identified by a standardized virtual path identifier (VPI) and virtual channel identifier (VCI) value, which does not carry information from an application using the ATM Layer service.

Unavailable Seconds (UAS) - a measurement of signal quality. Unavailable seconds start accruing when ten consecutive severely errored seconds occur.

UNI 3.0/3.1 - the User-to-Network Interface standard set forth by the ATM Forum that defines how private customer premise equipment interacts with private ATM switches.

Unicasting - The transmit operation of a single PDU by a source interface where the PDU reaches a single destination.

Universal Test & Operations Interface for ATM (UTOPIA) - Refers to an electrical interface between the TC and PMD sublayers of the PHY layer.

Unshielded Twisted Pair (UTP) - a cable that consists of two or more insulated conductors in which each pair of conductors are twisted around each other. There is no external protection and noise resistance comes solely from the twists.

Unspecified Bit Rate (UBR) - a type of traffic that is not considered time-critical (e.g., ARP messages, pure data), allocated whatever bandwidth is available at any given time. UBR traffic is given a “best effort” priority in an ATM network with no guarantee of successful transmission.

Uplink - Represents the connectivity from a border node to an upnode.

Usage Parameter Control (UPC) - mechanism that ensures that traffic on a given connection does not exceed the contracted bandwidth of the connection, responsible for policing or enforcement. UPC is sometimes confused with congestion management (see *congestion management*).

User Datagram Protocol (UDP) - the TCP/IP transaction protocol used for applications such as remote network management and name-service access; this lets users assign a name, such as “RVAX*2,S,” to a physical or numbered address.

User-to-Network Interface (UNI) - the physical and electrical demarcation point between the user and the public network service provider.

V.35 - ITU-T standard describing a synchronous, physical layer protocol used for communications between a network access device and a packet network. V.35 is most commonly used in the United States and Europe, and is recommended for speeds up to 48 Kbps.

Variable Bit Rate (VBR) - a type of traffic that, when sent over a network, is tolerant of delays and changes in the amount of bandwidth it is allocated (e.g., data applications).

Virtual Channel (or Circuit) (VC) - a communications path between two nodes identified by label rather than fixed physical path.

Virtual Channel Connection (VCC) - a unidirectional concatenation of VCLs that extends between the points where the ATM service users access the ATM Layer. The points at which the ATM cell payload is passed to, or received from, the users of the ATM Layer (i.e., a higher layer or ATMM-entity) for processing signify the endpoints of a VCC.

Virtual Channel Identifier (VCI) - the address or label of a VC; a value stored in a field in the ATM cell header that identifies an individual virtual channel to which the cell belongs. VCI values may be different for each data link hop of an ATM virtual connection.

Virtual Channel Link (VCL) - a means of unidirectional transport of ATM cells between the point where a VCI value is assigned and the point where that value is translated or removed.

Virtual Channel Switch - a network element that connects VCLs. It terminates VPCs and translates VCI values. The Virtual Channel Switch is directed by Control Plane functions and relays the cells of a VC.

Virtual Connection - an endpoint-to-endpoint connection in an ATM network. A virtual connection can be either a virtual path or a virtual channel.

Virtual Local Area Network (VLAN) - Work stations connected to an intelligent device which provides the capabilities to define LAN membership.

Virtual Network Software (VINES) - Banyan's network operating system based on UNIX and its protocols.

Virtual Path (VP) - a unidirectional logical association or bundle of VCs.

Virtual Path Connection (VPC) - a concatenation of VPLs between virtual path terminators (VPTs). VPCs are unidirectional.

Virtual Path Identifier (VPI) - the address or label of a particular VP; a value stored in a field in the ATM cell header that identifies an individual virtual path to which the cell belongs. A virtual path may comprise multiple virtual channels.

Virtual Path Link (VPL) - a means of unidirectional transport of ATM cells between the point where a VPI value is assigned and the point where that value is translated or removed.

Virtual Path Switch - a network element that connects VPLs, it translates VPI (not VCI) values and is directed by Control Plane functions. The Virtual Path Switch relays the cells of a Virtual Path.

Virtual Path Terminator (VPT) - a system that unbundles the VCs of a VP for independent processing of each VC.

Virtual Private Data Network (VPDN) - a private data communications network built on public switching and transport facilities rather than dedicated leased facilities such as T1s.

Virtual Private Network (VPN) - a private voice communications network built on public switching and transport facilities rather than dedicated leased facilities such as T1s.

Virtual Source/Virtual Destination (VS/VD) - An ABR connection may be divided into two or more separately controlled ABR segments. Each ABR control segment, except the first, is sourced by a virtual source. A virtual source implements the behavior of an ABR source endpoint. Backwards RM-cells received by a virtual source are removed from the connection. Each ABR control segment, except the last, is terminated by a virtual destination. A virtual destination assumes the behavior of an ABR destination endpoint. Forward RM-cells received by a virtual destination are turned around and not forwarded to the next segment of the connection.

Virtual Tributary (VT) - a structure used to carry payloads such as DS1s that run at significantly lower rates than STS-1s.

Warm Start Trap - an SNMP trap which indicates that SNMP alarm messages or agents have been enabled.

Wide-Area Network (WAN) - a network that covers a large geographic area.

Wideband Channel - Communications channel with more capacity (19.2K bps) than the standard capacity of a voice grade line.

X.21 - ITU-T standard for serial communications over synchronous digital lines. The X.21 protocol is used primarily in Europe and Japan.

X.25 - a well-established data switching and transport method that relies on a significant amount of processing to ensure reliable transport over metallic media.

Yellow Alarm - An alarm signal sent back toward the source of a failed signal due to the presence of an AIS (may be used by APS equipment to initiate switching).

Zero Byte Time Slot Interchange (ZBTSI) - A technique used with the T carrier extended superframe format (ESF) in which an area in the ESF frame carries information about the location of all-zero bytes (eight consecutive “0”s) within the data stream.

Zero Code Suppression - The insertion of a “1” bit to prevent the transmission of eight or more consecutive “0” bits. Used primarily with T1 and related digital telephone company facilities, which require a minimum “1’s density” in order to keep the individual subchannels of a multiplexed, high speed facility active.

Zero-Bit Insertion - A technique used to achieve transparency in bit-oriented protocols. A zero is inserted into sequences of one bits that cause false flag direction.

Index

Numerics

10 Gbps and 20 Gbps LEDs . . . . . 1 - 6
10 / 100BaseT Ethernet port . . . . . 1 - 8

A

AC power
- connecting to . . . . . 2 - 18
- hot-swapping modules . . . . . 3 - 5
- requirements for . . . . . 2 - 5

AC power supply modules . . . . . 1 - 9
air flow . . . . . 2 - 3
ARP server . . . . . 2 - 24
ATM port cards . . . . . 1 - 2, 1 - 9

B

blanks, port card . . . . . 3 - 3
bootp
- adding a switch entry in the bootptab file . . . . . 4 - 25
- setting up a server . . . . . 4 - 24

C

cabinet mounting the *ESX*-3000 . . . . . 2 - 10
cabinet shelf . . . . . 2 - 9, 2 - 10, 2 - 13
cable clamps . . . . . 2 - 10, 2 - 13
cable combs . . . . . 1 - 13, 2 - 16
cable management system . . . . . 1 - 13, 2 - 16
chapter summaries i
classical IP . . . . . 2 - 23
configuration database (CDB) . . . . . 1 - 5
configuring
- ARP server . . . . . 2 - 24
- classical IP . . . . . 2 - 23
- Ethernet IP . . . . . 2 - 22
- FORE IP . . . . . 2 - 23
- IP addresses . . . . . 2 - 21
- IP routes . . . . . 2 - 25
- LAN emulation . . . . . 2 - 24
- modem . . . . . 2 - 20
- serial port . . . . . 2 - 17
- subnet mask . . . . . 2 - 22

connecting a terminal . . . . . 2 - 17

D

deleting current software . . . . . 4 - 8
display LED . . . . . 1 - 5
- Autoboot ? . . . . . 1 - 5
- Ethernet ? . . . . . 1 - 5
- Flash ? . . . . . 1 - 5
- menu choices . . . . . 1 - 5
- Monitor ? . . . . . 1 - 5
- ShowMac ? . . . . . 1 - 5
- switch name . . . . . 1 - 5

downloading
- adding a switch entry . . . . . 4 - 25
- Mini Loader . . . . . 4 - 5
- setting up a bootp server . . . . . 4 - 24
- with bootp . . . . . 4 - 24, 4 - 27

E

ejection / insertion levers . . . . . 1 - 8, 3 - 1
electrical precautions . . . . . 2 - 5

environment
requirements for installation . . . . . 2 - 3
ESD precautions . . . . . 2 - 5
ESX-3000
air flow around . . . . . 2 - 3
cabinet mounting . . . . . 2 - 10
connecting a terminal to . . . . . 2 - 17
depth of . . . . . 2 - 2
front mounting . . . . . 2 - 13
general hardware configuration . . . . . 1 - 2
hardware maintenance . . . . . 3 - 1
location of . . . . . 2 - 4
powering up the . . . . . 2 - 18
specifications . . . . . A - 1
subsequent operation after initial configuration . . . . . 2 - 26
unpacking & checking . . . . . 2 - 7
weight of . . . . . 2 - 2, 2 - 12, 2 - 15
Ethernet port . . . . . 1 - 8
Ethernet port cards . . . . . 1 - 2, 1 - 9

F

fan tray . . . . . 1 - 8
handles . . . . . 2 - 2
hot-swapping . . . . . 3 - 7
FLASH, emptying . . . . . 4 - 6
footprint, *ESX*-3000 . . . . . 2 - 2
FORE IP . . . . . 2 - 23
front mounting the *ESX*-3000 . . . . . 2 - 13
front panel . . . . . 2 - 10, 2 - 13
FTP
using to upgrade software . . . . . 4 - 12

H

handles, fan tray . . . . . 2 - 2
hardware components . . . . . 1 - 3
cable management system . . . . . 1 - 13
fan tray . . . . . 1 - 8
measurements . . . . . 2 - 2
power supply modules . . . . . 1 - 9
specifications . . . . . A - 1
switch control processor / fabric module . . . . . 1 - 3
hardware maintenance . . . . . 3 - 1
hardware overview . . . . . 1 - 1
hot-swapping
fan trays . . . . . 3 - 7
port cards . . . . . 3 - 3
power supply modules . . . . . 3 - 5
humidity
operating . . . . . 2 - 3, A - 2
storage . . . . . A - 2

I

information indicators iv
installation . . . . . 2 - 1
hardware site preparation . . . . . 2 - 2
rack requirements . . . . . 2 - 3
IP address
configuring . . . . . 2 - 21
configuring subnet mask . . . . . 2 - 22
IP routes . . . . . 2 - 25

K

kit, rack mount . . . . . 2 - 8

L

LAN emulation . . . . . 2 - 24
LAN segmentation . . . . . 1 - 1
laser warning v
LED power supply status . . . . . 1 - 11
Link LED . . . . . 1 - 8
LIS . . . . . 2 - 21
local interface . . . . . 2 - 22, 2 - 23

location considerations . . . . . 2 - 4
logical IP subnet . . . . . 2 - 21

M

Mini Loader . . . . . 1 - 5
downloading . . . . . 4 - 5
requirements for upgrading . . . . . 4 - 5
setting gateway addresses to upgrade software . . . . . 4 - 20
setting the switch IP address . . . . . 4 - 20
upgrading switch to . . . . . 4 - 6
modem
configuration . . . . . 2 - 20
parameters . . . . . 2 - 20
speed . . . . . 2 - 20
multimode OC-12c / STM-4c specifications . . . . . A - 4

N

network classes . . . . . 2 - 22
NEXT / SELECT rocker switch . . . . . 1 - 5, 1 - 6

O

OC-12c / STM-4c multimode specifications . . . . . A - 4
OC-12c / STM-4c singlemode specifications . . . . . A - 5, A - 6
operating environment requirements . . . . 2 - 3
overtemperture, power supply . . . . . 1 - 12
overvoltage, power supply . . . . . 1 - 12

P

parameters
modem . . . . . 2 - 20
physical location considerations . . . . . 2 - 4
pinouts . . . . . 1 - 7
port card
blanks . . . . . 3 - 3
hot-swapping . . . . . 3 - 3
port card cable hangers . . . . . 1 - 13, 2 - 16
port speed, maximum . . . . . A - 2
power supply modules . . . . . 1 - 9
front panel detail . . . . . 1 - 10
hot-swapping . . . . . 3 - 5
input undervoltage . . . . . 1 - 12
number required for redundancy . . . . 1 - 9
number required to provide power . . 1 - 9
output overvoltage . . . . . 1 - 12
overtemperature . . . . . 1 - 12
requirements for . . . . . 2 - 5
requirements formula . . . . . 1 - 9
rules of thumb . . . . . 1 - 9
shutdown conditions . . . . . 1 - 12
status of . . . . . 1 - 11
troubleshooting . . . . . 1 - 11
powering up the *ESX*-3000 . . . . . 2 - 18
preface to manual i

R

rack
mount kit . . . . . 2 - 8
mounting procedures . . . . . 2 - 9
operating environment . . . . . 2 - 3
requirements for mounting into . . . . . 2 - 3
redundancy, power supplies required for . . . . . 1 - 9
replacing
fan trays . . . . . 3 - 7
port cards . . . . . 3 - 3
power supply modules . . . . . 3 - 5
SCP / fabric modules . . . . . 3 - 1
RESET button . . . . . 1 - 6
RS-232 serial port . . . . . 1 - 7
pinouts . . . . . 1 - 7

S

safety precautions . . . . . 2 - 6
serial port . . . . . 1 - 7, 2 - 17, 2 - 20
configuration . . . . . 2 - 17
server
setting up a bootp . . . . . 4 - 24
shelf angles . . . . . 2 - 10
shelf supports . . . . . 2 - 13
shutdown conditions, power supply . . . 1 - 12
site preparation . . . . . 2 - 2
ESX-3000 footprint . . . . . 2 - 2
rack requirements . . . . . 2 - 3
software
adding a switch entry in the bootptab file . . . . . 4 - 25
adding the /etc/services line . . . . . 4 - 27
booting/upgrading with Mini Loader . . . . . 4 - 17
changing between versions . . . . . 4 - 15
changing the current version . . . . . 4 - 15
deleting current software . . . . . 4 - 8
displaying current version . . . . . 4 - 15
downloading Mini Loader . . . . . 4 - 5
downloading with bootp (inetd.conf) . . . . . 4 - 27
emptying the FLASH . . . . . 4 - 6
obtaining the upgrade via FTP . . . . . 4 - 2
overview of downloading with bootp . . . . . 4 - 24
requirements for Mini Loader . . . . . 4 - 5
requirements for upgrading with Mini Loader . . . . . 4 - 5
setting up a bootp server . . . . . 4 - 24
setting up a TFTP server . . . . . 4 - 27
setting up the tftpboot directory to upgrade . . . . . 4 - 27
upgrade file placement . . . . . 4 - 9
upgrade instructions . . . . . 4 - 1
upgrade requirements . . . . . 4 - 2
upgrading to Mini Loader . . . . . 4 - 6
using FTP to upgrade . . . . . 4 - 12
using TFTP to upgrade . . . . . 4 - 9
switch control processor (SCP) . . . . . 1 - 3
10 Gbps and 20 Gbps LEDs . . . . . 1 - 6
10/100BaseT Ethernet port . . . . . 1 - 8
display LED . . . . . 1 - 5
ejection/insertion levers . . . . . 1 - 8
NEXT/SELECT rocker switch . . . . . 1 - 6
replacement . . . . . 3 - 1
RESET Button . . . . . 1 - 6
RS-232 serial port . . . . . 1 - 7
specifications . . . . . 1 - 4
switch name . . . . . 1 - 5
switching capacity . . . . . 1 - 1

T

technical support
contacting ii
temperature
operating . . . . . A - 2
storage . . . . . A - 2
terminal, connecting to . . . . . 2 - 17
TFTP
setting up a server . . . . . 4 - 27
using to upgrade software . . . . . 4 - 9
thermal dissipation . . . . . A - 2
traffic policing . . . . . A - 2
troubleshooting power supply modules . . . . . 1 - 11
tty-type device . . . . . 2 - 17, 2 - 18
TX/RX LED . . . . . 1 - 8
typographical styles iii

U

undervoltage, power supply . . . . . 1 - 12
unpacking & checking the *ESX*-3000 . . . . . 2 - 7

V

ventilation . . . . . 2 - 3