CEC-Plus Installation and User's Manual

MANU0081-04 - Rev. A - 8/17/98

Software Version 5.3.x

FORE Systems, Inc.

1000 FORE Drive
Warrendale, PA 15086-7502
Phone: 724-742-4444
FAX: 724-742-7742

http://www.fore.com

Legal Notices

Copyright © 1998 FORE Systems, Inc. All rights reserved. FORE Systems is a registered trademark, and *ForeRunner, ForeThought, ForeView, PowerHub,* and *CellPath* are trademarks of FORE Systems, Inc. All other brands or product names are trademarks or registered trademarks of their respective holders.

U.S. Government Restricted Rights. If you are licensing the Software on behalf of the U.S. Government ("Government"), the following provisions apply to you. If the Software is supplied to the Department of Defense ("DoD"), it is classified as "Commercial Computer Software" under paragraph 252.227-7014 of the DoD Supplement to the Federal Acquisition Regulations ("DFARS") (or any successor regulations) and the Government is acquiring only the license rights granted herein (the license rights customarily provided to non-Government users). If the Software is supplied to any unit or agency of the Government other than DoD, it is classified as "Restricted Computer Software" and the Government's rights in the Software are defined in paragraph 52.227-19 of the Federal Acquisition Regulations ("FAR") (or any successor regulations) or, in the cases of NASA, in paragraph 18.52.227-86 of the NASA Supplement to the FAR (or any successor regulations).

Printed in the USA.

No part of this work covered by copyright may be reproduced in any form. Reproduction, adaptation, or translation without prior written permission is prohibited, except as allowed under the copyright laws.

This publication is provided by FORE Systems, Inc. "as-is" without warranty of any kind, either express or implied, including, but not limited to, the implied warranties or conditions of merchantability or fitness for a particular purpose. FORE Systems, Inc. shall not be liable for any errors or omissions which may occur in this publication, nor for incidental or consequential damages of any kind resulting from the furnishing, performance, or use of this publication.

Information published here is current or planned as of the date of publication of this document. Because we are improving and adding features to our products continuously, the information in this document is subject to change without notice.

RESTRICTED RIGHTS LEGEND. Use, duplication, or disclosure by the government is subject to restrictions as set forth in subparagraph (c)(1)(ii) of the Rights in Technical Data and Computer Software clause at DFARS 252.227-7013 (October 1988) and FAR 52.227-19 (June 1987).

The VxWorks and FlashLib software are licensed from Wind River Systems, Inc., Copyright ©1984-1998.

FCC CLASS A NOTICE

WARNING: Changes or modifications to this unit not expressly approved by the party responsible for compliance could void this user's authority to operate this equipment.

NOTE: The CEC-Plus has been tested and found to comply with the limits for a Class A digital device, pursuant to Part 15 of the FCC Rules. These limits are designed to provide reasonable protection against harmful interference when the equipment is operated in a commercial environment. This equipment generates, uses, and can radiate radio frequency energy and, if not installed and used in accordance with the instruction manual, may cause harmful interference to radio communications. Operation of the equipment in a residential area is likely to cause harmful interference in which case the user will be required to correct the interference at his own expense.

DOC CLASS A NOTICE

This digital apparatus does not exceed Class A limits for radio noise emission for a digital device as set out in the Radio Interference Regulations of the Canadian Department of Communications.

Le present appareil numerique n'emet pas de bruits radioelectriques depassant les limites applicables aux appareils numeriques de la class A prescrites dans le reglement sur le brouillage radioelectrique edicte par le ministere des Communications du Canada.

VCCI CLASS 1 NOTICE

この装置は、第一種情報処理装置（商工業地域において使用されるべき情報処理装置）で商工業地域での電波障害防止を目的とした情報処理装置等電波障害自主規制協議会(VCCI)基準に適合しております。

従って、住宅地域またはその隣接した地域で使用すると、ラジオ、テレビジョン受信機等に受信障害を与えることがあります。

取扱説明書に従って正しい取り扱いをして下さい。

This equipment is in the Class 1 category (Information Technology Equipment to be used in commercial and / or industrial areas) and conforms to the standards set by the Voluntary Control Council For Interference by Information Technology Equipment aimed at preventing radio interference in commercial and / or industrial areas.Consequently, when used in a residential area or in an adjacent area thereto, radio interference may be caused to radios and TV receivers, etc. Read the instructions for correct handling.

SAFETY CERTIFICATIONS

ETL certified to meet Information Technology Equipment safety standards UL 1950, CSA 22.2 No. 950, and EN 60950.

Table of Contents

Preface

Chapter Summaries i
Technical Support ii
Typographical Styles iii
Important Information Indicators iv
Safety Precautions v
Modifications to Equipment v
Placement of a FORE Systems Product v
Power Cord Connection vi

CHAPTER 1 Introduction

1.1 Overview . . . . . 1 - 1
1.1.1 Features . . . . . 1 - 2
1.1.2 CEC-Plus Failover . . . . . 1 - 2
1.1.3 Configuration . . . . . 1 - 2
1.2 Distributed Timing Overview . . . . . 1 - 3
1.2.1 Operational Model . . . . . 1 - 4
1.2.2 Operational Modes . . . . . 1 - 4
1.2.2.1 Hitless Modes . . . . . 1 - 4
1.2.2.1.1 Automatic Mode . . . . . 1 - 5
1.2.2.1.2 BITS Mode . . . . . 1 - 6
1.2.2.2 Manual Modes . . . . . 1 - 7
1.3 Timing Configuration Guidelines . . . . . 1 - 8
1.3.1 IP Connectivity between TCMs and SCPs . . . . . 1 - 8
1.3.2 Timing Configuration . . . . . 1 - 9
1.3.2.1 Automatic Mode Operation . . . . . 1 - 10
1.3.2.1.1 Operational Notes for Automatic Mode Configuration . . . . . 1 - 10
1.3.2.1.2 Fabric Timing Configuration . . . . . 1 - 11
1.3.2.1.3 TCM Timing Configuration . . . . . 1 - 12
1.3.2.2 BITS Mode Operation . . . . . 1 - 13
1.3.2.2.1 Operational Notes for BITS Mode Configuration . . 1 - 13
1.3.2.2.2 Fabric Timing Configuration . . . . . 1 - 13
1.3.2.2.3 TCM Timing Configuration . . . . . 1 - 13

1.4 CEC-Plus Hardware . . . . . 1 - 14
1.4.1 Card Carrier Hardware . . . . . 1 - 14
1.4.2 TCM Hardware . . . . . 1 - 15
1.4.2.1 DB-25F Relay/Input Connector . . . . . 1 - 15
1.4.2.2 Relay Status LEDs . . . . . 1 - 17
1.4.2.3 10Base-T Ethernet Port . . . . . 1 - 17
1.4.2.4 SELECT/NEXT Pushbuttons . . . . . 1 - 18
1.4.2.5 DB-9F Control Port Connector . . . . . 1 - 19
1.4.2.6 Status LED . . . . . 1 - 20
1.4.2.7 BITS Clock Input and Output Ports . . . . . 1 - 20
1.4.2.8 Reset Button. . . . . 1 - 22
1.5 TCM Replacement. . . . . 1 - 23

CHAPTER 2 EMI Overview

2.1 Login from Serial Port or Telnet . . . . . 2 - 3
2.1.1 Login from Serial Port . . . . . 2 - 3
2.1.2 Login from Telnet. . . . . 2 - 4
2.2 EMI Root Menu for an Open Session . . . . . 2 - 6
2.2.1 About Command . . . . . 2 - 7
2.2.2 Close Command . . . . . 2 - 7
2.2.3 Configuration Commands . . . . . 2 - 8
2.2.4 Exit Command. . . . . 2 - 8
2.2.5 Help Command . . . . . 2 - 9
2.2.6 History Command . . . . . 2 - 10
2.2.7 Open Command . . . . . 2 - 10
2.2.8 Operation Commands . . . . . 2 - 11
2.2.9 Ping Command . . . . . 2 - 11
2.2.10 Redo Command . . . . . 2 - 12
2.2.11 Rows Command . . . . . 2 - 13
2.2.12 Statistics Commands. . . . . 2 - 13
2.2.13 Top Command . . . . . 2 - 13
2.2.14 Up Command . . . . . 2 - 14

CHAPTER 3 EMI Configuration Commands

3.1 Alarms Configuration Commands . . . . . 3 - 2
3.1.1 Displaying Alarm Conditions . . . . . 3 - 2
3.1.2 Enabling an Alarm . . . . . 3 - 3
3.1.3 Disabling an Alarm . . . . . 3 - 4
3.1.4 Configuring an Alarm Relay . . . . . 3 - 5
3.1.4.1 Setting an Alarm Relay. . . . . 3 - 5
3.1.4.2 Displaying the Alarm Relays. . . . . 3 - 5
3.1.5 Resetting an Alarm . . . . . 3 - 6

3.2 IP Configuration Commands . . . . . 3 - 7
3.2.1 Configuring the IP Address . . . . . 3 - 7
3.2.2 Configuring the IP State . . . . . 3 - 8
3.2.3 Configuring the IP Broadcast Address . . . . . 3 - 8
3.2.4 Configuring the IP Subnet Mask. . . . . 3 - 8
3.2.5 Configuring IP Routes . . . . . 3 - 9
3.2.5.1 Adding an IP Route . . . . . 3 - 9
3.2.5.2 Deleting an IP Route . . . . . 3 - 10
3.2.5.3 Showing the IP Routes . . . . . 3 - 10
3.2.6 Displaying the IP Interface Configuration . . . . . 3 - 11
3.2.7 Unconfiguring an IP Interface . . . . . 3 - 12
3.3 Serial Port Configuration . . . . . 3 - 13
3.3.1 Displaying Serial Port Information . . . . . 3 - 13
3.4 SNMP Configuration Commands . . . . . 3 - 14
3.4.1 Configuring the SNMP Community Access . . . . . 3 - 14
3.4.2 Configuring SNMP Traps . . . . . 3 - 14
3.4.2.1 Deleting an SNMP Trap Entry . . . . . 3 - 15
3.4.2.2 Creating an SNMP Trap Entry . . . . . 3 - 16
3.4.2.3 Displaying the SNMP Trap Entries . . . . . 3 - 16
3.5 System Configuration Commands . . . . . 3 - 17
3.5.1 Changing the System Protocol . . . . . 3 - 17
3.5.2 Displaying the System Configuration . . . . . 3 - 17
3.5.3 System Log Configuration Commands. . . . . 3 - 18
3.5.3.1 Displaying the Address of the System Log Host . . . . . 3 - 18
3.5.3.2 Setting the Address of the System Log Host. . . . . 3 - 18
3.5.3.3 Deleting the Address of the System Log Host. . . . . 3 - 19
3.5.3.4 Turning Off or Turning On System Log Messages to the Console . . . . . 3 - 20
3.5.4 EMI Timeout Configuration Command . . . . . 3 - 21
3.6 TCM Configuration Commands . . . . . 3 - 22
3.6.1 Setting or Changing the TCM’s Name . . . . . 3 - 22
3.6.2 Displaying TCM Information . . . . . 3 - 22
3.6.3 Setting or Changing the Timezone . . . . . 3 - 24
3.7 Timing Configuration Commands . . . . . 3 - 26
3.7.1 Configuring the Timing Reference’s Administrative Status. . . . . 3 - 27
3.7.2 BITS Timing Configuration Commands . . . . . 3 - 28
3.7.2.1 BITS Coding Configuration . . . . . 3 - 28
3.7.2.2 BITS Framing Configuration . . . . . 3 - 29
3.7.2.3 BITS Level Configuration. . . . . 3 - 30
3.7.3 Failover Timing Configuration. . . . . 3 - 30
3.7.3.1 Configuring the Failover Timing Delay. . . . . 3 - 30

3.7.4 Timing Mode Configuration . . . . . 3 - 31
3.7.5 Primary Timing Configuration . . . . . 3 - 32
3.7.6 Displaying Timing References . . . . . 3 - 33
3.7.7 Clearing a Reference Quality Failure. . . . . 3 - 34
3.7.8 Revertive Timing Configuration . . . . . 3 - 34
3.7.8.1 Configuring the Revertive Timing Delay . . . . . 3 - 35
3.7.8.2 Disabling Revertive Switching . . . . . 3 - 35
3.7.8.3 Enabling Revertive Switching . . . . . 3 - 36
3.7.9 Secondary Timing Configuration . . . . . 3 - 36
3.7.10 Displaying Timing . . . . . 3 - 37

CHAPTER 4 EMI Operation Commands

4.1 Configuration Database (CDB) Commands. . . . . 4 - 2
4.1.1 Backing Up the Database . . . . . 4 - 2
4.1.2 Initializing the Database . . . . . 4 - 3
4.1.3 Resetting the Database . . . . . 4 - 3
4.1.4 Restoring the Database. . . . . 4 - 4
4.2 Displaying and Setting the Date and Time . . . . . 4 - 5
4.3 Environment Commands . . . . . 4 - 6
4.3.1 CPU Operation . . . . . 4 - 6
4.3.2 Enclosure Operation Commands . . . . . 4 - 7
4.3.2.1 Displaying the Enclosure Temperature . . . . . 4 - 7
4.3.2.2 Setting the Enclosure Temperature Threshold . . . . . 4 - 7
4.3.3 Switch Fabric Operation . . . . . 4 - 8
4.3.4 Showing Switch Fabric Temperature Information . . . . . 4 - 8
4.3.5 Configuring the Switch Fabric Temperature Thresholds . . . . . 4 - 9
4.3.6 Fan Operation . . . . . 4 - 10
4.3.7 Power Supply Operation . . . . . 4 - 10
4.3.8 Temperature Sensor Operation . . . . . 4 - 12
4.4 FLASH Operation Commands . . . . . 4 - 13
4.4.1 Copying a File to FLASH Memory . . . . . 4 - 13
4.4.2 Deleting a File from FLASH Memory. . . . . 4 - 13
4.4.3 Displaying the FLASH Memory Directory . . . . . 4 - 14
4.4.4 Displaying Free Space on the FLASH File . . . . . 4 - 15
4.4.5 Getting a FLASH File . . . . . 4 - 15
4.4.6 Initializing the FLASH File . . . . . 4 - 15
4.4.7 Putting a FLASH File on a Remote Host . . . . . 4 - 16
4.4.8 Renaming a FLASH File . . . . . 4 - 16
4.5 Login Operation Commands . . . . . 4 - 17
4.5.1 Backing Up the Login File . . . . . 4 - 17
4.5.2 Deleting a User from the Login File . . . . . 4 - 18
4.5.3 Creating a User in the Login File . . . . . 4 - 18

4.5.4 Assigning a Password to a User . . . . . 4 - 18
4.5.5 Restoring the Login File . . . . . 4 - 19
4.5.6 Assigning a New Userid to a User . . . . . 4 - 19
4.5.7 Displaying the Userid Login Information . . . . . 4 - 19
4.5.8 Displaying the Login Userid . . . . . 4 - 19
4.6 Panic Acknowledgment Commands . . . . . 4 - 20
4.6.1 Setting the Panic Response . . . . . 4 - 20
4.6.2 Clearing the Panic Flag . . . . . 4 - 21
4.6.3 Displaying the Panic Dump File . . . . . 4 - 22
4.7 Upgrading the TCM Software . . . . . 4 - 24
4.8 Displaying and Changing the Version of Software . . . . . 4 - 25
4.9 Rebooting the TCM . . . . . 4 - 26

CHAPTER 5 EMI Statistics Commands

5.1 ICMP Statistics . . . . . 5 - 2
5.2 Interface Statistics . . . . . 5 - 5
5.3 IP Statistics . . . . . 5 - 7
5.4 TCP Statistics . . . . . 5 - 10
5.5 UDP Statistics . . . . . 5 - 12

Acronyms

Glossary

Index

Preface

This manual provides information necessary to install the CEC-Plus, and it explains how to configure the CEC-Plus via the Extended Management Interface (EMI). This manual was created for users with various levels of experience. Please read this manual carefully before attempting to perform any of the procedures contained in it. If you have any questions or problems, please contact the FORE Systems' Technical Assistance Center (TAC).

Chapter Summaries

Chapter 1 - Introduction - Describes the basic functionality of the CEC-Plus; its hardware features; and installation, removal, and hot-swap procedures.

Chapter 2 - EMI Overview - Describes the root level of EMI.

Chapter 3 - EMI Configuration Commands - Describes the configuration level of EMI.

Chapter 4 - EMI Operation Commands - Describes the operation level of EMI.

Chapter 5 - EMI Statistics Commands - Describes the statistics level of EMI.

Acronyms - Contains a list of common networking acronyms.

Glossary - Contains definitions for networking terms, both general and ATM-specific.

Technical Support

In the U.S.A., customers can reach FORE Systems' Technical Assistance Center (TAC) using any one of the following methods:

1. Select the "Support" link from FORE's World Wide Web page:

   http://www.fore.com/

2. Send questions, via e-mail, to:

   support@fore.com

3. Telephone questions to "support" at:

   800-671-FORE (3673) or **724-742-6999**

4. FAX questions to "support" at:

   724-742-7900

Technical support for customers outside the United States should be handled through the local distributor or via telephone at the following number:

+1 724-742-6999

No matter which method is used to reach FORE Support, customers should be ready to provide the following:

- A support contract ID number
- The serial number of each product in question
- All relevant information describing the problem or question

Typographical Styles

Throughout this manual, all specific commands meant to be entered by the user appear on a separate line in bold typeface. In addition, use of the `Enter` or `Return` key is represented as `<ENTER>`. The following example demonstrates this convention:

`cd /usr <ENTER>`

File names that appear within the text of this manual are represented in the following style: "...the `fore_install` program installs this distribution."

Command names that appear within the text of this manual are represented in the following style: "...using the **`flush-cache`** command clears the bridge cache."

Subsystem names that appear within the text of this manual are represented in the following style: "...to access the **`bridge`** subsystem..."

Parameter names that appear within the text of this manual are represented in the following style: "...using *`<seg-list>`* allows you to specify the segments for which you want to display the specified bridge statistics."

Any messages that appear on the screen during software installation and network interface administration are shown in `Courier` font to distinguish them from the rest of the text as follows:

```
.... Are all four conditions true?
```

Important Information Indicators

To call your attention to safety and otherwise important information that must be reviewed to ensure correct and complete installation, as well as to avoid damage to the FORE Systems product or to your system, FORE Systems utilizes the following *WARNING/CAUTION/NOTE* indicators.

WARNING statements contain information that is critical to the safety of the operator and/or the system. Do not proceed beyond a ***WARNING*** statement until the indicated conditions are fully understood or met. This information could prevent serious injury to the operator, damage to the FORE Systems product, the system, or currently loaded software, and is indicated as follows:

WARNING!

Hazardous voltages are present. To reduce the risk of electrical shock and danger to personal health, follow the instructions carefully.

CAUTION statements contain information that is important for proper installation/operation. Compliance with **CAUTION** statements can prevent possible equipment damage and/or loss of data and are indicated as follows:

CAUTION

You risk damaging your equipment and/or software if you do not follow these instructions.

NOTE statements contain information that has been found important enough to be called to the special attention of the operator and is set off from the text as follows:

NOTE

If you change the value of the LECS control parameters while the LECS process is running, the new values do not take effect until the LECS process is stopped, and then restarted.

Safety Precautions

For your protection, observe the following safety precautions when setting up equipment:

- Follow all warnings and instructions marked on the equipment.
- Ensure that the voltage and frequency of your power source matches the voltage and frequency inscribed on the equipment's electrical rating label.
- Never push objects of any kind through openings in the equipment. Dangerous voltages may be present. Conductive foreign objects could produce a short circuit that could cause fire, electric shock, or damage to your equipment.

Modifications to Equipment

Do not make mechanical or electrical modifications to the equipment. FORE Systems, Inc., is not responsible for regulatory compliance of a modified FORE product.

Placement of a FORE Systems Product

CAUTION

To ensure reliable operation of your FORE Systems product and to protect it from overheating, openings in the equipment must not be blocked or covered. A FORE Systems product should never be placed near a radiator or heat register.

Power Cord Connection

WARNING!

FORE Systems products are designed to work with single-phase power systems having a grounded neutral conductor. To reduce the risk of electrical shock, do not plug FORE Systems products into any other type of power system. Contact your facilities manager or a qualified electrician if you are not sure what type of power is supplied to your building.

WARNING!

Your FORE Systems product is shipped with a grounding type (3-wire) power cord. To reduce the risk of electric shock, always plug the cord into a grounded power outlet.

CHAPTER 1 Introduction

1.1 Overview

The CEC-Plus is an intelligent environmental/timing management subsystem that is a standard part of the TNX-1100 ATM Switch. The CEC-Plus may be optionally purchased for use in the ASX-1000 ATM Switch or in the MSC-900 Multiservice Concentrator. Some of the features of the CEC-Plus include:

- Hot-swappability
- Redundant environmental monitoring
- Redundant timing input sources
- Support for Stratum 3 or 4 timing synchronization (derived from an external DS1 or E1 source, RJ-48C input and output)
- Isolated internal switch management traffic (from external Ethernets)

The installed CEC-Plus configuration consists of a frame (card carrier and passive backplane interface) and redundant Environmental Control Processor (ECP)/External Synchronization Input (ESI) pairs. The ECP/ESI pair comprises the Timing Control Module (TCM). This configuration provides redundant environmental and system management, as well as high-end distributed timing capabilities (DS1 or E1 BITS interfaces). (See Figure 1.1.)

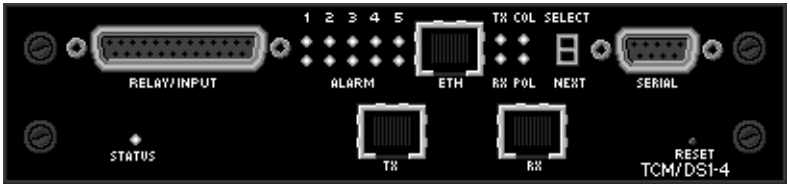

Figure 1.1 - CEC-Plus Timing Control Module (TCM)

CAUTION

Since the CEC-Plus communicates with the fabric SCPs via the backplane, the individual front panel SCP Ethernet connections MUST NOT BE USED when the CEC-Plus is installed.

1.1.1 Features

The CEC-Plus includes the following hardware features:

- 25 MHz Intel i960 CA processor
- 8 MB DRAM
- 256 KB boot PROM
- 2 MB Flash memory
- 114 bytes of non-volatile SRAM
- Self-powered, real-time clock
- Two programmable interval timers
- Dual Ethernet controllers (10Base-T on front panel, 10Base-2 to backplane)

1.1.2 CEC-Plus Failover

The CEC-Plus provides redundant environmental and timing management when two TCMs are installed. The TNX-1100 comes standard with two TCMs installed. The ASX-1000 and the MSC-900 can be optionally configured with either one or two TCMs. However, you need to have two TCMs installed to take advantage of the hardware failover and redundant BITS timing features.

When the CEC-Plus is powered on, each TCM tries to assert itself as master. Whichever TCM starts up first is the master, and the other TCM acts as the standby. During operation, the master TCM periodically transmits a “heartbeat” to the standby TCM. This heartbeat tells the second TCM to remain in standby mode.

In the event of a failure on the master TCM (e.g., power loss, oscillator failure, etc.), the master TCM resets.

NOTE A panic on the master TCM forces it to reset. An ESI failure forces it into standby mode.

Upon reset, the heartbeat stops, informing the standby TCM that it must assume control and become master. The new master TCM remains as such until a similar failure or an external reset.

1.1.3 Configuration

The CEC-Plus can be configured in many ways (e.g., TCM name, enabling and disabling alarms, etc.) through the Extended Management Interface (EMI). For more information about EMI, see Chapters 2 through 5 in this manual.

1.2 Distributed Timing Overview

The CEC-Plus provides network timing source handling, including the following features:

- line timing or BITS timing operation
- specification of two input clocks (primary and secondary sources or redundant BITS sources)
- hitless selection of clock source (following a reference failure or forced reference switch)
- Stratum 3 or Stratum 4 level timing
- Redundant failover of TCM hardware (when two TCMs are installed)

Both TCMs in the CEC-Plus have access to all eight of the switch's fabric exported clocks (fabric 1 primary and secondary, fabric 2 primary and secondary, etc.), and each TCM has a single, front-panel BITS input. In addition to its own front panel BITS, each TCM can access the BITS clock of its redundant partner. The figure below shows the flow of the fabric primary and secondary sources to the TCMs and the TCM output clock to the fabrics.

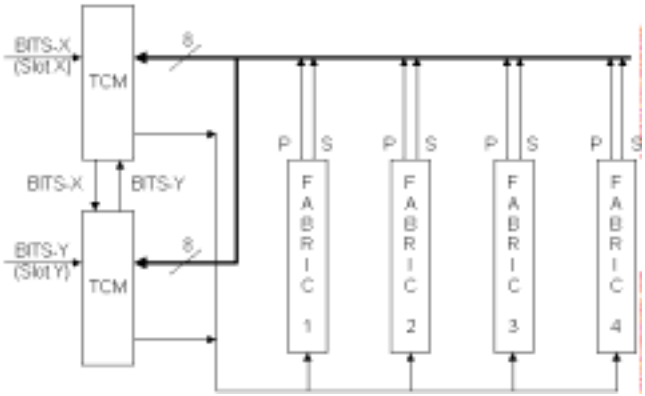

Figure 1.2 - TCM Distributed Timing Flows

The TCM can utilize network module recovered clock sources (line timing) or BITS inputs for generation of a clock source. However, when timing sources are specified, BITS and network module recovered clocks can not be mixed.

1.2.1 Operational Model

In general, the TCM provides for redundant clock source specification (either redundant BITS or primary and secondary network module recovered sources). This allows the TCM to utilize the active clock source until it becomes invalid or is removed, at which time it moves to the backup source. If the primary source recovers, the TCM may revert to using it when network module recovered timing is being utilized. All of these source selection changes occur without any timing hits.

If both timing sources become invalid, the TCM is capable of “holding over” the last valid source.

NOTE

BITS timing mode does not differentiate a primary and secondary source. One BITS input is considered active and the other inactive, but neither is considered a preferred source.

1.2.2 Operational Modes

The TCM supports a number of operational modes, which can be divided into “hitless” modes and “manual” modes.

1.2.2.1 Hitless Modes

These modes of operation provide for hitless switching of clock sources as needed. There are two hitless modes that can be configured via EMI: the network module sources hitless mode (**`conf timing mode automatic`**) and the BITS source hitless mode (**`conf timing mode bits`**).

The automatic mode uses the configurable `primary` and `secondary` settings to determine clock source selection. This selection is done intelligently based on validity of the source and settings for **`conf timing failover delay`**, **`conf timing revertive`** (**`enable`** or **`disable`**), and **`conf timing revertive delay`**.

NOTE

If a user-requested mode selection would result in no valid source clock, the selection is refused.

1.2.2.1.1 Automatic Mode

Figure 1.3 illustrates the operation of the automatic mode.

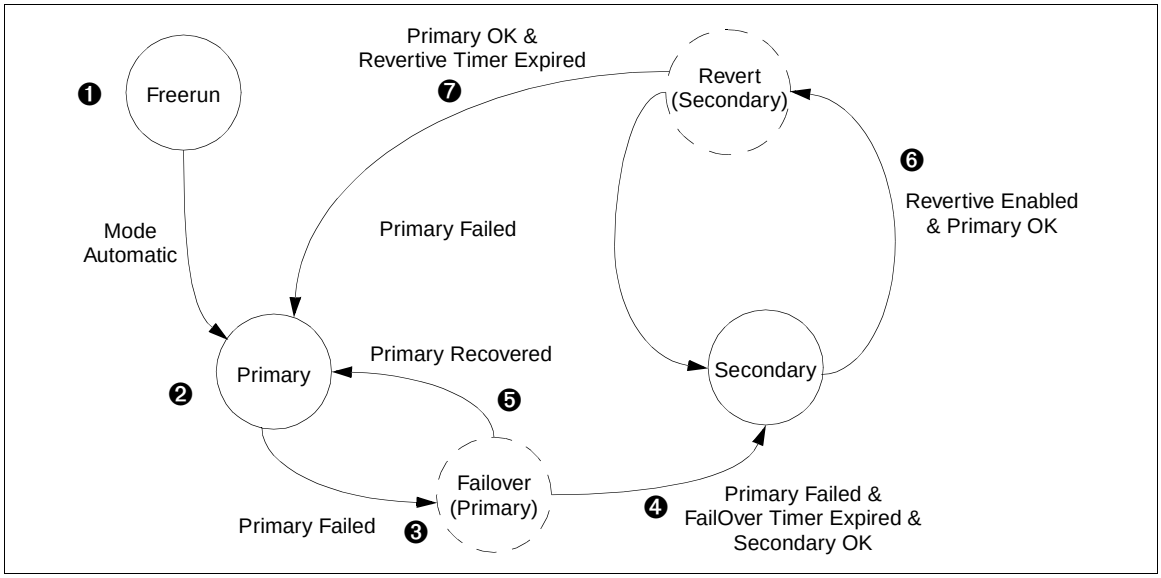

Figure 1.3 - Automatic Timing Mode Operation

While this figure does not document all possible operational states of the TCM, it does highlight the automatic operation when using network module sources. Solid circles represent clock source selections seen on the EMI display. Dashed circles represent internal states (with the external representation shown in parentheses).

Figure 1.3 assumes that the TCM starts in the `freerun` mode ❶, and is then configured to operate in `automatic` mode. If the primary source is valid, the primary source is selected for use ❷ and the current source selection becomes `primary`.

After some amount of time, if the `primary` source fails ❸, the TCM enters the internal failover state. It starts a timer, the length of which is set by **`conf timing failover delay`**. Upon expiration of the timer, if the `secondary` source is valid, the TCM switches to it ❹. Should the `primary` source recover before expiration of the **`conf timing failover delay`**, then the TCM begins using the `primary` source again ❺.

When the current timing reference is the `secondary` source and the `primary` source becomes valid, the TCM enters the internal revert state (if **`conf timing revertive`** is enabled) ❻. Once in this state, the TCM starts a timer, the length of which is set by the **`conf timing revertive delay`**. Upon expiration of the timer, the TCM begins using the `primary` source again ❼.

NOTE

If the `primary` source fails while the TCM is in the Revert state, the revertive timer is cancelled and the system continues to use the `secondary` source.

1.2.2.1.2 BITS Mode

Figure 1.4 illustrates the operation of the BITS mode.

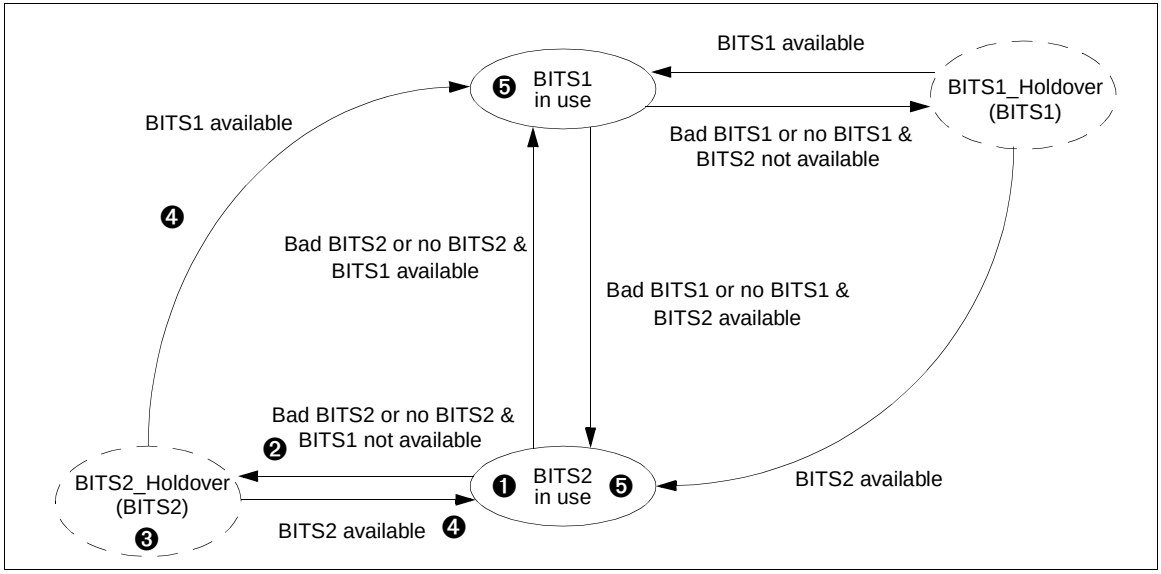

Figure 1.4 - BITS Timing Mode Operation

BITS1 is the BITS input for the TCM in slot X. BITS2 is the BITS input for the TCM in slot Y. During normal operation, both inputs should be valid clock sources, and the TCM will have a current clock of either BITS1 or BITS2 (selected by the master TCM).

For example, BITS mode is selected, both BITS inputs are valid, and the TCM selects BITS2 as the current reference clock (TCM current clock is BITS2) ❶. After some amount of time, BITS2 fails, due to an LOS or AIS alarm (no clock) ❷. BITS2 is shown as not available, and the TCM goes into the internal BITS2_Holdover state ❸. The PLL goes into holdover at this point, and the holdover value is transmitted on all of the ATM port output clocks. The BITS outputs on the CEC-Plus show AIS as soon as the BITS failure is seen.

The TCM remains in the internal Holdover state until either BITS1 or BITS2 becomes valid ❹. At that time, the PLL acquires, locks to the good reference, the AIS on BITS outputs is cleared, and the TCM begins using the valid reference (either BITS1 or BITS2 `in use` states) ❺.

Assume BITS1 is valid and the TCM is locked to the BITS1 source. After some amount of time, the BITS1 input fails due to a RefQual failure (clock has drifted out of specification). Assume there is still no clock seen on BITS 2 (e.g., AIS); in this situation, the TCM enters internal BITS1_Holdover state.

The PLL enters holdover (or freerun) and you still see BITS1 as the current state, but the holdover value (or freerun, depending if a valid holdover value can be obtained by the PLL) is transmitted on all of the ATM port output clocks. The BITS outputs on the CEC-Plus generates AIS as soon as the BITS input failure is seen by the TCM software.

The TCM then attempts to re-acquire lock to the BITS1 input. However, for it to lock successfully, the user must manually clear the RefQual failure from the BITS1 source using the **`conf timing refqual`** command.

Once the failure is cleared, the BITS1 input becomes valid, at which time that input is used by the TCM (and the AIS on BITS outputs is cleared).

The BITS automatic mode differs from the fabric automatic mode in the following ways:

- BITS mode uses `0` for the `failover switching timer`.
- BITS mode uses `enabled` for the `revertive switching`.
- BITS mode uses `0` for the `revertive switching delay`.
- BITS mode does not allow you to select a primary and secondary BITS source.

NOTE While in BITS mode, changing the above settings has no effect.

With the above exceptions, the BITS mode functions the same as the network module `automatic` mode (described earlier).

1.2.2.2 Manual Modes

The manual timing modes are mainly provided for diagnostic and maintenance purposes and would not typically be used during normal operation. The manual modes are:

- FreeRun - instructs the TCM to generate the clock from its internal circuitry.
- Primary - forces the TCM to use the currently configured network module primary source.
- Secondary - forces the TCM to use the currently configured network module secondary source.

1.3 Timing Configuration Guidelines

It is critical that the CEC-Plus be configured properly to take advantage of its timing recovery and distribution capabilities. It is equally important that timing be configured properly on the switch fabrics so that the SCPs and the CEC-Plus can share timing information effectively.

This section provides an overview of how to configure timing on the CEC-Plus and on the switch fabrics such that timing recovery and distribution can function properly. BITS mode configuration and Automatic mode configuration are covered, along with examples for each case. First, however, a brief discussion of proper IP configuration is given to ensure that the CEC-Plus and the switch fabrics can communicate effectively.

1.3.1 IP Connectivity between TCMs and SCPs

The active TCM in the CEC-Plus communicates with each of the active switch fabric SCPs via the backplane Ethernet. Proper timing control is possible only if the TCMs and SCPs are configured to communicate properly via the backplane. To enable this communication, the following should be performed:

- Assign IP addresses to each Ethernet interface (ie0 and ie1) on the TCMs and an IP address to the ie0 interface of each SCP (or SCP pair if the fabrics are configured with redundant SCPs). Thus, for a fully populated switch with redundant TCMs and SCPs, a total of 8 IP addresses must be assigned (one for each switch fabric and two for each TCM). Note that redundant SCPs require only one IP address for the pair, not one for each SCP. However, two IP addresses must be assigned to each TCM.
- After assigning IP addresses, administer each interface to `up` using the **`conf ip admin`** *`<interface>`* **`up`** command (where interface = ie0 and ie1 on the TCMs and ie0 on the SCPs).
- Ensure that the IP addresses of all of the switch's Ethernet interfaces are in the same IP subnet, and use the same subnet mask. Refer to Section 3.3 for details about configuring the IP addresses on the TCMs.

CAUTION

If a CEC-Plus is installed in a switch, NEVER use the front panel Ethernet connection on the SCPs. If the front panel connection is used, the SCP's connection to the backplane Ethernet connection is disabled, and timing control to/from the TCM is cut off.

NOTE

The Ethernet port is not designed to forward IP traffic that is destined for an IP address that is external to the switch. The Ethernet port on the CEC-Plus is intended to be used only for out-of-band management of TCMs and SCPs within the switch. Therefore, you cannot configure the switch as an IP router.

1.3.2 Timing Configuration

When running FT 5.1 software or later on a switch configured with a CEC-Plus, timing is configured using the **`switchclock`** command. While using TCM mode timing, this command lets you configure timing with only two configuration commands.

The figure below depicts how timing is recovered and distributed by the TCM.

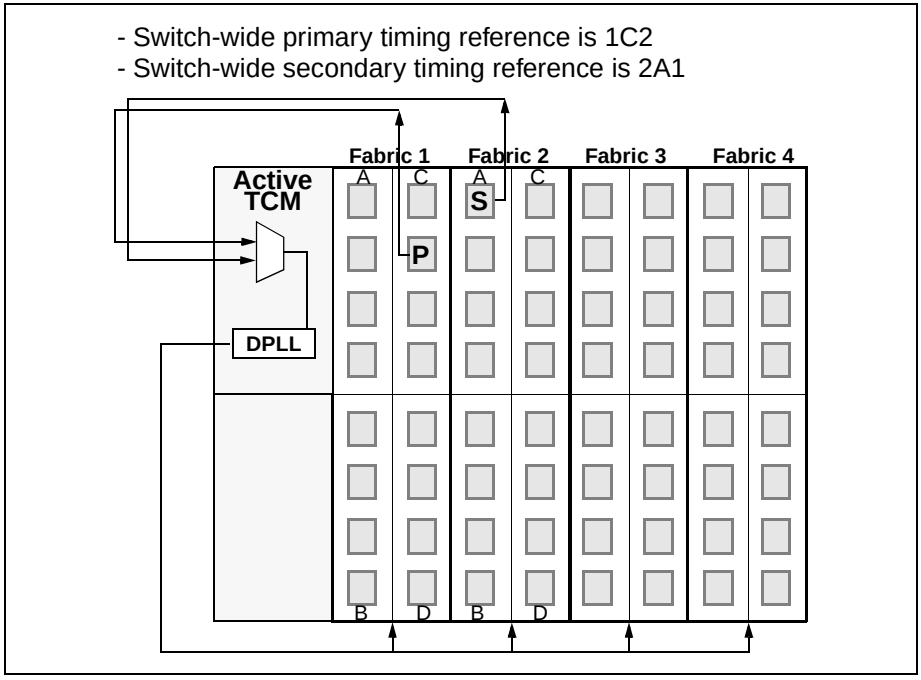

Figure 1.5 - Demonstration of Timing Recovery and Distribution

1.3.2.1 Automatic Mode Operation

Automatic mode (network module recovered) timing can be activated from either EMI (on the TCM) or AMI (on an SCP in the switch). Before selecting automatic mode, a valid primary and secondary timing reference must be configured on the switch.

1.3.2.1.1 Operational Notes for Automatic Mode Configuration

The following should be noted when using Automatic mode timing:

- The TCM's freerun oscillator cannot be selected as a primary or secondary source. The TCM's oscillator can only be selected via freerun mode.
- Revertive delay can be specified when revertive mode is selected. This prevents reverting to the primary source (if it becomes valid again) until the specified revertive delay interval has elapsed.
- Failover delay can be selected to prevent switching references until the specified failover delay interval has elapsed.
- To check on the status of a given timing reference (the eight fabric clocks, as well as the BITS clocks), the user should enter the following command:

  `configuration timing ref`

  A listing of all timing references is given, along with the status of each reference, including both BITS inputs.
- To check the status of the TCM, enter

  `configuration timing show`

  This command gives the current status of the TCM, and indicates if BITS mode is selected or if the TCM is in some other timing mode (e.g., automatic, freerun, holdover).
- All EMI commands for managing the CEC-Plus are also accessible from AMI under the **`configuration cec`**> submenu.

1.3.2.1.2 Fabric Timing Configuration

To configure timing with FT 5.1 or later, timing must first be established on each of the switch fabrics. From an AMI session on each fabric, use the **switchclock** command to export the fabric's primary and secondary clocks, and the **mode tcm** command to import timing from the CEC-Plus. The commands are shown below:

```
configuration timing> switchclock (primary | secondary) (<bnp> | none)
configuration timing> mode tcm
```

When using TCM mode, the **switchclock** command specifies which clock references can be used by the TCM as switch-wide primary and secondary references. The *<bnp>* notation indicates the board, network module, and port (e.g., 3A1). Therefore, switchclock and TCM mode allow two ports on each fabric to be used by the CEC-Plus for timing distribution in Automatic mode.

For example, in a four-fabric switch, to configure port 1 on network modules A and B as candidates for switch-wide primary and secondary timing references, issue the following commands:

(From an AMI session on fabric 1):

```
configuration timing> switchclock primary 1A1
configuration timing> switchclock secondary 1B1
configuration timing> mode tcm
```

(From an AMI session on fabric 2):

```
configuration timing> switchclock primary 2A1
configuration timing> switchclock secondary 2B1
configuration timing> mode tcm
```

(From an AMI session on fabric 3):

```
configuration timing> switchclock primary 3A1
configuration timing> switchclock secondary 3B1
configuration timing> mode tcm
```

(From an AMI session on fabric 4):

```
configuration timing> switchclock primary 4A1
configuration timing> switchclock secondary 4B1
configuration timing> mode tcm
```

When **mode tcm** is entered, the CEC-Plus's output is automatically imported by all of the fabrics. If **mode switch** is entered, the CEC-Plus's output is not used, and the fabrics import/export clocks directly from one another.

1.3.2.1.3 TCM Timing Configuration

After the candidate references have been configured on the switch fabrics, switch-wide primary and secondary timing references must be configured on the TCM.

The EMI commands on the TCM are as follows:

```
configuration timing> primary fabric (1 | 2 | 3 | 4) (primary | secondary)
configuration timing> secondary fabric (1 | 2 | 3 | 4) (primary | secondary)
```

For example, ports 1A1, 1B1, 2A1, 2B1, etc., have been exported with **`switchclock`**, as in the example above, and each fabric is running in TCM mode. To specify 1A1 as the primary timing reference and 3B1 as the secondary timing reference for the switch, enter the following commands from EMI:

```
configuration timing> primary fabric 1 primary
configuration timing> secondary fabric 3 secondary
configuration timing> mode automatic
```

The switch uses fabric 1's primary exported reference (1A1) under normal operation. Upon failure of that reference, the switch automatically failsover to fabric 3's exported secondary reference (3B1).

1.3.2.2 BITS Mode Operation

In BITS mode, the BITS clock is distributed to each of the fabrics (if each fabric is in TCM mode). If primary and secondary sources are specified, and BITS mode is selected on the TCM, the primary and secondary sources will be ignored.

1.3.2.2.1 Operational Notes for BITS Mode Configuration

The following should be noted when using BITS mode timing:

- If no BITS clocks are available, then BITS mode cannot be selected.
- Revertive operation is not possible in BITS mode.
- BITS1 refers to the BITS input on the TCM in slot X (TCM X), and BITS2 refers to the BITS input on the TCM in slot Y (TCM Y).
- To check on the status of a given timing reference, enter the following command:

  `configuration timing ref`

  All references and their status are listed, including both BITS inputs.
- To check the status of the TCM, enter the following command:

  `configuration timing show`

  The current TCM status is listed, including the TCM's current timing mode (e.g., BITS, automatic, freerun, holdover).
- All EMI commands for managing the CEC-Plus are also accessible from AMI under the `configuration cec>` submenu.

1.3.2.2.2 Fabric Timing Configuration

The following commands, issued on each fabric, can be used to configure BITS timing:

```
configuration timing> switchclock primary none
configuration timing> switchclock secondary none
configuration timing> mode tcm
```

1.3.2.2.3 TCM Timing Configuration

Finally, from EMI on the TCM, enter the following command to configure BITS timing:

```
configuration timing> mode bits
```

1.4 CEC-Plus Hardware

The CEC-Plus subsystem resides in the far left slot of an ASX-1000, TNX-1100, or MSC-900 chassis (the slot to the left of switch board #1). Dual TCM assemblies are available, providing fully redundant environmental and timing management features.

1.4.1 Card Carrier Hardware

The base of the CEC-Plus assembly is the card carrier (see Figure 1.6), which divides the CEC slot into two and secures the TCM in the switch. Each of the two halves of the slot can accept a TCM assembly.

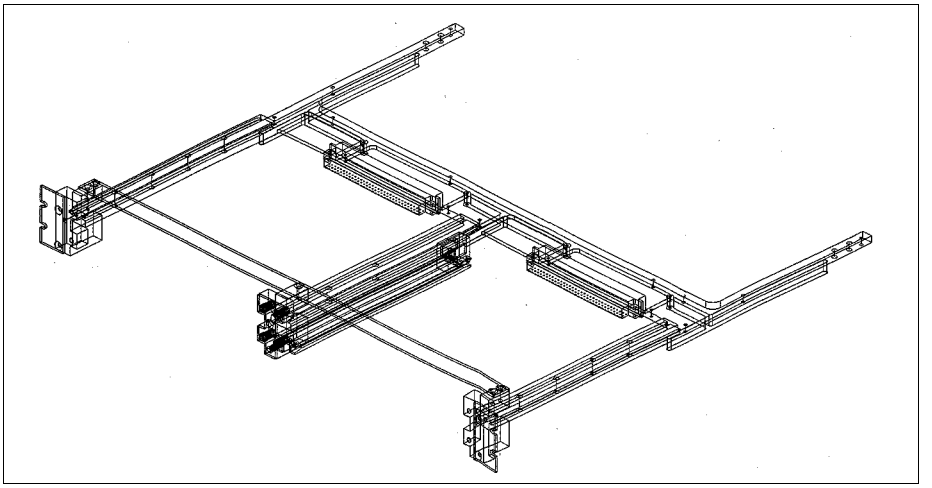

Figure 1.6 - CEC-Plus Card Carrier

1.4.2 TCM Hardware

The standard CEC-Plus configuration for the TNX-1100 is a card carrier and dual TCMs. The ASX-1000 and the MSC-900 can be optionally configured with one or two TCMs per CEC-Plus. The front-panel features of the TCM are detailed in the following subsections (also, see Figure 1.7).

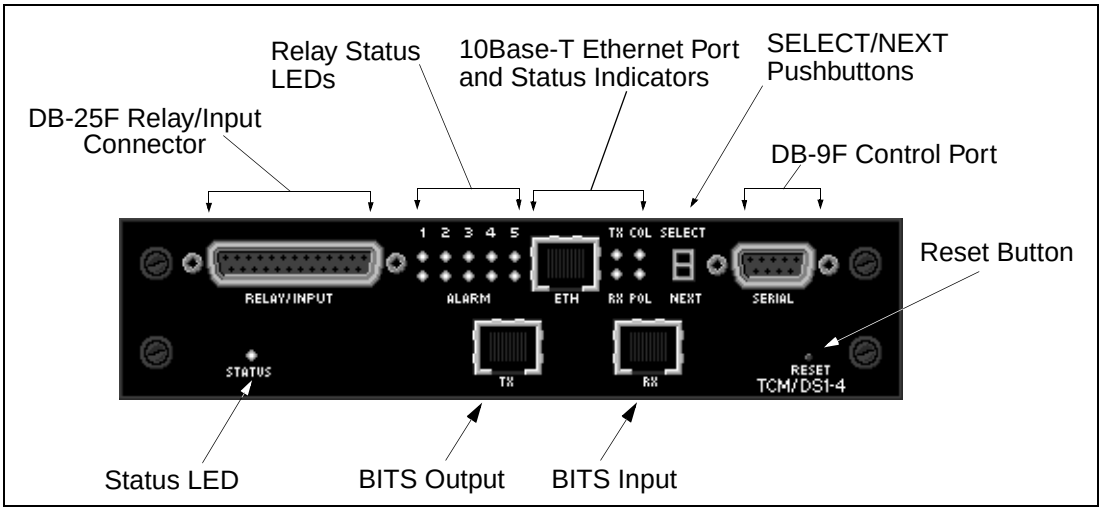

Figure 1.7 - TCM Hardware Features

1.4.2.1 DB-25F Relay/Input Connector

The DB-25F relay/input connector provides five alarm relay contacts and five digital input connections. Each alarm is associated with three pin contacts, and each digital input is associated with two pin contacts.

The alarm relay contacts can be used to connect an external alarm (e.g., a warning light or horn) to the switch. In this way, notification of an alarm condition is not limited to AMI, EMI, or front panel LEDs. By default, all five alarms are active (contacts closed) when NOT receiving power (see Figure 1.8 and Table 1.1 for more information).

The digital inputs can be used to monitor activity around the switch or the closet in which the switch resides (e.g., a “door open” event).

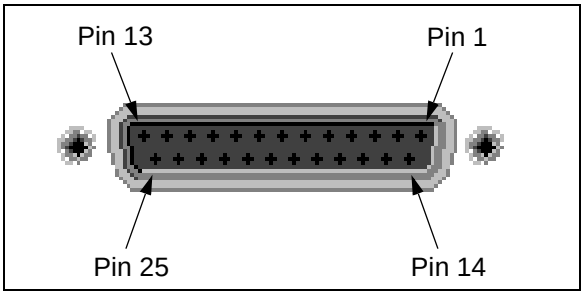

Figure 1.8 - DB-25F Pin Locations

Table 1.1 - DB-25F Pinouts

Pin	Usage	Pin	Usage
1	COM1	14	NO4
2	COM2	15	NO5
3	COM3	16	EI1
4	COM4	17	EI2
5	COM5	18	EI3
6	NC1	19	EI4
7	NC2	20	EI5
8	NC3	21	EIGND
9	NC4	22	EIGND
10	NC5	23	EIGND
11	NO1	24	EIGND
12	NO2	25	EIGND
13	NO3		
* COM = Relay commutator; NC = Normally closed contact; NO = Normally open contact; EI = Digital input; EIGND = Return path			

1.4.2.2 Relay Status LEDs

The relay status LEDs indicate the presence of alarm conditions on the switch. There are two LEDs (one green and one amber) for each alarm, and each LED is associated with a set of three alarm relay contacts on the DB-25F relay/input connector (for connecting external alarms). The green LED is illuminated when no alarms are present, the amber LED is illuminated during an alarm condition.

By default, LED set #1 is the major alarm indicator for fan failure, an over temperature condition, or a power supply failure. LED set #2 is the minor alarm indicator for SPANS failure and for link failure. Sets #3 through #5 are undefined. These configurations can be changed through the use of the Extended Management Interface (EMI). For more information, please refer to Section 3.1 in Chapter 3 of this manual.

1.4.2.3 10Base-T Ethernet Port

The 10Base-T Ethernet port located on the TCM has a standard RJ-45 female connector and is designed to provide a single, unified Ethernet connection to the chassis. IP traffic is bridged to the internal Ethernet segment, eliminating the need to attach each SCP individually. This Ethernet port has four LEDs which indicate its current status as shown in Figure 1.9. These LEDs are described in Table 1.2 through Table 1.5.

NOTE

When configured with a CEC-Plus, a switch's individual SCP Ethernet ports cannot be used. Usage of an SCP's Ethernet port will disable timing operation for that SCP.

For more information about configuring the TCM's Ethernet interface, see Chapter 3 of this manual.

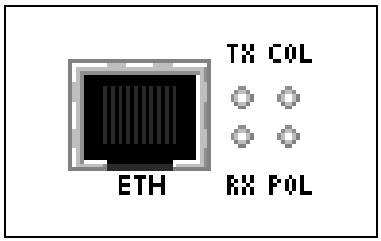

Figure 1.9 - TCM Ethernet Port and LEDs

Table 1.2 - TCM Transmit (TX) LED Description

LED Color	Meaning
green (solid)	The status of the twisted pair cable connected to the TCM Ethernet port is OK.
green (flashing)	The TCM is transmitting traffic.
off	The Ethernet port is NOT receiving link integrity pulses. Check the integrity of the connection.

Table 1.3 - TCM Receive (RX) LED Description

LED Color	Meaning
green	The Ethernet port is receiving traffic normally.
off	The Ethernet port is NOT receiving traffic.

Table 1.4 - TCM Collision (COL) LED Description

LED Color	Meaning
amber	An Ethernet collision has been detected on the TCM Ethernet port.
off	No Ethernet collisions have been detected.

Table 1.5 - TCM Polarity (POL) LED Description

LED Color	Meaning
amber	A reverse polarity condition has been detected on the twisted pair cable connected to the TCM Ethernet port. The polarity is automatically corrected, but the amber light will remain illuminated until a corrected twisted pair cable is inserted into the Ethernet port.
off	The polarity of the twisted pair cable connected to the TCM Ethernet port is OK.

1.4.2.4 SELECT/NEXT Pushbuttons

Currently, the SELECT and NEXT pushbuttons are only used by the diagnostic software, which is not available to the user.

1.4.2.5 DB-9F Control Port Connector

The DB-9F control port is an RS-232 serial port that provides terminal access for any VT100 (or similar) terminal or terminal emulation package to the CEC-Plus. The TCM's control port supports tty connections to allow remote access and management via a modem. For more information about configuring the control port, see Section 3.3 in Chapter 3 of this manual.

The control port's standard DB-9 female connector has pin locations as shown in Figure 1.10.

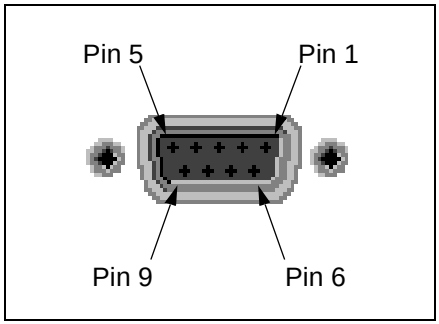

Figure 1.10 - DB-9F Control Port Pin Locations

Table 1.6 describes the DB-9F control port pinouts that are illustrated in Figure 1.10.

Table 1.6 - DB-9F Control Port Pinouts

Pin Number	Signal Mnemonic	Signal Name
1	DCD	Data Carrier Detect
2	RXD	Receive Data
3	TXD	Transmit Data
4	DTR	Data Terminal Ready
5	GND	Signal Ground
6	DSR	Data Set Ready
7	RTS	Request to Send
8	CTS	Clear to Send
9		Not Used

1.4.2.6 Status LED

The status LED located in the lower-left corner of the TCM front panel reflects the current operational state to the TCM. Table 1.7 lists the states of the status LED and their meanings.

Table 1.7 - Status LED Description

LED Color	Meaning
red	The TCM has power, but has failed. (The CEC-Plus, not the entire switch, has failed self-diagnostics or has experienced an operational failure.)
green (solid)	The TCM has power and is working properly as master.
green (flashing)	The TCM has power and is working properly as standby.
amber (solid)	When in automatic or BITS mode, one of the two input clock sources is invalid, but not both.
amber (flashing)	The TCM has no valid input clock sources.
off	The TCM has not booted.

NOTE

The standby TCM's status LED always flashes green (when the TCM is functional). Solid green, solid amber, and flashing amber are active TCM status indicators.

NOTE

When using a dual TCM configuration, the TCMs should be the same version (both DS1 or both E1) and the same timing level (both Stratum 3 or both Stratum 4). If they are mixed, the status LED on the standby TCM goes red as soon as the TCM is installed, and the TCM is inactive. It will not function in this configuration.

1.4.2.7 BITS Clock Input and Output Ports

The TCM can be configured to derive timing from an external Building Integrated Timing Source (BITS) clock. The TCM is available in DS1 (1544 Kbps) or E1 (2048 Kbps).

When configured for BITS timing, the timing source derived by the TCM is a BITS clock which is fed via the RJ-48C Receive (Rx) port. The same signal can then be passed to another TCM from the RJ-48C Transmit (Tx) port (see Figure 1.11). For more information about configuring timing, see Section 3.7 in Chapter 3 of this manual.

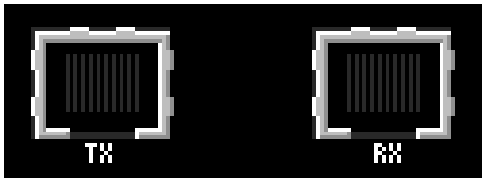

Figure 1.11 - BITS Clock Input and Output Ports

NOTE

The Tx port sends out the currently selected timing source unless the TCM is in freerun or holdover (in which case, the output of the TCM's DPLL is used). When in freerun or holdover, or when the clock source is changed, the Tx port sends out an AIS because the TCM is not locked to the clock source at that point.

NOTE

The BITS Tx port from one TCM must never be connected to the BITS Rx port of a second (redundant) TCM in the same chassis. This results in a timing loop, producing undesirable behavior.

The pinouts for the RJ-48C Transmit (Tx) port are listed in Table 1.8. Shield lines are provided in case shielded cable is used.

Table 1.8 - RJ-48C Tx Port Pinouts

Pin Number	Signal Mnemonic	Signal Name
1		Not Used
2		Not Used
3		Not Used
4	TX+	Transmit Data +
5	TX-	Transmit Data -
6		Not Used
7		Not Used
8		Not Used

The pinouts for the RJ-48C Receive (Rx) port are listed in Table 1.9. Shield lines are provided in case shielded cable is used.

Table 1.9 - RJ-48C Rx Port Pinouts

Pin Number	Signal Mnemonic	Signal Name
1	RX+	Receive Data +
2	RX-	Receive Data -
3		Not Used
4		Not Used
5		Not Used
6		Not Used
7		Not Used
8		Not Used

1.4.2.8 Reset Button

The reset button lets the user reset the TCM. Pressing the reset button boots the TCM and runs the initial power-on diagnostics. All open EMI sessions are ended by the TCM. Because it is small (to avoid accidental resets), it is recommended that you use a straightened paper clip to push the reset button.

1.5 TCM Replacement

The following procedure explains how to remove a TCM and install a new one.

WARNING!

It is highly recommended that you use a grounding strap when handling this or any other component.

CAUTION

Do not attempt to remove or replace a TCM without first removing all connections to the TCM (i.e., serial, Ethernet, relay, or BITS clock connections).

1. Loosen the four captive fasteners on either edge of the TCM using a straight screwdriver.
2. Pull firmly and carefully on the four captive fasteners and slowly remove the TCM from the card carrier (as shown in Figure 1.12).

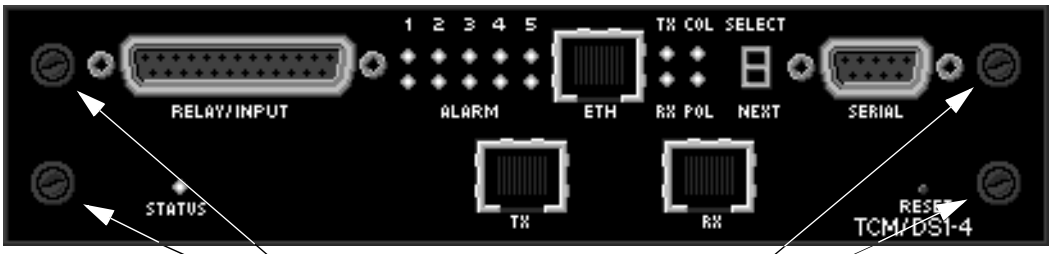

Figure 1.12 - Removal of the TCM

3. Set the old TCM aside.

4. Orient the new TCM the same way as the old one (right side of TCM, with DB-9F connector, toward the top of the switch chassis) and carefully align it in the vacant card carrier slot.
5. Insert the new TCM into the CEC-Plus card carrier by sliding it into the card guides.
6. Push firmly to seat the TCM so that its faceplate is flush with the front panel of the CEC-Plus card carrier.
7. Re-tighten the captive fasteners with a straight screwdriver to ensure the TCM is secure.

If the TCM being installed is the first one inserted in the chassis, it will boot as master. If the TCM being installed is the second TCM in the chassis, it will boot as standby.

WARNING!

Do not attempt to insert any card except the TCM (i.e., an SCP or a network module) into the TCM slot.

CHAPTER 2 EMI Overview

The user interface to the TCM is called the Extended Management Interface (EMI). EMI can be accessed either through a direct connection to the serial port on any TCM or through a telnet session to the front panel Ethernet on any TCM. This chapter contains a detailed description of how to log in to EMI, how to open or close an EMI session, and how to perform other EMI root level commands.

NOTE Many of the management capabilities of EMI are also available through AMI.

EMI allows you to configure and to make statistical queries of the TCM by providing a hierarchical menu system similar to a UNIX file system. A single root menu provides a number of commands. Some of those commands, in turn, call submenus which provide a number of subcommands. At any given time, you work within a particular submenu which is indicated by the prompt. You can traverse a submenu one level at a time, or can traverse a number of levels simultaneously if the entire command string is known. For example, to show the current configuration of the alarms, enter the following at the prompt:

```
localhost::> configuration alarms show
```

rather than entering one command line at a time as follows:

```
localhost::> configuration

localhost::configuration> alarms

localhost::configuration module> show
```

Additionally, you only need to enter the minimum number of letters in a command which would make the command unique to that level. For example, you could enter **co a s** instead of **configuration alarms show**.

EMI is described throughout this chapter using the following conventions:

- All EMI output, including user prompts, is shown in `courier` font.
- All user input; e.g., sub-commands, is shown in **`bold courier`** font.
- Each submenu is described in a separate section.
- Commands that are submenus are immediately followed by a “>” symbol. The “>” should not be entered as part of the command.
- Required parameter values are indicated inside angle brackets “< >”. The “< >” should not be entered as part of the command.
- Optional parameter values are indicated inside square brackets “[ ]”. The “[ ]” should not be entered as part of the command.
- Parameter values that require a choice are separated by vertical bars and are enclosed in parentheses “(|)” Neither the vertical bar nor the parentheses should be entered as part of the command.
- Optional parameter names are indicated with dashes “-”.
- All port numbers are in BNP (board, network module, port) notation.
- EMI commands are not case-sensitive.

2.1 Login from Serial Port or Telnet

You can log in to the TCM either via the serial port or via the Ethernet port using telnet.

NOTE

The initial login to EMI must be made via the serial port, as Ethernet access is not available until a TCM has been configured with an IP address.

2.1.1 Login from Serial Port

When connecting to the TCM via the serial port, output similar to the following is displayed on your console:

```
T_ForeThought_5.3.0  (cec-plus) (linus)
```

Above, `T_ForeThought_5.3.0` shows the software version, `(cec-plus)` shows that the device is a CEC-Plus, and `(linus)` indicates the name assigned to this TCM. If `(Unknown)` is shown for the TCM name, this means that no name has been assigned yet.

At the login prompt, if a password has been assigned to the TCM, you should type **emi <ENTER>.** At the password prompt, type the password. For security reasons, your keystrokes are not echoed.

```
login: emi
Password:
```

If no password has been assigned, enter **emi <ENTER>** at the login prompt. In either case, the following is displayed and a session is opened on the TCM:

```
Extended Management Interface v5.3.0
Copyright (c) 1997-1998 FORE Systems, Inc.
All Rights Reserved

General commands:
  '?' to get list of commands at the current level
  'up' to go up one menu level
  'top' to go to the root menu
  'exit' to leave EMI

Opening a session for "127.0.0.1", please wait...
Connected to "127.0.0.1" (cec-plus).
localhost::>
```

2.1.2 Login from Telnet

To telnet to a TCM, enter the following parameters at the > prompt on the host:

```
> telnet <address>
```

address Enter the IP address of the TCM.

For example, to telnet to a TCM with the IP address `198.29.35.26`, enter the following:

```
> telnet 198.29.35.26
```

When the telnet connection is established, something similar to the following is displayed:

```
host-user:51=> telnet 198.29.35.26
Trying 198.29.35.26 ...
Connected to 198.29.35.26.
Escape character is '^]'.
```

At the `login:` prompt, enter the command **`emi`** as follows:

```
T_ForeThought_5.3.0  (cec-plus) (linus)
login: emi
```

Above, `T_ForeThought_5.3.0` shows the software version, `(cec-plus)` shows that the device is a CEC-Plus, and `(linus)` indicates the name assigned to this TCM. If `(Unknown)` is shown for the TCM name, this means that no name has been assigned yet.

Only one user may open an EMI session on an TCM at a time. When you are prompted to log in, enter **`emi`** as follows:

```
login: emi
```

If a password has been assigned, then you are prompted for that password. The keystrokes of the password are not echoed for security reasons. If no password has been assigned (e.g., the very first time you log in), then you are not prompted for a password. For more information about how to assign or to change the login password, refer to Section 4.5.4 in Chapter 4 of this manual.

```
login: emi
Password:
```

The following is displayed and a session is opened on the TCM:

```
Extended Management Interface v5.3.0
Copyright (c) 1997-1998 FORE Systems, Inc.
All Rights Reserved

General commands:
  '?' to get list of commands at the current level
  'up' to go up one menu level
  'top' to go to the root menu
  'exit' to leave EMI

Opening a session for "127.0.0.1", please wait...

Connected to "127.0.0.1" (cec-plus).

localhost::>
```

If another user already has an EMI session open on that TCM, then you are not permitted to log in and you receive the following message:

```
host-user:51=> telnet 169.144.28.125
Trying 169.144.28.125 ...
Connected to 169.144.28.125.
Escape character is '^]'.

Sorry, this system is engaged.
Connection closed by foreign host.
host-user:52=>
```

2.2 EMI Root Menu for an Open Session

When EMI is first entered from the serial port or telnet, the localhost session is the only open session. The following information is displayed:

```
Extended Management Interface v5.3.0
Copyright (c) 1997-1998 FORE Systems, Inc.
All Rights Reserved

General commands:
  '?' to get list of commands at the current level
  'up' to go up one menu level
  'top' to go to the root menu
  'exit' to leave EMI

Opening a session for "127.0.0.1", please wait...

Connected to "127.0.0.1" (cec-plus).

localhost::>
```

By typing a "**?**" at any prompt, a list of available commands at the current level is displayed. By typing a "**?**" at this root level prompt, the following command list is shown:

```
localhost::> ?
  about            close            configuration>   exit
  help             history          open             operation>
  ping             redo             rows             statistics>
  top              up
```

This menu is the root submenu for an EMI session. Each of these root level commands is described in the following subsections.

2.2.1 About Command

By entering the **about** command at the root level prompt, you can display information regarding EMI and how to begin an EMI session on an TCM.

```
localhost::> about
Extended Management Interface v5.3.0
Copyright (c) 1997-1998 FORE Systems, Inc.
All Rights Reserved

  EMI uses SNMP to manage FORE Systems' Common Equipment
  Card's (CEC) Timing Control Modules (TCM).
  EMI is platform independent and runs on hosts and FORE
  Systems' Timing Control Modules.
  When EMI is executed on a host, you must first use the OPEN
  command to specify the TCM to manage.  If EMI is started
  on a TCM, it immediately opens a connection to itself.
```

2.2.2 Close Command

Any number of sessions may be opened to remote TCMs from your local TCM (see Section 2.2.7). However, only one EMI session may be open at a time on any given TCM.

By typing **close** at the prompt, you end the current EMI session. If an individual session is closed, you are sent back to the last session that is still open. For example, if you opened a session on a TCM with an IP address of 169.122.12.34 and then another session on an TCM with an IP address of 169.122.12.18 from your local TCM, and you wanted to close the remote session, you would be sent back to the last open session (169.122.12.34) as follows:

```
169.122.12.18::> close
169.122.12.34::>
```

If you decided to close the session on 169.122.12.34, you would be sent back to the last open session which is on your local TCM as follows:

```
169.122.12.34::> close
localhost::>
```

If all sessions are closed, you are sent back to the root prompt as follows:

```
localhost::> close
>
```

At this point, you can open another session or exit.

2.2.3 Configuration Commands

By entering **`configuration`** at the root level, you can access several subcommands that allow you to configure specific parts of the TCM. The **`configuration`** commands are described in detail in Chapter 3 of this manual.

2.2.4 Exit Command

The **`exit`** command lets you log out of the main EMI system. When entered, this command ends all open sessions on the TCM. Enter the following:

```
localhost::> exit
Connection closed by foreign host.
```

2.2.5 Help Command

By typing **help** at any submenu level, a list of available commands at the current level, and a short description of each command, is shown. By typing **help** at the root level, the following commands and descriptions are shown:

```
localhost::> help

General commands:
  '?' to get list of commands at the current level
  'up' to go up one menu level
  'top' to go to the root menu
  'exit' to leave EMI

  about                  - Display program information
  close                  - Close this connection
  configuration>         - System configuration submenu
  exit                   - Exit EMI
  help                   - Display help for each command
  history                - Display command history
  open                   - Open a connection
  operation>             - System operation submenu
  ping                   - Ping a host or TCM
  redo                   - Repeat a history command
  rows                   - Get/set number of rows
  statistics>            - System statistics submenu
  top                    - Go to the root menu
  up                     - Go up 1 menu level
```

2.2.6 History Command

By typing **history** at any prompt, you can list up to the last 20 previously typed commands for that particular session as follows:

```
localhost::> history
   130  sh
   131  revertive disable
   132  rev
   133  ?
   134  en
   135  sh
   136  up
   137  sh
continues...
```

2.2.7 Open Command

The **open** command lets you begin a session on a remote TCM. At the prompt, enter the following parameters:

```
localhost::> open <tcm> [<community>]
```

tcm Indicates the IP address of the remote TCM on which you want to open a session.

community Enter the SNMP community string that indicates the level of access that you have on the TCM. The default is `public`, which allows read-only access.

NOTE Although the default SNMP community string is `public`, you must use the `private` SNMP community string if you wish to make any changes on the remote TCM.

NOTE The **open** command can only initiate a session on another TCM. It can not open a session to an SCP.

For example, to log in to a remote TCM that has an IP address of 192.25.6.113 using the `private` community string, enter the following parameters:

```
localhost:> open 192.25.6.113 private
Opening a session for “192.25.6.113”, please wait...
Connected to “192.25.6.113” (cec-plus).
192.25.6.113::>
```

If the remote TCM to which you are connecting is running a different software version than the local TCM, you receive the following caution:

```
localhost::> open 192.25.6.128
Opening a session for “192.25.6.128”, please wait...
Connected to “192.25.6.128” (cec-plus).
Host 192.25.6.128 running a different version. There may be some
incompatibilities.
```

2.2.8 Operation Commands

By entering **`operation`** at the root level prompt, you can access several subcommands that let you manage various parts of the TCM and the switch. The **`operation`** commands are described in detail in Chapter 4 of this manual.

2.2.9 Ping Command

The **`ping`** command lets you send a ping to another TCM, to a switch, or to a host to see if it is “alive,” or reachable, by sending it an ICMP echo request and waiting for a response. You can access this command by entering **`ping`** at the root level. Enter the following parameters:

```
localhost::> ping <IP-address>
```

IP-address Indicates the IP address of the TCM, switch, or host to which the ping is sent.

NOTE The ping is always sent from the first TCM, switch, or host on which the EMI session was originally started. For example, you are logged into TCM A. From there, you open a session to TCM B. If you enter the **`ping`** command while in your session on TCM B, the ping is sent from TCM A, NOT from TCM B.

2.2.10 Redo Command

The **redo** command can be used in conjunction with the **history** command. It lets you repeat a command that was given in the same EMI session. You can access this command by entering **redo** at any level. To repeat the last command that was performed, enter **redo** with no additional parameters as follows:

```
localhost::> redo
```

To repeat a command given within the last 20 commands in the same open session, enter the following parameters:

```
localhost::> redo <command-number>
```

command-number Indicates the command and the number associated with that command which was previously performed by the TCM during this same EMI session. You should enter the **history** command to list the previous commands and their associated numbers as shown in the following example.

Type **history** at the prompt to list the last 20 previously typed commands for that particular session.

```
localhost::> history
   136  up
   137  sh
   138  revertive disable
   139  sh
continues...
```

Then, to repeat a previously given command, type **redo** and the command number at the prompt. For example, to repeat command number 138, which is **revertive disable**, enter the following:

```
localhost::> redo 138
```

2.2.11 Rows Command

The **rows** command allows users to display or set the number of rows that their terminal displays. Users can access this command by entering **rows**, followed by the number of rows to be displayed, at the root level as follows:

```
localhost::> rows [<rows>]
```

rows Indicates the number of terminal rows to be used.

To display the number of rows that is displayed, enter the command as follows:

```
localhost::> rows
Terminal Rows = 24
```

2.2.12 Statistics Commands

By entering **statistics** at the root level, you can access commands that display operational performance and error information for the various TCM interfaces. The **statistics** commands are described in Chapter 5 of this manual.

2.2.13 Top Command

By entering **top** at any level, you are sent to the root level of EMI. For example, if you are at the **operation cdb** level and you want to go directly to the root level, simply enter **top** at the prompt as follows:

```
localhost::operation cdb> top

localhost::>
```

2.2.14 Up Command

Entering **up** allows you to go up one menu level. For example, if you are at the **configuration snmp trap** level and you want to go one level above that to **configuration snmp**, simply enter **up** at the prompt as shown here.

```
localhost::configuration snmp trap> up

localhost::configuration snmp>
```

Entering the characters **..** has the same effect as entering the command **up**. For example,

```
localhost::configuration snmp trap> ..

localhost::configuration snmp>
```

CHAPTER 3 EMI Configuration Commands

This chapter contains a detailed description of the EMI **configuration** commands. The main **configuration** menu can be found at the root level. There are several commands available under **configuration**. Commands that are submenus are immediately followed by a “>” symbol. Type **configuration ?** at the prompt at the root level to display the **configuration** commands as follows:

```
localhost::configuration> ?
  alarms>          ip>              rs232>           snmp>
  system>          tcm>             timing>
```

Each of these commands has a submenu of commands which are described in the following subsections.

3.1 Alarms Configuration Commands

This submenu lets you configure alarm conditions that are a result of various environmental and synchronization timing conditions. You can display the list of available subcommands by typing **alarms ?** at the **configuration** level.

```
localhost::configuration> alarms ?
  show            enable          disable         relays>
  reset
```

3.1.1 Displaying Alarm Conditions

This command lets you display the status of all alarms. Enter the following:

```
localhost::configuration alarms> show
 AlarmType                      AlarmStatus    MinorAlarm   MajorAlarm
 powerSupplyInputFailed         active         disabled     enabled
 powerSupplyOutputFailed        active         disabled     enabled
 fanBankFailed                  active         disabled     enabled
 tempSensorOverTemp             inactive       disabled     enabled
 powerSupplyOverCurrent         inactive       disabled     enabled
 powerSupply5VoltFailed         inactive       disabled     enabled
 Major alarm relay status: on
 Minor alarm relay status: off
```

The fields in this display have the following meanings:

AlarmType Displays the name of the alarm.

AlarmStatus Shows whether the state of the alarm is active (alarming) or inactive (not alarming). An alarm is active if the underlying condition is detected. For power supplies, the input failed alarm condition is active if the input voltage is not within the nominal range for the supply. This does not necessarily mean that an output failure will result. A power supply output failure condition is active if any power supply is failing or if it is physically removed.

MinorAlarm `Disabled` means that this alarm type will not cause a minor alarm. `Enabled` means that this alarm type causes a minor alarm.

MajorAlarm `Disabled` means that this alarm type will not cause a major alarm. `Enabled` means that this alarm type causes a major alarm.

Major alarm relay status `Off` means that no major alarms are currently active on the TCM or on any of the SCPs. `On` means that one or more major alarms are currently active. Look at the AlarmStatus field to see which condition is in a state of alarm. If none of the alarms are enabled, then the alarm condition exists on one of the switch's SCPs (indicating either a link failure or SPANS failure).

Minor alarm relay status `Off` means that no minor alarms are currently active on the TCM or on any of the SCPs. `On` means that one or more minor alarms are currently active. Look at the AlarmStatus field to see which condition is in a state of alarm. If none of the alarms are enabled, then the alarm condition exists on one of the switch's SCPs (indicating either a link failure or SPANS failure).

3.1.2 Enabling an Alarm

This command lets you enable an alarm. Enter the following parameters:

```
localhost::configuration alarms> enable (major | minor) <alarm type>
```

major|minor Designates whether the alarm type causes a major alarm or a minor alarm when that condition occurs.

alarm type Indicates the kind of alarm condition. Valid parameters are displayed in the `AlarmType` field when the command string **`configuration alarms show`** is entered at the prompt.

For example, to enable an overtemperature condition that is detected by the overtemperature sensor as a major alarm, enter the following parameters:

```
localhost::configuration alarms> enable major tempSensorOverTemp
```

To verify that the change has taken effect, you can display the alarms:

```
localhost::configuration alarms> show
 AlarmType                      AlarmStatus    MinorAlarm   MajorAlarm
 powerSupplyInputFailed         active         disabled     enabled
 powerSupplyOutputFailed        active         disabled     enabled
 fanBankFailed                  active         disabled     enabled
 tempSensorOverTemp             inactive       disabled     enabled
 powerSupplyOverCurrent         inactive       disabled     enabled
 powerSupply5VoltFailed         inactive       disabled     enabled
 Major alarm relay status: on
 Minor alarm relay status: off
```

3.1.3 Disabling an Alarm

This command lets you disable an alarm. Enter the following parameters:

```
localhost::configuration alarms> disable (major | minor) <alarm type>
```

major|minor Designates whether the alarm type causes a major alarm or a minor alarm when that condition occurs.

alarm type Indicates the alarm condition. Valid parameters are displayed in the `AlarmType` field when the command string **`conf alarms show`** is entered.

For example, to disable an overtemperature condition that is detected by the overtemperature sensor as a major alarm, enter the following parameters:

```
localhost::configuration alarms> disable major tempSensorOverTemp
```

To verify that the change has taken effect, you can display the alarms:

```
localhost::configuration alarms> show
 AlarmType                      AlarmStatus    MinorAlarm   MajorAlarm
 powerSupplyInputFailed         active         disabled     enabled
 powerSupplyOutputFailed        active         disabled     enabled
 fanBankFailed                  active         disabled     enabled
 tempSensorOverTemp             inactive       disabled     disabled
 powerSupplyOverCurrent         inactive       disabled     enabled
 powerSupply5VoltFailed         inactive       disabled     enabled
 Major alarm relay status: on
 Minor alarm relay status: off
```

3.1.4 Configuring an Alarm Relay

These commands let you configure or display alarm relays. You can show the list of available subcommands by typing **relays ?** at the **alarms** level. Enter the following parameters:

```
localhost::configuration alarms> relays ?
  set              show
```

3.1.4.1 Setting an Alarm Relay

This command lets you set an alarm relay. Enter the following parameters:

```
localhost::conf alarms relays> set <relay number> (major | minor | unused)
```

relay number Indicates the number which corresponds to one of the five alarm relay LEDs on the front of the SCP.

major|minor |unused Indicates if you want the alarm relay to be major, minor, or unused.

3.1.4.2 Displaying the Alarm Relays

This command lets you display the alarm relays. Enter the following parameters:

```
localhost::conf alarms relays> show
 Relay           Alarm          Current
 Number         Function         State
    1            major            on
    2            minor            on
    3            unused           off
    4            unused           off
    5            major            on
```

Relay Number Shows the number which corresponds to one of the five alarm relay LEDs on the front of the SCP.

Alarm Function Shows whether the alarm relay has been configured as major, minor, or unused.

Current State Shows whether the alarm relay is on (in a state of alarm) or off (not in a state of alarm).

3.1.5 Resetting an Alarm

NOTE Currently, issuing this command has no effect.

```
localhost::configuration alarms> reset (<alarm type> | all)
```

3.2 IP Configuration Commands

NOTE

The `ie1` interface (backplane Ethernet) of all installed TCMs and the `ie0` interface (front panel Ethernet) of all installed SCPs must all reside on the same subnet, and the subnet mask address must be the same (depending on the class of the subnet).

NOTE

The Ethernet port is not designed to forward IP traffic that is destined for an IP address that is external to the switch. The Ethernet port on the CEC-Plus is intended to be used only for out-of-band management of TCMs and SCPs within the switch. Therefore, you cannot configure the switch as an IP router.

These commands let you change the IP configuration of the TCM's interfaces. You can display the list of available subcommands by typing **`ip ?`** at the **`configuration`** level.

```
localhost::configuration> ip ?
  address          admin            broadcast        mask
  route>           show             unconfigure
```

3.2.1 Configuring the IP Address

This command lets you configure an IP address for one of the TCM's IP interfaces. Enter the following parameters:

```
localhost::configuration ip> address <interface> <address>
```

interface Indicates the name of the IP interface to be managed.

address Indicates the IP address for this interface.

3.2.2 Configuring the IP State

This command lets enable or disable the IP interfaces on the TCM. Enter the following parameters:

```
localhost::configuration ip> admin <interface> (up|down)
```

interface Indicates the name of the IP interface to be managed.

up|down Entering `up` enables the designated interface. Entering `down` disables the designated interface.

3.2.3 Configuring the IP Broadcast Address

This command allows you to modify the broadcast address for one of the TCM's IP interfaces. Enter the following parameters:

```
localhost::configuration ip> broadcast <interface> (0|1)
```

interface Indicates the name of the IP interface.

0|1 Indicates the IP broadcast type for this interface. This is the host portion of the IP address that is used for routing. Entering `1` causes the host portion of the IP address to be set to all 1s. Entering `0` causes the host portion of the IP address to be set to all 0s.

3.2.4 Configuring the IP Subnet Mask

This command allows you to modify the IP subnet mask of one of the TCM's IP interfaces. Enter the following parameters:

```
localhost::configuration ip> mask <interface> <mask>
```

interface Indicates the name of the IP interface.

mask Indicates the subnet mask for this IP interface. It should be entered in dotted decimal notation (e.g., 255.255.255.0).

3.2.5 Configuring IP Routes

This command allows you to add a static IP route to the local IP routing table, delete a static IP route from the local IP routing table, or list the current static IP routes in the local IP routing table for one of the TCM's IP interfaces. You can display the list of available subcommands by typing **route ?** at the **ip** level.

```
localhost::configuration ip> route ?
  new              delete           show
```

3.2.5.1 Adding an IP Route

This command lets you create an IP route for one of the TCM's IP interfaces. Enter the following parameters:

```
localhost::configuration ip route> new (default|<destination-ipaddress>)
<gateway> [<metric>] [(host | net)]
```

default This parameter must be specified to create a default route.

destination -ipaddress Indicates the destination IP network number.

gateway Indicates the gateway address to the destination IP network number.

metric Indicates the number of hops to the destination IP network. The default value of `1` is used if no value is entered by the user. If `1` is specified, the route is created with the RTF_GATEWAY flag set.

host|net Using `host` indicates that this is a host-specific route with the destination being a specific node's IP address. Using `net` indicates that this is a network-specific route with the destination being a network IP address. The default value of `net` is used if no value is entered by the user.

3.2.5.2 Deleting an IP Route

This command lets you delete an IP route from one of the TCM's IP interfaces. Enter the following parameters:

```
localhost::config ip route> delete (default|<destination-ipaddress>) <gateway>
```

default A default must be specified to delete a default route.

destination -ipaddress Indicates the destination IP network number.

gateway Indicates the gateway address to the destination IP network number.

3.2.5.3 Showing the IP Routes

This command lets you display the current IP routes for the TCM's IP interfaces. Enter the following parameters:

```
localhost::configuration ip route> show
Destination      Gateway          Metric      Interface      Flags
default          198.29.31.75     1           ie0            G
127.0.0.1        127.0.0.1        0           lo0
169.144.85.3     198.29.31.75     1           ie0            G
198.29.31.0      198.29.31.28     0           ie0
```

The fields in this display are defined as follows:

Destination Shows the destination IP network.

Gateway Shows the gateway address to the destination IP network number.

Metric Shows the number of hops to the destination IP network. The default is `1`.

Interface Shows the local IP interface used to get to the destination IP network.

Flags Shows `H` if the route is host-specific (created with the RTF_HOST flag set). Lists `G` if the route is network-specific (created with the RTF_GATEWAY flag set).

3.2.6 Displaying the IP Interface Configuration

This command allows you to display information about the configuration of the TCM's IP interfaces. Enter the following parameters:

```
localhost::configuration ip> show
interface  state        address         netmask         broadcast
ie0        up           169.144.28.125  255.255.255.0   169.144.28.255
ie1        up           169.144.28.225  255.255.255.0   169.144.28.255
lo0        up           127.0.0.1       255.0.0.0       N/A
```

The fields in this display are defined as follows:

interface Indicates the name of the IP interface.

state Lists the administrative state of the IP interface.

address Displays the IP address of the IP interface.

netmask Shows the netmask address of the IP interface.

broadcast Indicates the broadcast address of the IP interface.

You may also designate a single interface to be displayed by entering **show** and the specific interface name at the prompt as follows:

```
localhost::configuration ip> show ie0
interface  state        address         netmask         broadcast
ie0        up           169.144.28.125  255.255.255.0   169.144.28.255
```

The fields in this display are defined in the same manner as those listed above in the example for showing the configuration of all of the IP interfaces.

3.2.7 Unconfiguring an IP Interface

This command lets you unconfigure one of the TCM's IP interfaces. This process removes the IP address associated with the interface. Enter the following parameters:

```
localhost::configuration ip> unconfigure <interface>
```

interface Indicates the name of the IP interface to be unconfigured.

You are asked to confirm this action. To confirm the action, type **y** at the prompt. For example:

```
localhost::configuration ip> unconfigure ie1
Unconfiguring an interface requires the TCM to be rebooted.
Continue with unconfigure [n]? y

Reboot the TCM [y]? y
```

NOTE The TCM must be rebooted for this command to take effect.

To cancel the action, type **n** or press **<ENTER>** at the prompt. For example:

```
localhost::configuration ip> unconfigure ie1
Unconfiguring an interface requires the TCM to be rebooted.
Continue with unconfigure [n]? n
```

3.3 Serial Port Configuration

This command lets you display configuration information for the RS-232 serial port on the front panel of the TCM. You can display the available subcommand by typing **rs232 ?** at the **configuration** level.

```
localhost::configuration> rs232 ?
  show
```

3.3.1 Displaying Serial Port Information

This command allows you to display the settings for the RS-232 serial port on the TCM. Enter the following parameters:

```
localhost::configuration rs232> show
Port     Type        Speed   Flow     Bits   Stops      Parity
A        rs232        9600   none        8   one        none
```

The fields in this display are defined as follows:

Port Shows the physical port designation.

Type Shows the signalling standard used.

Speed Shows the receive/transmit rate in bits per second.

Flow Shows the type of flow control implemented on the given port.

Bits Shows the number of bit times in a single character.

Stops Shows the number of stop bits in a character frame.

Parity Shows the parity setting for the ports.

3.4 SNMP Configuration Commands

These commands enable you to manage the SNMP communities and traps. You can display the list of available subcommands by typing **snmp ?** at the **configuration** level.

```
localhost::configuration> snmp ?
community              trap>
```

3.4.1 Configuring the SNMP Community Access

This command lets you modify the SNMP community access to EMI. Enter the following parameters:

```
localhost::configuration snmp> community (read|write) <community>
```

read|write — `read` sets the community string for SNMP read operations (`get` and `getnext` requests). `write` sets the community string for SNMP write operations (`set` requests).

community — Indicates the community string associated with `read` or with `write`. The default community string associated with `read` is `public`. The default community string associated with `write` is `private`.

3.4.2 Configuring SNMP Traps

These commands help you to manage SNMP traps. You can display the list of available subcommands by typing **trap ?** at the **snmp** level.

```
localhost::configuration snmp> trap ?
delete         new            show
```

3.4.2.1 Deleting an SNMP Trap Entry

This command allows you to delete an existing SNMP trap destination. Before deleting a trap that may need to be recreated later, show the list of current SNMP traps and either copy and save the screen or write down the trap destinations. You will also need to show the list of current SNMP traps in order to find the number of the trap to be deleted. Enter the following parameters to delete a trap entry:

```
localhost::configuration snmp trap> delete <trap>
```

trap Indicates the number of the trap destination in the list of current SNMP traps that is to be removed.

For example, to delete trap 198.29.31.130, first list the traps to find its number and copy the address in case you want to recreate it later:

```
localhost::configuration snmp trap> show
Trap    Destination
1       192.88.243.18
2       198.29.16.14
3       198.29.16.18
4       198.29.23.39
5       198.29.31.130
```

Then enter the following parameters:

```
localhost::configuration snmp trap> delete 5
```

You can display the list again to verify that the trap has been deleted:

```
localhost::configuration snmp trap> show
Trap    Destination
1       192.88.243.18
2       198.29.16.14
3       198.29.16.18
4       198.29.23.39
```

3.4.2.2 Creating an SNMP Trap Entry

This command allows you to specify a host to which an TCM can send SNMP traps. Enter the IP address of the SNMP trap destination to be added. Repeat this for as many SNMP trap destinations as needed. Traps are active as soon as they are set. Enter the following parameters:

```
localhost::configuration snmp trap> new <ipaddress>
```

ipaddress Indicates the IP address of the trap destination to be created.

3.4.2.3 Displaying the SNMP Trap Entries

This command enables you to list all of the current SNMP traps. Enter the following parameters:

```
localhost::configuration snmp trap> show
Trap    Destination
1       192.88.243.18
2       198.29.16.14
3       198.29.16.18
4       198.29.23.39
5       198.29.31.130
```

If no SNMP traps have been configured, the following message is displayed:

```
No trap information is available
```

3.5 System Configuration Commands

These commands let you configure the transfer protocol to be used when transferring files, configure system message log features, and configure the amount of time of non-activity after which an EMI session times out. Type **system ?** at the **configuration** level to display the list of available subcommands.

```
localhost::configuration> system ?
  protocol         show             syslog>          timeout
```

3.5.1 Changing the System Protocol

This command lets you configure which transfer protocol is used when performing file transfers for various EMI commands such as upgrading the software or backing up the CDB.

```
localhost::configuration system> protocol (ftp | tftp)
```

ftp|tftp — `ftp` means that ftp is the transfer protocol that is used when performing file transfers on this TCM and `tftp` means that tftp is used.

3.5.2 Displaying the System Configuration

This command lets you display the amount of time of non-activity after which an EMI session will time out and display what type of transfer protocol is used for file transfers on this TCM. You can get to this level by entering **show** at the **system** level. Enter the following parameters:

```
localhost::configuration system> show
EMI Session Timeout                          5
File Transfer Protocol                       tftp
```

EMI Session Timeout — Shows the number of minutes of no activity after which an EMI session times out and exits you out of the session. The default is `5` minutes. `off` means that the EMI session will not time out.

File Transfer Protocol — `ftp` means that ftp is the transfer protocol that is used when performing file transfers on this TCM and `tftp` means that tftp is used.

3.5.3 System Log Configuration Commands

Syslog is a tool that can send the TCM's system messages to be logged to a user-specified remote host. These commands let you configure the address of the remote syslog host and whether or not these messages are sent to the console. Enter **syslog ?** at the **system** level to show the list of available **syslog** commands.

```
localhost::configuration system> syslog ?
  show            set             delete          console
```

3.5.3.1 Displaying the Address of the System Log Host

This command allows you to display the address of the host to which the TCM's system messages are logged. Enter the following parameters:

```
localhost::configuration system syslog> show
Remote Syslog Host: 169.144.1.216
Syslog Facility: daemon
```

If the host's address has never been set, or if it has been deleted and not set again, the following is shown:

```
localhost::configuration system syslog> show
No remote syslog host set. Syslog messages will not be sent.
Syslog Facility: daemon
```

3.5.3.2 Setting the Address of the System Log Host

This command sets the address of the host to which the TCM's system messages are being logged. You may also opt to assign a specific facility name so that the remote syslog can automatically differentiate between TCMs with different facilities. Enter the following parameters:

```
localhost::configuration system syslog> set <address> [<facility>]
```

address Indicates the IP address of the remote host to which the TCM's system message logs are sent.

facility Indicates the user-assigned name that identifies the facility this TCM sends syslogs on. The default is `daemon`. Other valid values are `local0` through `local7`. The names may be assigned in any order.

For example, to have a host with the address 192.88.243.118 be the recipient of the system log messages and to designate this TCM's facility name as `local2`, enter the following parameters:

```
localhost::configuration system syslog> set 192.88.243.118 local2
Remote Syslog Host: 192.88.243.118
Syslog Facility is now local2
```

To assign the facility for other TCMs in your network, you must log in to each one locally and set the facility. You must keep track of which facility was assigned to each TCM. Then, when you view the contents of the syslog file, they can be separated according to facility when messages from different facilities are logged on the same remote host.

3.5.3.3 Deleting the Address of the System Log Host

This command allows you to delete the address of the host to which the TCM's system messages are being logged. Enter the following parameters:

```
localhost::configuration system syslog> delete

Remove 192.88.243.118 as remote syslog host [n]? y
Remote syslog host removed. Syslog messages will not be sent.
Syslog Facility: local7
```

The TCM prompts you to confirm that the address should be deleted. Entering **y** causes the TCM to delete the address, as shown above. If you do not want the address to be deleted, enter **n** or press **<RETURN>** and you will be sent back to the **syslog** prompt.

Once the host's address has been deleted, the TCM's system messages are no longer logged until a new host address is set. However, if a facility has been assigned to the TCM, that facility assignment remains intact. So if you assign another host without changing the facility, the new host will list this TCM's syslog messages under the same facility. For example,

```
localhost::configuration system syslog> show
Remote Syslog Host: 169.144.48.41
Syslog Facility: local7

localhost::configuration system syslog> delete
Remove 169.144.48.41 as remote syslog host [n]? y
Remote syslog host removed. Syslog messages will not be sent.

localhost::configuration system syslog> show
No remote syslog host set. Syslog messages will not be sent.
Syslog Facility: local7

localhost::configuration system syslog> set 204.95.89.84
Remote Syslog Host: 204.95.89.84

localhost::configuration system syslog> show
Remote Syslog Host: 204.95.89.84
Syslog Facility: local7
```

3.5.3.4 Turning Off or Turning On System Log Messages to the Console

The TCM's system log messages may be directed to three places: to syslog, to the console, and to a remote host. The **console** command can be used in different ways.

To display whether or not log messages are being output to the console, enter **console** without any arguments as follows:

```
localhost::configuration system syslog> console
```

If the messages are being sent to the console, the following message is shown:

```
Syslog console output is currently ON.
```

If the messages are not being directed to the console, the following message is displayed:

```
Syslog console output is currently OFF.
```

To enable log messages to be sent to the console, or to stop log messages from being output to the console, enter **console** with the appropriate argument as follows:

```
localhost::configuration system syslog> console [enable|disable]
```

enable Indicates that all log messages will be written to the console.

disable Indicates that no log messages will be written to the console.

3.5.4 EMI Timeout Configuration Command

This command lets you set the amount of time of non-activity after which an EMI session times out. You can get to this level by entering **timeout** at the **system** level. Enter the following parameters:

```
localhost::configuration system> timeout [<minutes>]
```

minutes Indicates the number of minutes of non-activity after which an EMI session times out and exits you out of the session. The default is 5 minutes. To configure the TCM so that an EMI session does not time out, enter 0. It is displayed as off when you use **configuration system show**.

3.6 TCM Configuration Commands

This submenu allows you to assign or change the name of the TCM and to show information about the TCM. You can display the list of available subcommands by typing **tcm ?** at the **configuration** level.

```
localhost::configuration> tcm ?
  name            show            timezone
```

3.6.1 Setting or Changing the TCM's Name

This command lets you set or change the name of the TCM. Enter the following parameters:

```
localhost::configuration tcm> name <name>
```

name Indicates the new system name for the TCM.

For example, to set the TCM's name to `linus`, enter the following parameters:

```
localhost::configuration tcm> name linus
```

3.6.2 Displaying TCM Information

This command lets you display information about the TCM to which you are logged in. Enter the following parameters:

```
localhost::configuration tcm> show
TCM 'linus', Type cec-plus, up 2 days 18:27
Hardware version A, Software version T_ForeThought_5.3.0 (1.25604)
Serial number                           10
Slot                                    X
State                                   active
Time zone                               N/A
External Inputs (1-5)                   off off off off off
Change to active operation occurred at Jul 2  15:29:08 1998
ESI module is present.
```

The fields in this display have the following meanings:

TCM Shows this TCM's system name.

Type Shows what type of TCM this is.

up Shows the amount of time (in days, hours, and minutes) since this TCM has been rebooted.

Hardware version Shows the hardware version of this TCM.

Software version Shows the software version being used by this TCM.

Serial number Shows the serial number of this TCM card.

Slot Shows the slot in which this TCM resides. `X` indicates the top slot and `Y` indicates the bottom slot.

State Shows the current state of this TCM. `active` means this TCM is the controller and is functioning properly. `standby` means this is the standby TCM. `offline` means the timing has failed on this TCM.

Time zone Shows the time zone configured for this TCM. If this field reads `N/A`, then this value has not been configured yet.

External Inputs Shows the current state of each of the five front panel external inputs from the viewpoint of this TCM. Can be either `on` (input being received) or `off` (no input).

Active operation Shows when this TCM control software switched to the current operating mode.

ESI module Shows the External Synchronization Interface (ESI) card status from the viewpoint of this TCM. Can be either `present` or `absent`.

Other TCM status If another TCM is not plugged in, then nothing is displayed. If another TCM is plugged in, shows the software status of the other TCM from the viewpoint of this TCM. If this TCM is the controller, `normal` means the standby TCM is actively updating and waiting to be called into service, and `unknown` means the standby TCM is down. If this TCM is the standby, `active` means the controller TCM is functioning normally.

3.6.3 Setting or Changing the Timezone

This command enables you to set or change the timezone on the TCM. Enter the following parameters:

```
localhost::configuration tcm> timezone <timezone>
```

timezone The time zone configured for this TCM. The TCM supports and automatically converts from Standard to Daylight Savings time for the following time zones: `EST5EDT` (Eastern Standard Time), `CST6CDT` (Central Standard Time), `MST7MDT` (Mountain Standard Time), `PST8PDT` (Pacific Standard Time), `AKST9AKDT` (Alaska Standard Time).

Locations outside of the time zones listed above must supply the following POSIX standard 1003.1-1988 formula for switching between Daylight Savings Time and Standard Time:

`stdoffset [dst[offset][, start[/time], end[/time]]]`

std and dst Indicates 3 or more bytes that designate standard (`std`) or Daylight Savings Time (`dst`). Only `std` is required; if `dst` is omitted, then it does not apply in this location. Can use uppercase or lowercase letters and any characters, except a leading colon(:), digits, comma (,), minus (-), plus (+), and ACSII NUL.

offset Indicates the value to add to local time to equal Greenwich Mean Time. `offset` is of the form:

hh[:mm[:ss]]

Hour (`hh`) is required and can be a single digit between `0` and `24`. Minutes (`mm`) and seconds (`ss`) are optional and are between `0` and `59`. If no `offset` follows `dst`, it is assumed to be one hour ahead of `std`. If preceded by a "`-`", the time zone is east of the Prime Meridian; otherwise it is west (with an optional "`+`").

start[/time], end[/time]

`start` indicates the date when the change occurs from `std` to `dst`. `end` indicates the date when you change back. Both `start` and `end` are of the form:

Mm.n.d

`d` is the `d`-th day ($0 \le d \le 6$) of week `n` of month `m` of the year ($1 \le n \le 5, 1 \le m \le 12$), where week 5 is the last `d` day in month `m`, which can occur in either the fourth or the fifth week). Week 1 is the first week in which the `d`-th day occurs. Day 0 is Sunday. `time` is of the same format as `offset`, except that no leading "`-`" or "`+`" is allowed. If `time` is not entered, the default of `02:00:00` is used.

3.7 Timing Configuration Commands

NOTE

For more information about the timing functionality of the TCM, see Section 1.2 in Chapter 1.

For more information about how to use the commands described in this section, refer to Section 1.3, ”Timing Configuration Guidelines.”

These commands let you configure external synchronization timing. Type **`timing ?`** at the **`configuration`** level to display the list of available subcommands.

```
localhost::configuration> timing ?
  admin            bits>            failover>        mode
  primary          references       refqual          revertive>
  secondary        show
```

3.7.1 Configuring the Timing Reference's Administrative Status

This command lets you configure the administrative status of the timing reference that is provided to the ESI. You can get to this level by entering **admin** at the **timing** level. Enter the following parameters:

```
localhost::configuration timing> admin fabric (1 | 2 | 3 | 4) (primary |
secondary) (up | down)
or
admin (bits1 | bits2) (up | down)
```

fabric (1 | 2 | 3 | 4)	Indicates the switch fabric (1 - first (leftmost slot), 2 - second slot, 3 - third slot, 4 fourth slot) of the timing source for which you are changing the administrative status.
(primary | secondary)	Indicates for which timing source you are changing the administrative status.
(bits1 | bits2)	Indicates for which BITS timing source you are changing the administrative status.
(up | down)	up means you are enabling this timing source. down means you are disabling this timing source.

For example, if you wanted to disable the primary timing source that is being exported from fabric 3, then you would enter the following:

```
localhost::configuration timing> admin fabric 3 primary down
```

As another example, if you wanted to disable the bits1 timing source, then you would enter the following:

```
localhost::configuration timing> admin bits1 down
```

3.7.2 BITS Timing Configuration Commands

These commands let you configure the timing input and output for the BITS clock. You can display the list of available subcommands by entering **bits ?** at the **timing** level. Enter the following:

```
localhost::configuration timing> bits ?
  coding           framing          level
```

3.7.2.1 BITS Coding Configuration

This command lets you configure the coding of the DS1 BITS interface or the E1 BITS interface for this TCM. You can get to this level by entering **coding** at the **bits** level. Enter the following parameters:

```
localhost::configuration timing bits> coding (ami | b8zs) for DS1 interface
   Note: only hdb3 supported for E1 interface
```

ami Indicates that Alternate Mark Inversion (AMI) coding should be used for the BITS interface on the TCM. This means zeros are represented by 01 during each bit cell, and ones are represented by 11 or 00, alternately, during each bit cell. This technique requires that the sending device maintain ones density. Ones density is not maintained independent of the data stream.

b8zs Indicates that Binary 8-Zero Substitution (B8ZS) coding should be used for the TCM. This means a special code is substituted whenever eight consecutive zeros are sent through the link. This code is then interpreted at the remote end of the connection. This technique guarantees ones density independent of the data stream.

hdb3 Indicates that High Density Bipolar (HDB3) coding should be used for the TCM. HDB3 is a bipolar coding method that does not allow more than 3 consecutive zeroes.

3.7.2.2 BITS Framing Configuration

This command allows you to configure the framing format of the DS1 BITS interface or the E1 BITS interface for this TCM. You can get to this level by entering **framing** at the **bits** level. Enter the following parameters:

```
localhost::configuration timing bits> framing (d4 | esf) for DS1 interface
    or: framing (fas | fascrc4 | mfas | mfascrc4) for E1 interface
```

d4 Indicates that D4 (also known as Superframe (SF)) framing should be used for the BITS interface on the TCM. SF consists of 12 frames of 192 bits each, with the 193rd bit providing error checking and other functions.

esf Indicates that Extended Superframe (ESF) framing should be used for the BITS interface on the TCM. ESF provides frame synchronization, cyclic redundancy, and data link bits.

fas Indicates E1 framing that makes use of the Frame Alignment Signal.

fascrc4 Indicates E1 framing that makes use of the Frame Alignment Signal and CRC-4 checksums.

mfas Indicates E1 framing that makes use of the Multi-Frame Alignment Signal (sometimes referred to as TS16).

mfascrc4 Indicates E1 framing that makes use of the Multi-Frame Alignment Signal and CRC-4 checksums.

3.7.2.3 BITS Level Configuration

This command lets you configure the output level (dB) of the DS1 BITS interface for an TCM.

NOTE This command only applies to the DS1 BITS interface.

```
localhost::configuration timing bits> level (0.6 | 1.2 | 1.8 | 2.4 | 3.0)
```

0.6 Indicates that the output level for the BITS interface is 0.6 dB.

1.2 Indicates that the output level for the BITS interface is 1.2 dB.

1.8 Indicates that the output level for the BITS interface is 1.8 dB.

2.4 Indicates that the output level for the BITS interface is 2.4 dB.

3.0 Indicates that the output level for the BITS interface is 3.0 dB.

3.7.3 Failover Timing Configuration

This command lets you configure the timing failover delay. You can display the available sub-command by typing **`failover ?`** at the **`timing`** level.

```
localhost::configuration timing> failover ?
  delay
```

3.7.3.1 Configuring the Failover Timing Delay

This command lets you set the delay, in whole seconds, between the time that the primary reference fails and the time that the TCM is told to switch over to the secondary reference. Enter the following parameters:

```
localhost::configuration timing failover> delay <seconds>
```

seconds Indicates the amount of time after the failure of the primary reference before the TCM is instructed to switch to the secondary reference. The default is `0` seconds.

NOTE The failover delay should be left at `0` under normal circumstances. This parameter is only meaningful when the timing mode is `automatic`.

3.7.4 Timing Mode Configuration

This command lets you configure the timing references to be used with the TCMs. You can get to this level by entering **`mode`** at the **`timing`** level. Enter the following parameters:

```
localhost::conf timing> mode (freerun | primary | secondary | automatic | bits)
```

freerun Indicates that the TCM must use the local oscillator as its timing source.

primary Indicates that the TCM must use the primary timing source (as configured via **`conf timing primary`**).

secondary Indicates that the TCM must use the secondary timing source (as configured via **`conf timing secondary`**).

NOTE It is recommended that, when two clocks are available, `primary` and `secondary` modes only be used during diagnostics and maintenance because the TCM will not failover to another source when it is in one of these modes.

automatic This is the normal mode when using clocks recovered from network modules. See Section 1.2 in Chapter 1 for a description of how this mode works.

NOTE `automatic` mode is only valid when the primary and secondary sources are recovered from network modules.

bits Indicates that the TCM will automatically use the most appropriate BITS input.

NOTE Mode selection fails if no valid source is available for the requested mode.

3.7.5 Primary Timing Configuration

This command enables you to select the primary clock source from any of the switch fabrics' exported clocks. Enter the following parameters:

```
localhost::configuration timing> primary fabric (1 | 2 | 3 | 4) (primary |
secondary)
```

fabric (1|2|3|4) (primary| secondary) Indicates the primary timing source is to be taken from one of the exported clocks (either primary or secondary) from one of the switch fabrics (1 - first (leftmost slot), 2 - second slot, 3 - third slot, 4 fourth slot) switch fabric.

Before you configure the primary timing source, use the **`conf timing references`** command to display all of the possible clocking references, their specific sources, and whether or not they are actually available for you to use. The freerun oscillator is not listed there because it is always available.

NOTE If `primary` is in use, attempting to configure it to an unavailable source is ignored.

For example, to set the primary timing source to fabric 1's secondary exported clock, enter the following:

```
localhost::configuration timing> primary fabric 1 secondary
```

3.7.6 Displaying Timing References

This command lets you display all of the possible timing references from the switch. Enter the following parameters:

```
localhost::configuration timing> references
Reference               Source          Status          Admin   RefQual
fabric 1 primary        1A1             available       up      ok
fabric 1 secondary      1 (No Timing)   unavailable     up      ok
fabric 2 primary        2 (Down)        unavailable     up      ok
fabric 2 secondary      2 (Down)        unavailable     up      ok
fabric 3 primary        3 (No Timing)   unavailable     up      ok
fabric 3 secondary      3 (No Timing)   unavailable     up      ok
fabric 4 primary        4 (Down)        unavailable     up      ok
fabric 4 secondary      4 (Down)        unavailable     up      ok
tcm X                   BITS1           unavailable     up      ok
tcm Y                   BITS2           available       up      ok
```

The fields in this display are defined as follows:

Reference The name of the timing reference.

Source Shows from which network module port or BITS clock the timing is being derived for this fabric or TCM. If the port is listed in regular BNP notation (e.g., 3B2), this indicates the exported timing source from this port. If the port is listed as 3 (No Timing), then either this network module does not support distributed timing, or the switch has not been configured to **tcm** mode under **conf timing mode**. If the port is listed as 3 OSC, this indicates the timing source is the crystal oscillator on that network module. If the port is listed as 3 (Down), then this network module has been removed.

Status Shows if the timing source is available or not.

Admin The administrative status of the timing reference. up means it is enabled and down means it is disabled.

RefQual The reference quality (RefQual) status of the timing reference. ok means the source is valid. fail means the source has gone out of specification. It is recommended that you investigate and correct the cause prior to resetting. To make the source valid, you must manually reset the RefQual status of that source using the **conf timing refqual** command.

3.7.7 Clearing a Reference Quality Failure

This command lets you to clear a reference quality (RefQual) failure for a timing source. Once a RefQual failure has been declared for a timing source, it is considered invalid and cannot be used as a timing source until the failure is cleared. You can use this command to clear the failure and make the source a valid one again.

NOTE Before clearing the failure, it is recommended that you investigate the cause of the failure and correct it.

Enter the following:

```
localhost::configuration timing> refqual fabric (1 | 2 | 3 | 4) (primary |
secondary) clear
or
refqual (bits1 | bits2) clear
```

fabric (1 | 2 | 3 | 4)	Indicates the switch fabric (1 - first (leftmost slot), 2 - second slot, 3 - third slot, 4 fourth slot) of the timing source for which you are clearing the RefQual failure.
(primary | secondary)	Indicates for which timing source you are clearing the RefQual failure.
(bits1 | bits2)	Indicates for which BITS timing source you are clearing the RefQual failure.

3.7.8 Revertive Timing Configuration

These commands allow you to enable or to disable revertive switching, or to configure the length of the delay between the time that the failed primary clock is restored and the time that the TCM is told to revert to the primary clock. You can get to this level by entering **`revertive ?`** at the **`timing`** level.

```
localhost::configuration timing> revertive ?
  delay            disable          enable
```

NOTE Revertive timing is only available when the mode is configured to be **`automatic`** under **`conf timing mode`**.

3.7.8.1 Configuring the Revertive Timing Delay

When revertive timing is enabled and the primary clock fails, the TCM is told of the failure and is instructed to switch to the timing source that is configured as the secondary clock. To ensure that the primary source is good when it returns, this command lets you configure the amount of time, in whole seconds, between the time that the primary clock is restored and the time that the TCM is told to revert to the primary clock. Enter the following parameters:

```
localhost::configuration timing revertive> delay <seconds>
```

delay Indicates the amount of time after the restoration of the primary timing reference before the TCM is instructed to return to the primary timing reference. The default is 3 seconds.

3.7.8.2 Disabling Revertive Switching

This command lets you disable revertive switching between timing sources on this TCM. This means that, after a failover to the secondary source in `automatic` mode, the TCM will not attempt to re-select the primary source after it becomes valid. To disable revertive switching, enter the following parameters:

```
localhost::configuration timing revertive> disable
```

disable Indicates that revertive switching is going to be turned off.

NOTE This command takes effect as soon as you enter it.

3.7.8.3 Enabling Revertive Switching

This command lets you enable revertive switching between timing sources on this TCM. When revertive switching is enabled, the TCM uses the value that was last configured for the delay using **conf timing revertive delay**. To enable revertive switching, enter the following parameters:

```
localhost::configuration timing revertive> enable
```

enable Indicates that revertive switching is going to be turned on.

NOTE This command takes effect as soon as you enter it.

3.7.9 Secondary Timing Configuration

This command enables you to select the secondary clock source from any of the switch fabrics' exported clocks. You can get to this level by entering **secondary** at the **timing** level. Enter the following parameters:

```
localhost::configuration timing> secondary  fabric (1 | 2 | 3 | 4)
(primary | secondary)
```

fabric (1|2|3|4) (primary| secondary) Indicates the secondary timing source is to be taken from one of the exported clocks (either primary or secondary) from one of the switch fabrics (1 - first (leftmost slot), 2 - second slot, 3 - third slot, 4 fourth slot) switch fabric.

Before you configure the secondary timing source, use the **conf timing references** command to display all of the possible clocking references, their specific sources, and whether or not they are actually available for you to use. The freerun oscillator is not listed there because it is always available.

NOTE If secondary is in use, attempting to point it to an invalid source is ignored.

3.7.10 Displaying Timing

The **show** command lets you display the timing information that has been configured. Enter the following:

```
localhost::configuration timing> show

ESI module on 'linus', Card type DS1 Stratum 4

DS1 BITS interface framing esf, line coding b8zs
output level 0.6 dB

PLL Status                              freerun

Current Timing Reference                freerun
Requested Timing Reference              freerun

Primary Reference (1 (Down))            unavailable
Secondary Reference (1 (Down))          unavailable

BITS1 Reference                         unavailable
BITS2 Reference                         unavailable

Revertive Switching                     enabled
Revertive Switching Delay               3
Failover Switching Delay                0
```

The fields in this display are defined as follows:

ESI module The name of the TCM.

Card type The ESI card type for this TCM.

BITS interface framing The framing format of the DS1 or E1 BITS interface for this TCM. For DS1, framing can be `d4` or `esf`; for E1, framing can be `fas`, `fascrc4`, `mfas`, or `mfascrc4`.

line coding The coding format of the BITS interface for this TCM. For DS1, coding can be `ami` or `b8zs`; for E1, coding can only be `hdb3`.

output level The output level, in dB, of the BITS interface for this TCM. Can be `0.6`, `1.2`, `1.8`, `2.4`, or `3.0`. This field only applies to DS1.

PLL Status
The phase-locked loop (PLL) status for this TCM. Can be `freerun` meaning the local oscillator on the TCM is being used, `locked` meaning the current clock is good, `holdover` meaning the TCM has detected a clock source error and is using the last valid clock source, `acquire` meaning the TCM is trying to lock on to the current clock (this may take up to two minutes), or `refqual fail` meaning the reference quality of the current clock is out of specification and the TCM is in holdover.

Current Timing Reference
The actual timing reference that is currently being used. Can be `BITS1`, `BITS2`, `primary`, `secondary`, or `freerun`.

Requested Timing Reference
The timing reference that was configured. If this source fails, it will not match what is currently being used. Can be `BITS`, `automatic`, `primary`, `secondary`, or `freerun`.

Primary Reference
The timing source configured as the primary source. Can be one of the primary or secondary clocks exported from one of the switch fabrics (e.g., `1A1`, `1B2`, `2A1`, `2C2`, `3A1`, `3D4`, `4A3`, `4B2`).

Primary Status
Shows whether the timing source configured as the primary source is currently `available` or `unavailable`.

Secondary Reference
The timing source configured as the secondary source. Can be one of the primary or secondary clocks exported from one of the switch fabrics (e.g., `1A1`, `1B2`, `2A1`, `2B2`, `3A1`, `3B2`, `4A1`, `4B2`).

Secondary Status
Shows whether the timing source configured as the secondary source is currently `available` or `unavailable`.

Revertive Switching
Shows whether revertive switching is `enabled` or `disabled` (in `automatic` mode).

Revertive Switching Delay
The amount of time, in seconds, between the time that the primary clock is restored and the time that the TCM reverts to the primary clock (in `automatic` mode).

Failover Switching Delay
The amount of time, in seconds, after the failure of the primary clock source before the TCM switches to the secondary clock source (in `automatic` mode).

CHAPTER 4 EMI Operation Commands

This chapter contains a detailed description of the EMI **operation** commands. The main **operation** menu can be found at the root level. There are several commands available under **operation**. Commands that are submenus are immediately followed by a “>” symbol. Typing **operation ?** at the prompt at the root level displays the **operation** commands as follows:

```
localhost::> operation ?
  cdb>            date            environment>     flash>
  login>          panic>          reboot           upgrade
  version
```

Each of these commands and their submenu of commands (if applicable) are described in the following subsections.

4.1 Configuration Database (CDB) Commands

These commands allow the user to manage the configuration database (CDB). Typing **cdb ?** at the prompt at the **operation** level displays the **cdb** commands as follows:

```
localhost::operation> cdb ?
        backup          init            reset           restore
```

4.1.1 Backing Up the Database

This command lets the user make a backup of the configuration database. Enter the following parameters:

```
localhost::operation cdb> backup [<host>:]<full path to backup file>
```

host	Indicates the name or the IP address of the host to which the CDB file will be backed up.
full path to backup file	Indicates the full path name of the file to which the CDB will be backed up.

If you have configured the TCM to use tftp (using **conf system protocol**), you must first create an empty file in the `/tftpboot` directory on the remote host to receive the CDB. Use the **touch** command to do this. Then, use the **chmod** command to change the permissions of that file so that it will let the TCM write the backup CDB to that file.

Perform the following steps to back up your CDB:

1. First, telnet to your remote host and log in.
2. Enter the following commands in sequence:

```
cd  /tftpboot

touch <backup file name>

chmod 777 <backup file name>
```

3. Then exit from the telnet session.
4. Telnet to the TCM and log into EMI.

5. Enter the following command:

```
oper cdb backup <host>:/tftpboot/<backup file name>
```

You should receive the following message:

```
CDB backup was successful
```

Your backup file now resides in the file and on the host you specified.

4.1.2 Initializing the Database

This command lets the user initialize the CDB. The TCM asks you to verify this action before it re-initializes the CDB. Enter the following parameters:

```
localhost::operation cdb> init
This command will re-initialize the CDB and reboot the TCM
Do you really want to remove ALL permanent information from
the database INCLUDING the configuration of all the network
interfaces? [n] n

localhost::operation cdb>
```

4.1.3 Resetting the Database

This command enables the user to reset the configuration database. The only information that is retained is the IP configuration which includes the TCM name and interface descriptions. The TCM cautions the user that all other information is deleted. The TCM then asks the user to confirm that resetting the CDB is the desired action. Enter the following parameters:

```
localhost::operation cdb> reset

********** W A R N I N G **********

This operation resets the TCM configuration database.
As a result, the TCM control software will be restarted.
You will lose connectivity with the TCM while this
operation is progressing.

Are you sure you want to reset the CDB [n]? n
localhost::operation cdb>
```

If the user enters yes to the reset question, the TCM responds as follows:

```
Are you sure you want to reset the CDB [n]? y
The TCM will restart momentarily.
```

At this point, the TCM resets the CDB, closes the user out of all active sessions, and restarts the TCM. The user must then log in to EMI again to perform any more actions on the TCM.

4.1.4 Restoring the Database

This command allows the user to restore the configuration database. Enter the following parameters:

```
localhost::operation cdb> restore [<host>:]<full path to backup file>
```

host Specifies the IP address of the host on which the CDB file that is to be restored resides.

full path to backup file Indicates the full path name of the CDB file that is to be restored.

For example,

```
localhost::operation cdb> restore 169.144.28.101:/tftpboot/switch17.cdb

Restore procedure requires the TCM control software to restart

Continue with restore [n]?
```

NOTE You must reboot the TCM in order for this command to take effect.

4.2 Displaying and Setting the Date and Time

This command allows the user to display the current date and time for the TCM. To display this information, enter **date** at the **operation** level.

```
localhost::operation> date
Apr 5 10:38:00 1998
```

This command also enables the user to set the current date and time on the TCM. To set or change this information, enter the following parameters:

```
localhost::operation> date [gmt] [<mm>/<dd>/<yyyy> <hh>:<mm>:<ss>]
```

gmt Indicates the TCM's notion of Greenwich Mean Time. If **gmt** is specified, the time will be displayed/set as GMT rather than the local time.

mm/dd/yyyy Indicates the current date. Enter the month, the day, and the year numerically. For example, enter **03/11/1998**.

hh:mm:ss Indicates the current time. Enter the hour (in terms of a 24-hour clock; i.e., 1:00 pm is 13), the minutes, and the seconds. For example, to set the time as 2:02 pm, enter **14:02:00**.

NOTE You must restart the TCM for these changes to take effect.

4.3 Environment Commands

These commands allow the user to monitor the TCM's environmental parameters. Typing **environment ?** at the prompt at the **operation** level displays the subcommands as follows:

```
localhost::operation> environment ?
  cpu              enclosure>       fabric>          fans
  power            temperature
```

4.3.1 CPU Operation

This command lets the user display information about the CPU on an TCM. Enter the following parameters:

```
localhost::operation environment> cpu
 CPU        Type       State
 X          i960ca     normal
```

The fields in this display are defined as follows:

CPU Shows the slot in which the CPU resides. The letter indicates in which of the two slots it resides. X indicates the top slot and Y indicates the bottom slot.

Type Indicates the type of processor.

State Shows the current condition of the CPU. `normal` means the CPU is functioning properly and is the controlling CPU. `fail` means the CPU is not functioning properly.

4.3.2 Enclosure Operation Commands

These commands allow the user to monitor the temperature of the TCM's enclosure. Typing **`enclosure ?`** at the prompt at the **`environment`** level displays the **`enclosure`** commands as follows:

```
localhost::operation environment> enclosure ?
  show              temperature
```

4.3.2.1 Displaying the Enclosure Temperature

This command displays the current temperatures in degrees Celsius of the TCM's enclosure, the current state of the temperature sensor, and the current thresholds at which a temperature alarm trips and then later resets. Enter the following parameters:

```
localhost::operation environment enclosure> show
 Enclosure temperature is 22 C (normal)

 Enclosure alarm/trap reset threshold: 40 degrees C or lower
 Enclosure alarm/trap trip threshold: 45 degrees C or greater
```

4.3.2.2 Setting the Enclosure Temperature Threshold

This command allows the user to set the thresholds at which an enclosure temperature alarm is tripped and then later reset. Any temperature can cause the TCM to display a state of `normal` or `overTemp`, depending on the trip and reset thresholds set by the user. For example, a temperature of 55°C shows a state of `normal` if the trip threshold was 60°C and the enclosure temperature never reached 60°C, but it would show a state of `overTemp` if the enclosure temperature reached 60°C, and then had dropped to 55°C, but had not yet reached a reset threshold set at 50°C. Enter the following parameters:

```
localhost::operation environment enclosure> temperature <reset threshold>
<trip threshold>
```

reset threshold Indicates the temperature in ^{o}C at which an enclosure overtemperature alarm is reset. The default is 40°C.

trip threshold Indicates the temperature in ^{o}C at which an enclosure overtemperature alarm trips. The default is 45°C.

4.3.3 Switch Fabric Operation

These commands allow the user to monitor the temperature of the individual switch fabrics. Typing **fabric ?** at the prompt at the **environment** level displays the **fabric** commands as follows:

```
localhost::operation environment> fabric ?
  show             temperature
```

4.3.4 Showing Switch Fabric Temperature Information

This command displays the current temperatures in degrees Celsius of each installed switch fabric, the current state of the temperature sensor, and the current thresholds at which a temperature alarm trips and then later resets. The current temperature and state values are displayed for all installed fabrics. Enter the following parameters:

```
localhost::operation environment fabric> show
        Fabric     Deg C      State
        1          31         normal
        2          32         normal
        3          29         normal
        4          30         normal

 Alarm/trap reset threshold (this fabric): 60 degrees C or lower
Alarm/trap trip threshold (this fabric): 65 degrees C or greater
```

The fields in this display are defined as follows:

Fabric Shows the number of the fabrics currently installed in the switch. Switch fabric 1 is in the slot labeled 1 on the enclosure, switch fabric 2 is in the slot labeled 2 on the enclosure, and so on.

Deg C Lists the current temperature of the switch fabrics in degrees Celsius.

State Displays `overTemp` if an alarm has been tripped because of this sensor, based on the trip and reset values that have been configured. Shows `normal` if otherwise, or if the alarm has reset.

Alarm/trap reset threshold Shows the temperature in ^{o}C at which an overtemperature alarm is reset. For example, if you set the reset and trip thresholds to 50°C and 60°C, respectively, then the alarm trips at 60°C, and it resets when the temperature drops back down to 50°C.

Alarm/trap trip threshold Shows the temperature in ^{o}C at which an overtemperature alarm trips. For example, if you set the reset and trip thresholds to 50°C and 60°C, respectively, then the alarm trips at 60°C, and it resets when the temperature drops back down to 50°C.

4.3.5 Configuring the Switch Fabric Temperature Thresholds

This command allows the user to set the thresholds at which a fabric temperature alarm is tripped and then later reset. Any fabric temperature can cause the switch to display a state of `normal` or `overTemp`, depending on the trip and reset thresholds set by the user. For example, a temperature of 55°C shows a state of `normal` if the trip threshold was 60°C and the switch fabric temperature never reached 60°C, but it would show a state of `overTemp` if the switch fabric temperature reached 60°C, and then had dropped to 55°C, but had not yet reached a reset threshold set at 50°C. Enter the following parameters:

```
localhost::operation environment fabric> temperature <reset threshold>
<trip threshold>
```

reset threshold Indicates the temperature in ^{o}C at which an overtemperature alarm is reset. The default is 60°C.

trip threshold Indicates the temperature in ^{o}C at which an overtemperature alarm trips. The default is 65°C.

4.3.6 Fan Operation

This command enables the user to display information about the fans on the switch. Enter the following parameters:

```
localhost::operation environment> fans
 FanBank         FanBankState
 1               normal
 2               normal
 3               normal
 4               normal
```

FanBank FanBank corresponds to a single fan, indicating the number of the fan.

FanBankState Displays the current state of the fan. It reads normal if the fan is operating correctly. If the fan has malfunctioned, it reads failed.

4.3.7 Power Supply Operation

This command displays information about the power supplies in the switch. The following information is shown for a switch with model A DC power supplies:

```
localhost::operation environment> power
        PowerSupply  Type            InputState  OutputState S/N        Version
        1            ps48VDC         normal      normal      107         1
        2            ps48VDC         normal      normal      195         1
```

The following information is shown for a switch with model B DC power supplies:

```
localhost::operation environment> power
 PS  Type          InputState OutputState 5VoltState Current S/N  Version
 1   ps30ADC       normal     normal      normal     normal  10         1
 2   ps30ADC       normal     normal      normal     normal  10         1
```

The following information is shown for a switch with model A AC power supplies:

```
localhost::operation environment> power
 PowerSupply  Type            InputState  OutputState
 1            psAutoRangeAC   normal      normal
 2            psAutoRangeAC   normal      normal
```

The following information is shown for a switch with model B AC power supplies:

```
localhost::operation environment> power
 PowerSupply  Type            InputState  OutputState S/N        Version
 1            psRM1000HA      normal      normal      1415       1
 2            psRM1000HA      fail        normal      1450       1
```

The fields in these displays are defined as follows:

PowerSupply 1 indicates the power supply in slot 1 (the left slot) in the chassis and 2 indicates the power supply in slot 2 (the right slot) in the chassis.

Type Shows if it is an AC or a DC power supply.

InputState Shows if the voltage coming into the power supply is normal or not.

OutputState Shows if the voltage going out of the power supply is normal or not.

5VoltState Shows the state of the +5V output of this power supply.

Current Shows the state of the current on the input return path of this power supply.

S/N Shows the serial number of the power supply.

Version Shows the power supply's hardware version number.

4.3.8 Temperature Sensor Operation

This command enables the user to display information gathered by the overtemperature sensors. Enter the following parameters:

```
localhost::operation environment> temperature
        TemperatureSensor              SensorState
        enclosure                      normal
        power-supply-A                 normal
        power-supply-B                 normal
```

NOTE

The enclosure temperature includes the CEC-Plus temperature and the fabric temperatures. Normal temperature range is defined by **`oper env enclosure temp`** and **`oper env fabric temp`**.

`power-supply-x` is no longer monitored by PAMS and will always read normal.

The fields in this display are defined as follows:

TemperatureSensor Indicates where the temperature sensor is located on the unit.

SensorState Shows if the temperature at the specified location is normal or not.

4.4 FLASH Operation Commands

These commands enable management of the FLASH memory system. Typing **flash ?** at the prompt at the **operation** level displays the **flash** commands as follows:

```
localhost::operation> flash ?
        copy            delete          dir             free
        get             init            put             rename
```

4.4.1 Copying a File to FLASH Memory

This command allows the user to copy a file within the FLASH memory system. Enter the following parameters:

```
localhost::operation flash> copy <from> <to>
```

from Indicates the file to be copied.

to Indicates the file within the FLASH memory system to which the first file is copied.

4.4.2 Deleting a File from FLASH Memory

This command allows the user to delete a file from the FLASH memory system. Enter the following parameters:

```
localhost::operation flash> delete <file>
```

file Indicates the name of the file in FLASH memory that is to be deleted.

In order to delete a directory from the FLASH memory system, you must first delete all files in that directory. For example, you would list all directories in your FLASH memory system as follows:

```
localhost::operation flash> dir
TCM100/
```

Then you need to list all files in the directory that you want to delete as follows:

```
localhost::operation flash> dir TCM100/
100
```

Now delete the file in the directory as follows:

```
localhost::operation flash> del 100
```

Now you can delete the directory as follows:

```
localhost::operation flash> del TCM100/
```

4.4.3 Displaying the FLASH Memory Directory

This command enables the user to display the directory listing of the FLASH memory system. Enter the following parameters:

```
localhost::operation flash> dir
TCM100/

localhost::operation flash> dir [<file>]
```

You can also display the files in a directory. Enter the following parameters:

```
localhost::operation flash> dir TCM100/
FOREOS.EXE
```

4.4.4 Displaying Free Space on the FLASH File

This command lets the user display the amount of remaining free space in the FLASH memory system. Enter the following parameters:

```
localhost::operation flash> free
Doing garbage collection.....
There are 1833575 bytes of flash still available
```

4.4.5 Getting a FLASH File

This command lets the user retrieve a file from a remote host. Enter the following parameters:

```
localhost::operation flash> get <host:remotefile> <localfile>
```

host:remotefile Indicates the name of the host and file from which the file is to be retrieved.

localfile Indicates the name of the FLASH file where the retrieved file is to be stored.

4.4.6 Initializing the FLASH File

This command lets the user initialize the FLASH file.

CAUTION

Initializing the FLASH file deletes all information from the FLASH file, including the TCM software.

Because this action results in the removal of data, the TCM asks you to verify this action before it re-initializes the FLASH. Enter the following parameters:

```
localhost::operation flash> init
Are you sure you want to format the flash [n]? n

localhost::operation flash>
```

4.4.7 Putting a FLASH File on a Remote Host

This command allows the user to put a FLASH file on a remote host. Enter the following parameters:

```
localhost::operation flash> put <localfile> <host:remotefile>
```

localfile Indicates the name of the FLASH file to be copied.

host:remotefile Indicates the name of the host and file to which the FLASH file is to be copied.

4.4.8 Renaming a FLASH File

This command enables the user to rename a file that is in FLASH memory. Enter the following parameters:

```
localhost::operation flash> rename <from> <to>
```

from Indicates the current name of the file to be renamed.

to Indicates the new name of the file to be renamed.

4.5 Login Operation Commands

These commands enable you to configure the login parameters. Type **login ?** at the prompt at the **operation** level to display the **login** commands as follows:

```
localhost::operation> login ?
  backup          delete          new             password
  restore         setuser         show            whoami
```

4.5.1 Backing Up the Login File

This command lets you make a backup of the login file. Enter the following parameters:

```
localhost::operation login> backup [<host>:]<full path to backup file>
```

host Indicates the name or the IP address of the host to which the login file will be backed up.

full path to backup file Indicates the full path name of the file to which the login will be backed up.

If you have configured the TCM to use tftp (using **conf system protocol**), you must first create an empty file in the `/tftpboot` directory on the remote host to receive the login file. Use the **touch** command to do this. Then, use the **chmod** command to change the permissions of that file so that it will let the TCM write the backup login file to that file.

Perform the following steps to back up your file:

1. First, telnet to your remote host and log in.
2. Enter the following commands in sequence:

cd /tftpboot

touch <backup file name>

chmod 777 <backup file name>

3. Then exit from the telnet session.
4. Telnet to the TCM and log into EMI.

5. Enter the following command:

oper login backup <host>:/tftpboot/<backup file name>

You should receive the following message:

```
Login backup was successful
```

Your backup file now resides in the file and on the host you specified.

4.5.2 Deleting a User from the Login File

This command allows you to delete a user from the current login file. Enter the following parameters:

```
localhost::operation login> delete <userid>
```

userid Indicates the userid you want to delete.

4.5.3 Creating a User in the Login File

This command lets you create a new user in the login file. Enter the following parameters:

```
localhost::operation login> new <userid>
```

userid Indicates the userid you want to create.

4.5.4 Assigning a Password to a User

This command allows you to assign a password to a user in the login file. Enter the following parameters:

```
localhost::operation login> password [<userid>]
```

userid Indicates the password you want to use for this userid.

4.5.5 Restoring the Login File

This command allows the user to restore the login file that was backed up. Enter the following parameters:

```
localhost::operation login> restore [<host>:]<full path to backup file>
```

host Specifies the IP address of the host on which the login file that is to be restored resides.

full path to backup file Indicates the full path name of the login file that is to be restored.

4.5.6 Assigning a New Userid to a User

This command lets you assign a new userid to the current user. Enter the following parameters:

```
localhost::operation login> setuser <userid>
```

userid Indicates the new userid that you want to assign to the current user.

4.5.7 Displaying the Userid Login Information

This command lets you display the login information. Enter the following parameters:

```
localhost::operation login> show
emi
```

4.5.8 Displaying the Login Userid

This command lets you display the login userid information for the current user. This tells the person who is currently logged in what his or her userid is. Enter the following parameters:

```
localhost::operation login> whoami
emi
```

4.6 Panic Acknowledgment Commands

On occasion, the TCM may go into a state called panic, in which it reboots, closes a user out of session, or goes into a hung or frozen state as the result of a software bug. When the TCM returns to a normal state and an active session is running again, the first thing you should do is to use the **operation panic show** EMI command to display information about what happened to the TCM when it panicked. This information helps FORE's Technical Support staff to diagnose the problem. Typing **panic ?** at the prompt at the **operation** level displays the **panic** commands as follows:

```
localhost::operation> panic ?
  action          clear           show
```

4.6.1 Setting the Panic Response

This command allows you to set the course of action that the TCM will take upon experiencing a panic condition. Enter the following parameters:

```
localhost::operation panic> action [(suspend | reboot)]
```

suspend Indicates that the TCM will hang in a suspended state upon experiencing a panic. There is no panic record logged.

reboot Indicates that the TCM will automatically reboot upon experiencing a panic. A panic record is logged. This is the default action.

NOTE It is highly recommended that you only use the **suspend** mode for diagnostic purposes. If **suspend** is the configured mode and the TCM panics, the TCM hangs until the user manually reboots the TCM. No automatic reboot will occur.

4.6.2 Clearing the Panic Flag

This command lets you clear the panic acknowledgment flag without viewing the contents of the panic dump file. Once the flag is cleared, the user may return to normal operation.

NOTE Do not clear a panic condition until after you have performed the following three steps.

1. Use the **`operation panic show`** command to display the contents of the panic file.
2. Cut and paste this panic file information to another file on a host and save that file.
3. Send this information via e-mail to FORE Technical Support along with a description of the events leading up to the panic. Ask the Technical Support staff to open a case for you based on that information. Once you have sent them the information, you may clear the panic.

Enter the following parameters to clear a panic condition:

```
localhost::operation panic> clear
OK.
```

The message above is shown when a panic has been cleared.

The message below is shown when no panic dump file exists (i.e., the TCM did not panic).

```
localhost::operation panic> clear
There is no panic condition to clear.
```

4.6.3 Displaying the Panic Dump File

This command lets the user view the contents of the panic dump file, which contains information about what happened to the TCM when it panicked, without clearing the panic flag. This information can assist FORE's Technical Support staff in troubleshooting the cause of the panic. Once the flag is cleared, the user may return to normal operation.

The following is an example of the kind of message that appears on your console when a panic occurs:

```
ForeThought CEC Control Software
Copyright (C) 1997-1998 FORE Systems, Inc.
All rights reserved.
APR 28 13:53:14 tEcp[X]: NOTICE: ForeThought CEC Control Software
APR 28 13:53:14 tEcp[X]: NOTICE: @(#) $Id: T_ForeThought_5.2.0 (1.20089)
(new@10089+2 98/04/15 11:49:39) $
APR 28 13:53:14 tEcp[X]: NOTICE: WED APR 28 13:53:14 1998
APR 28 13:53:14 tEcp[X]: NOTICE: Initializing TID = Oxaaf60
APR 28 13:53:14 tEcp[X]: -ERROR-: ----------------------------------------------------------------
APR 28 13:53:14 tEcp[X]: -ERROR-: The last recorded panic occurred at WED APR 28 13:52:51 1998
APR 28 13:53:14 tEcp[X]: -ERROR-: It was for version T 5.2.0 revision 1.20089 with 2 deltas.
APR 28 13:53:14 tEcp[X]: -ERROR-: Message: [flt Ox201@0xl8e550 (0)]
APR 28 13:53:14 tEcp[X]: -ERROR-: Global registers:
APR 28 13:53:14 tEcp[X]: -ERROR-: G0  00000000        G1 00000000    G2 00000000    G3 00000000
APR 28 13:53:14 tEcp[X]: -ERROR-: G4  00000000        G5 00000000    G6 00000000    G7 00000000
APR 28 13:53:14 tEcp[X]: -ERROR-: G8  00000000        G9 00000000    G10 00000000   G11 00000000
APR 28 13:53:14 tEcp[X]: -ERROR-: G12 0000000D        G13 00070A70   G14 00000000   G15 00070B30
APR 28 13:53:14 tEcp[X]: -ERROR-: Stack trace:
APR 28 13:53:14 tEcp[X]: -ERROR-:       0. 00100270
APR 28 13:53:14 tEcp[X]: -ERROR-:       1. 0018E550
APR 28 13:53:14 tEcp[X]: -ERROR-:       2. 00143DF0
APR 28 13:53:14 tEcp[X]: -ERROR-:       3. 00145D88
APR 28 13:53:14 tEcp[X]: -ERROR-:       4. 001422F0
APR 28 13:53:14 tEcp[X]: -ERROR-:       5. 0014218C
APR 28 13:53:14 tEcp[X]: -ERROR-:       6. 00141FB4
APR 28 13:53:14 tEcp[X]: -ERROR-:       7. 001906A8
APR 28 13:53:14 tEcp[X]: -ERROR-:       8. 00113474
APR 28 13:53:14 tEcp[X]: -ERROR-: ----------------------------------------------------------------
APR 28 13:53:14 tEcp[X]: NOTICE: Commencing transition to active mode
APR 28 13:53:14 tEcp[X]: NOTICE: Now operating in active mode
T_ForeThought_5.2.0 (cec-plus) (linus)
login:
```

At this point, the user must log in to EMI and enter the following parameters to display the panic message:

```
localhost::> oper panic show
-----------------------------------------------------------------------------
The last recorded panic occurred at WED APR 25 12:15:32 1998
It was for version T 5.2.0 revision 1.0 with 6 deltas.
Message: [flt 0x180@0x1292f0 (0)]
Global registers:
   G0  FFFFFFFF   G1  001A0F68   G2  001F0000   G3  001F4768
   G4  000000FF   G5  000A6690   G6  007FCC14   G7  00318E30
   G8  000A7C00   G9  00000000   G10 000A6FD3   G11 00000000
   G12 0000000D   G13 FFFFFFFF   G14 00000000   G15 000A7FF0
Stack trace:
    0. 00101414
    1. 00100270
    2. 001292F0
    3. 0015EEAC
    4. 0015278C
    5. 00152234
    6. 00161FFC
    7. 00134F14
    8. 00114BD0
    9. 001A1874
-----------------------------------------------------------------------------
```

Once the information has been displayed, follow the steps listed in the previous subsection for clearing a panic.

The following message is displayed whenever there is no panic dump file:

```
localhost::operation panic> show
There is no panic dump to show you.
```

NOTE

If the TCM panics, the panic file is automatically written to syslog upon reboot, provided that a syslog host had been set prior to the panic. This is especially useful if multiple panics occur, so that each is recorded separately and is not overwritten as they are here. For more information about setting the syslog host, please refer to Section 3.5.3 of this manual.

4.7 Upgrading the TCM Software

This command allows the user to upgrade the software on an individual TCM. The user can get to this level by entering **upgrade** at the **operation** level.

NOTE

It is important that the switch software and the TCM software are at the same revision level; e.g., if you upgrade the TCM software to `T_ForeThought_5.2.0`, then the switch software on the SCPs must be upgraded to `S_ForeThought_5.2.0`, and vice versa. It does not matter in which order you upgrade the software. However, there will be a temporary disruption in the timing until the entire upgrade is complete.

Enter the following parameters:

```
localhost::operation> upgrade <remotehost>:<full path to remotefile>
```

remotehost Indicates the IP address of the remote host on which the upgrade file resides.

full path to remotefile Indicates the full path name of the upgrade file.

4.8 Displaying and Changing the Version of Software

This command allows the user to display and/or change the version of software that is currently running on the TCM. To display the current version, enter the following parameters:

```
localhost::operation> version
Current software version is TCM100
Software versions installed : TCM100
```

If more than one version is installed, you can type the following parameters to change the current version:

```
localhost::operation> version [<new-version>]
```

new-version Indicates the name of the software version with which the user wants to replace the current version.

After changing the current version, the user is prompted to reboot, as shown below:

```
Reboot the TCM [y]?
```

To reboot the TCM with the new version, type `y` and press `<ENTER>`, or simply press `<ENTER>`. To postpone the reboot, type `n` and press `<ENTER>`.

NOTE Even if the TCM is not rebooted, the current version is still the one that was indicated with the **`version`** command, and this version will be used the next time the TCM is rebooted.

4.9 Rebooting the TCM

This command enables the user to reboot the TCM. You can get to this level by entering **reboot** at the **operation** level. You are asked to verify that you want to take this action. Enter the following parameters:

```
localhost::operation> reboot

Are you sure you want to reboot this TCM [n]? y
```

Upon reboot, the TCM immediately closes the user out of all open EMI sessions.

CHAPTER 5 EMI Statistics Commands

This chapter contains a detailed description of the EMI statistics commands that display operational performance and error information received by the TCM. The main **statistics** menu can be found at the root level. To display the available commands, type **?** at the **statistics** level as follows:

```
localhost::>statistics ?
  icmp            interface        ip              system>
  tcp             udp
```

Each of these commands is described in the following subsections.

5.1 ICMP Statistics

You can list ICMP statistics for the interfaces by entering **icmp** at the **statistics** level as follows:

```
localhost::statistics> icmp
icmp Counter                          Value                Delta
----------------------------- -------------------- --------------------
icmpInMsgs                                       1                    0
icmpInErrors                                     0                    0
icmpInDestUnreachs                               1                    0
icmpInTimeExcds                                  0                    0
icmpInParmProbs                                  0                    0
icmpInSrcQuenchs                                 0                    0
icmpInRedirects                                  0                    0
icmpInEchos                                      0                    0
icmpInEchoReps                                   0                    0
icmpInTimestamps                                 0                    0
icmpInTimestampReps                              0                    0
icmpInAddrMasks                                  0                    0
icmpInAddrMaskReps                               0                    0
icmpOutMsgs                                      1                    0
icmpOutErrors                                    1                    0
icmpOutDestUnreachs                              1                    0
icmpOutTimeExcds                                 0                    0
icmpOutParmProbs                                 0                    0
icmpOutSrcQuenchs                                0                    0
icmpOutRedirects                                 0                    0
icmpOutEchos                                     0                    0
icmpOutEchoReps                                  0                    0
icmpOutTimestamps                                0                    0
icmpOutTimestampReps                             0                    0
icmpOutAddrMasks                                 0                    0
icmpOutAddrMaskReps                              0                    0
```

The fields in this display have the following meanings:

icmpInMsgs Shows the total number of ICMP messages which the entity received. This counter includes all those counted by `icmpInErrors`.

icmpInErrors Shows the number of ICMP messages which the entity received but determined as having ICMP-specific errors (bad ICMP checksums, bad length, etc.).

icmpInDest Unreachs Shows the number of ICMP Destination Unreachable messages received.

icmpInTimeExcds Shows the number of ICMP Time Exceeded messages received.

icmpInParmProbs Shows the number of ICMP Parameter Problem messages received.

icmpInSrcQuenchs Shows the number of ICMP Source Quench messages received.

icmpInRedirects Shows the number of ICMP Redirect messages received.

icmpInEchos Shows the number of ICMP Echo (request) messages received.

icmpInEchoReps Shows the number of ICMP Echo Reply messages received.

icmpInTimestamps Shows the number of ICMP Timestamp (request) messages received.

icmpInTimestamp Reps Shows the number of ICMP Timestamp Reply messages received.

icmpInAddrMasks Shows the number of ICMP Address Mask Request messages received.

icmpInAddr MaskReps Shows the number of ICMP Address Mask Reply messages received.

icmpOutMsgs Shows the total number of ICMP messages which this entity attempted to send. Note that this counter includes all those counted by icmpOutErrors.

icmpOutErrors Shows the number of ICMP messages which this entity did not send due to problems discovered within ICMP such as a lack of buffers. This value should not include errors discovered outside the ICMP layer such as the inability of IP to route the resultant datagram. In some implementations there may be no types of error which contribute to this counter's value.

icmpOutDest Unreachs	Shows the number of ICMP Destination Unreachable messages sent.
icmpOutTimeExcds	Shows the number of ICMP Time Exceeded messages sent.
icmpOutParm Probs	Shows the number of ICMP Parameter Problem messages sent.
icmpOutSrc Quenchs	Shows the number of ICMP Source Quench messages sent.
icmpOutRedirects	Shows the number of ICMP Redirect messages sent. For a host, this object is always zero, since hosts do not send redirects.
icmpOutEchos	Shows the number of ICMP Echo (request) messages sent.
icmpOutEchoReps	Shows the number of ICMP Echo Reply messages sent.
icmpOut Timestamps	Shows the number of ICMP Timestamp (request) messages sent.
icmpOut TimestampReps	Shows the number of ICMP Timestamp Reply messages sent.
icmpOutAddr Masks	Shows the number of ICMP Address Mask Request messages sent.
icmpOutAddr MaskReps	Shows the number of ICMP Address Mask Reply messages sent.

NOTE

The value column displays the current value of the counter. The delta column displays the change in the counter since the last time you checked this value. The counters are reset when the switch is restarted.

5.2 Interface Statistics

You can list interface statistics for the TCM by entering **interface** at the **statistics** level as follows:

```
localhost::statistics> interface
Interface ie0 Counter                Value                Delta
----------------------------- -------------------- --------------------
ifInOctets                              4294967295                    0
ifInUcastPkts                                 4980                    0
ifInNUcastPkts                                   0                    0
ifInDiscards                                     0                    0
ifInErrors                                       0                    0
ifInUnknownProtos                                0                    0
ifOutOctets                             4294967295                    0
ifOutUcastPkts                                1549                    0
ifOutNUcastPkts                                  0                    0
ifOutDiscards                                    0                    0
ifOutErrors                                      1                    0
ifOutQLen                                        0                    0
Press return for more, q to quit: q
```

The fields in this display have the following meanings:

ifInOctets Indicates the total number of octets received on the interface, including framing characters.

ifInUcastPkts Shows the number of subnetwork-unicast packets delivered to a higher-layer protocol.

ifInNUcastPkts Lists the number of non-unicast (i.e., subnetwork-broadcast or subnetwork-multicast) packets delivered to a higher-layer protocol.

ifInDiscards Displays the number of inbound packets which were chosen to be discarded even though no errors had been detected to prevent their being deliverable to a higher-layer protocol. One possible reason for discarding such a packet could be to free up buffer space.

ifInErrors Indicates the number of inbound packets that contained errors preventing them from being deliverable to a higher-layer protocol.

ifInUnknown Protos Shows the number of packets received via the interface which were discarded because of an unknown or unsupported protocol.

ifOutOctets Displays the total number of octets transmitted out of the interface, including framing characters.

ifOutUcastPkts Lists the total number of packets that higher-level protocols requested be transmitted to a subnetwork-unicast address, including those that were discarded or not sent.

ifOutNUcastPkts Indicates the total number of packets that higher-level protocols requested be transmitted to a non-unicast (i.e., a subnetwork-broadcast or subnetwork-multicast) address, including those that were discarded or not sent.

ifOutDiscards Shows the number of outbound packets which were chosen to be discarded even though no errors had been detected to prevent their being transmitted. One possible reason for discarding such a packet could be to free up buffer space.

ifOutErrors Displays the number of outbound packets that could not be transmitted because of errors.

ifOutQLen Specifies the length of the output packet queue (in packets).

NOTE

The value column displays the current value of the counter. The delta column displays the change in the counter since the last time you checked this value. The counters are reset when the switch is restarted.

5.3 IP Statistics

You can display IP statistics for the TCM by entering **ip** at the **statistics** level as follows:

```
localhost::statistics> ip
ip Counter                          Value                Delta
------------------------------ -------------------- --------------------
ipInReceives                                   4546                    0
ipInHdrErrors                                     0                    0
ipInAddrErrors                                    2                    0
ipForwDatagrams                                   0                    0
ipInUnknownProtos                                 1                    0
ipInDiscards                                      0                    0
ipInDelivers                                   3443                    0
ipOutRequests                                  1655                    0
ipOutDiscards                                     0                    0
ipOutNoRoutes                                     0                    0
ipReasmReqds                                    220                    0
ipReasmOKs                                      220                    0
ipReasmFails                                      0                    0
ipFragOKs                                         0                    0
ipFragFails                                       0                    0
ipFragCreates                                     0                    0
```

The fields in this display have the following meanings:

ipInReceives Shows the total number of input datagrams received from interfaces, including those received in error.

ipInHdrErrors Lists the number of input datagrams discarded due to errors in their IP headers, including bad checksums, version number mismatch, other format errors, time-to-live exceeded, errors discovered in processing their IP options, etc.

ipInAddrErrors Shows the number of input datagrams discarded because the IP address in their IP header's destination field was not a valid address to be received at this entity. This includes invalid addresses (e.g., 0.0.0.0) and addresses of unsupported Classes (e.g., Class E). For entities which are not IP Gateways and, therefore, do not forward datagrams, this includes datagrams discarded because the destination address was not local.

ipForwDatagrams Shows the number of input datagrams for which this entity was not their final IP destination, as a result of which an attempt was made to find a route to forward them to that final destination. In entities which do not act as IP Gateways, this counter includes only those packets which were Source-Routed via this entity, and the Source-Route option processing was successful.

ipInUnknownProtos Shows the number of locally-addressed datagrams received successfully but discarded because of an unknown or unsupported protocol.

ipInDiscards Lists the number of input IP datagrams for which no problems were encountered to prevent their continued processing, but which were discarded (e.g., for lack of buffer space). This counter does not include any datagrams discarded while awaiting re-assembly.

ipInDelivers Shows the total number of input datagrams successfully delivered to IP user-protocols (including ICMP).

ipOutRequests Shows the total number of IP datagrams which local IP user-protocols (including ICMP) supplied to IP in requests for transmission. This counter does not include datagrams counted in `ipForwDatagrams`.

ipOutDiscards Displays the number of output IP datagrams for which no problem was encountered to prevent their transmission to their destination, but which were discarded (e.g., for lack of buffer space). This counter includes datagrams counted in `ipForwDatagrams` if any such packets met this (discretionary) discard criterion.

ipOutNoRoutes Lists the number of IP datagrams discarded because no route could be found to transmit them to their destination. This counter includes any packets counted in `ipForwDatagrams` which meet this “no-route” criterion. This includes datagrams which a host cannot route because all of its default gateways are down.

ipReasmReqds Shows the maximum number of seconds which received fragments are held while they are awaiting reassembly at this entity.

ipReasmOKs Shows the number of IP datagrams successfully reassembled.

ipReasmFails Shows the number of failures detected by the IP reassembly algorithm (for whatever reason: timed out, errors, etc). This is not necessarily a count of discarded IP fragments since some algorithms (notably the algorithm in RFC-815) can lose track of the number of fragments by combining them as they are received.

ipFragOKs Shows the number of IP datagrams that have been successfully fragmented at this entity.

ipFragFails Shows the number of IP datagrams that have been discarded because they needed to be fragmented at this entity but could not be; e.g., because their Don't Fragment flag was set.

ipFragCreates Shows the number of IP datagram fragments that have been generated as a result of fragmentation at this entity.

NOTE

The value column shows the current value of the counter. The delta column shows the change in the counter since the last time you checked it. The counters are reset when the switch is restarted.

5.4 TCP Statistics

You can display TCP statistics for the TCM by entering **tcp** at the **statistics** level as follows:

```
localhost::statistics> tcp
tcp Counter                          Value                Delta
----------------------------- -------------------- --------------------
tcpActiveOpens                                   1                    0
tcpPassiveOpens                                  3                    0
tcpAttemptFails                                  1                    0
tcpEstabResets                                   0                    0
tcpCurrEstab                                     1                    0
tcpInSegs                                     2183                   20
tcpOutSegs                                    1276                   14
tcpRetransSegs                                   2                    0
```

The fields in this display have the following meanings:

tcpActiveOpens Shows the number of times TCP connections have made a direct transition to the SYN-SENT state from the CLOSED state.

tcpPassiveOpens Lists the number of times TCP connections have made a direct transition to the SYN-RCVD state from the LISTEN state.

tcpAttemptFails Displays the number of times TCP connections have made a direct transition to the CLOSED state from either the SYN-SENT state or the SYN-RCVD state, plus the number of times TCP connections have made a direct transition to the LISTEN state from the SYN-RCVD state.

tcpEstabResets Indicates the number of times TCP connections have made a direct transition to the CLOSED state from either the ESTABLISHED state or the CLOSE-WAIT state.

tcpCurrEstab Shows the number of TCP connections for which the current state is either ESTABLISHED or CLOSE-WAIT.

tcpInSegs Lists the total number of segments received, including those received in error. This count includes segments received on currently established connections.

tcpOutSegs Displays the total number of segments sent, including those on current connections but excluding those containing only retransmitted octets.

tcpRetransSegs Indicates the total number of segments retransmitted; i.e., the number of TCP segments transmitted containing one or more previously transmitted octets.

NOTE

The value column displays the current value of the counter. The delta column displays the change in the counter since the last time you checked this value. The counters are reset when the switch is restarted.

5.5 UDP Statistics

You can display UDP statistics for the TCM by entering **udp** at the **statistics** level as follows:

```
localhost::statistics> udp
udp Counter                          Value                Delta
----------------------------- -------------------- --------------------
udpInDatagrams                                   0                    0
udpNoPorts                                       0                    0
udpInErrors                                      0                    0
udpOutDatagrams                                  0
```

The fields in this display have the following meanings:

udpInDatagrams Shows the total number of UDP datagrams delivered to UDP users.

udpNoPorts Lists the total number of received UDP datagrams for which there was no application at the destination port.

udpInErrors Indicates the number of received UDP datagrams that could not be delivered for reasons other than the lack of an application at the destination port.

udpOutDatagrams Displays the total number of UDP datagrams sent from this entity.

NOTE The value column displays the current value of the counter. The delta column displays the change in the counter since the last time you checked this value. The counters are reset when the switch is restarted.

Acronyms

The networking terms in the following list are defined in the Glossary of this manual. Glossary items are listed alphabetically according to the full term.

AAL	ATM Adaptation Layer
ABR	Available Bit Rate
ACM	Address Complete Message
ACR	Allowable Cell Rate
ADPCM	Adaptive Differential Pulse Code Modulation
AHFG	ATM-attached Host Functional Group
AIMUX	ATM Inverse Multiplexing
AIS	Alarm Indication Signal
AMI	Alternate Mark Inversion
AMI	ATM Management Interface
ANSI	American National Standards Institute
APCM	Adaptive Pulse Code Modulation
API	Application Program Interface
APP	Application Program
APS	Automatic Protection Switching
ARP	Address Resolution Protocol
ASCII	American Standard Code for Information Interchange
ATDM	Asynchronous Time Division Multiplexing
ATM	Asynchronous Transfer Mode
AUI	Attachment User Interface
B8ZS	Bipolar 8 Zero Substitution
BCOB	Broadband Connection Oriented Bearer
BCOB-A	Bearer Class A
BCOB-C	Bearer Class C
BCOB-X	Bearer Class X
BECN	Backward Explicit Congestion Notification
BER	Bit Error Rate
BES	Bursty Errored Seconds
BGP	Border Gateway Protocol
B-ICI	B-ISDN Inter-Carrier Interface.
BIP	Bit Interleaved Parity
B-ISDN	Broadband Integrated Services Digital Network
B-ISUP	Broadband ISDN User's Part

BITS	Building Integrated Timing Supply
BNC	Bayonet-Neill-Concelman
BPDU	Bridge Protocol Data Unit
bps	Bits per Second
BPV	Bipolar Violation
B-TE	Broadband Terminal Equipment
BUS	Broadcast and Unknown Server
CAC	Connection Admission Control
CAS	Channel Associated Signaling
CBDS	Connectionless Broadband Data Service
CBR	Constant Bit Rate
CCITT	International Telephone and Telegraph Consultative Committee
CCS	Common Channel Signaling
CDV	Cell Delay Variation
CE	Connection Endpoint
CEI	Connection Endpoint Identifier
CES	Circuit Emulation Service
CGA	Carrier Group Alarm
CIP	Carrier Identification Parameter
CIR	Committed Information Rate
CLIP	Classical IP
CLP	Cell Loss Priority
CLR	Cell Loss Ratio-1-15
CLS	Connectionless service
CMIP	Common Management Interface Protocol
CMR	Cell Misinsertion Rate
CPE	Customer Premise Equipment
CRA	Cell Rate Adaptation
CRC	Cyclic Redundancy Check
CRS	Cell Relay Service
CS	Controlled Slip, **or** Convergence Sublayer
CSU	Channel Service Unit
CTD	Cell Transfer Delay
CTS	Clear To Send
DACS	Digital Access and Cross-Connect System
DARPA	Defense Advanced Research Projects Agency
DCC	Data Country Code
DCE	Data Communications Equipment
DCS	Digital Cross-connect System
DES	Destination End Station
DFA	DXI Frame Address
DLCI	Data Link Connection Identifier

DNS	Domain Naming System
DSn	Digital Standard n (n=0, 1, 1C, 2, and 3)
DSR	Data Set Ready
DTE	Data Terminal Equipment
DTR	Data Terminal Ready
EEPROM	Electrically Erasable Programmable Read Only Memory
EFCI	Explicit Forward Congestion Indication
EGP	Exterior Gateway Protocol
EIA	Electronics Industries Association
EISA	Extended Industry Standard Architecture
ELAN	Emulated Local Area Network
EMI	Electromagnetic Interference
EPD	Early Packet Discard
EPROM	Erasable Programmable Read Only Memory
EQL	Equalization
ER	Explicit Rate
ES	End System, **or** Errored Second
ESF	Extended Super Frame
ESI	End System Identifier
EXZ	Excessive Zeroes (Error Event)
FC	Face Contact
FCC	Federal Communications Commission
FCS	Frame Check Sequence
FDDI	Fiber Distributed Data Interface
FDM	Frequency Division Multiplexing
FEBE	Far End Block Error
FEC	Forward Error Correction
FECN	Forward Explicit Congestion Notification
FERF	Far End Receive Failure
FIFO	First-In, First-Out
FRS	Frame-Relay Service
FTP	File Transfer Protocol
FT-PNNI	ForeThought PNNI
FUNI	Frame-Based UNI
GCAC	Generic Connection Admission Control
GCRA	Generic Cell Rate Algorithm
GFC	Generic Flow Control
HDB3	High Density Bipolar
HDLC	High Level Data Link Control
HEC	Header Error Control
HIPPI	High Performance Parallel Interface
HSSI	High-Speed Serial Interface

ICMP	Internet Control Message Protocol
IDU	Interface Data Unit
IEEE	Institute of Electrical and Electronics Engineers
IETF	Internet Engineering Task Force
ILMI	Interim Local Management Interface
IP	Internet Protocol
IPX	Internetwork Packet Exchange
IS	Intermediate system
ISDN	Integrated Services Digital Network
ISO	International Standards Organization
ITU-T	International Telecommunication Union Telecommunication
IWF	Interworking Function
IXC	Interexchange Carriers
JPEG	Joint Photographic Experts Group
Kbps	Kilobits per second
LAN	Local Area Network
LANE	LAN Emulation
LAPB	Link Access Procedure, Balanced
LATA	Local Access and Transport Area
LBO	Line Build Out
LCV	Line Code Violations
LE_ARP	LAN Emulation Address Resolution Protocol
LEC	LAN Emulation Client
LECS	LAN Emulation Configuration Server
LES	LAN Emulation Server
LLC	Logical Link Control
LOF	Loss Of Frame
LOP	Loss Of Pointer
LOS	Loss Of Signal
LSB	Least Significant Bit
MAC	Media Access Control
MAN	Metropolitan Area Network
MAU	Media Attachment Unit
MBS	Maximum Burst Size
MCDV	Maximum Cell Delay Variance
MCLR	Maximum Cell Loss Ratio
MCR	Minimum Cell Rate
MCTD	Maximum Cell Transfer Delay
MIB	Management Information Base
MIC	Media Interface Connector
MID	Message Identifier
MMF	Multimode Fiber Optic Cable
MPEG	Motion Picture Experts Group

MPOA	Multiprotocol over ATM
MSB	Most Significant Bit
MTU	Maximum Transmission Unit
NM	Network Management Entity
NML	Network Management Layer
NMS	Network Management Station
NNI	Network-to-Network Interface or Network Node Interface
NPC	Network Parameter Control
NRZ	Non Return to Zero
NRZI	Non Return to Zero Inverted
NSAP	Network Service Access Point
NTSC	National TV Standards Committee
OAM	Operation and Maintenance Cell
OC-n	Optical Carrier level-n
OID	Object Identifier
OOF	Out-of-Frame
OSI	Open Systems Interconnection
OSPF	Open Shortest Path First Protocol
OUI	Organizationally Unique Identifier
PAD	Packet Assembler Disassembler
PAL	Phase Alternate Line
PBX	Private Branch Exchange
PCI	Peripheral Component Interconnect
PCM	Pulse Code Modulation
PCR	Peak Cell Rate
PDN	Public Data Network
PDU	Protocol Data Unit
PHY	Physical Layer
ping	Packet Internet Groper
PLCP	Physical Layer Convergence Protocol
PLP	Packet Level Protocol
PM	Physical Medium
PMD	Physical Medium Dependent
PNNI	Private Network Node Interface or Private Network-to-Network Interface
PPD	Partial Packet Discard
PPP	Point-to-Point Protocol
PROM	Programmable Read-Only Memory
PRS	Primary Reference Source
PSN	Packet Switched Network
PT	Payload Type
PVC	Permanent Virtual Circuit (or Channel)
PVCC	Permanent Virtual Channel Connection
PVPC	Permanent Virtual Path Connection

QD	Queuing Delay
QoS	Quality of Service
RD	Routing Domain
RFCs	Requests For Comment
RFI	Radio Frequency Interference
RIP	Routing Information Protocol
RISC	Reduced Instruction Set Computer
RTS	Request To Send
SA	Source Address
SA	Source MAC Address
SAP	Service Access Point
SAR	Segmentation And Reassembly
SC	Structured Cabling, **or** Structured Connectors, **or** Stick and Click
SCR	Sustainable Cell Rate
SCSI	Small Computer Systems Interface
SDLC	Synchronous Data Link Control
SDU	Service Data Unit
SEAL	Simple and Efficient Adaptation Layer
SECAM	Systeme En Coleur Avec Memoire
SEL	Selector
SES	Severely Errored Seconds
SF	Super Frame
SGMP	Simple Gateway Management Protocol
SIR	Sustained Information Rate
SLIP	Serial Line IP
SMDS	Switched Multimegabit Data Service
SMF	Single Mode Fiber
SMTP	Simple Mail Transfer Protocol
SNA	Systems Network Architecture
SNAP	SubNetwork Access Protocol
SNI	Subscriber Network Interface
SNMP	Simple Network Management Protocol
SONET	Synchronous Optical Network
SPANS	Simple Protocol for ATM Network Signalling
SPARC	Scalable Processor Architecture Reduced instruction set Computer
SPE	Synchronous Payload Envelope
SPVC	Smart PVC
SS7	Signaling System No. 7
SSCOP	Service Specific Connection Oriented Protocol
SSCS	Service Specific Convergence Sublayer

ST	Straight Tip, **or** Stick and Turn
STM	Synchronous Transfer Mode
STP	Shielded Twisted Pair, Spanning Tree Protocol
STS	Synchronous Transport Signal
SVC	Switched Virtual Circuit (or Channel)
SVCC	Switched Virtual Channel Connection
SVPC	Switched Virtual Path Connection
TAXI	Transparent Asynchronous Transmitter / Receiver Interface
TC	Transmission Convergence
TCP	Transmission Control Protocol
TCP/IP	Transmission Control Protocol / Internet Protocol
TCR	Tagged Cell Rate
TCS	Transmission Convergence Sublayer
TDM	Time Division Multiplexing
TE	Terminal Equipment
TFTP	Trivial File Transfer Protocol
TM	Traffic Management
UAS	Unavailable Seconds
UBR	Unspecified Bit Rate
UDP	User Datagram Protocol
UNI	User-to-Network Interface
UPC	Usage Parameter Control
UTOPIA	Universal Test & Operations Interface for ATM
UTP	Unshielded Twisted Pair
VBR	Variable Bit Rate
VC	Virtual Channel (or Circuit)
VCC	Virtual Channel Connection
VCI	Virtual Channel Identifier
VCL	Virtual Channel Link
VINES	Virtual Network Software
VLAN	Virtual Local Area Network
VP	Virtual Path
VPC	Virtual Path Connection
VPDN	Virtual Private Data Network
VPI	Virtual Path Identifier
VPL	Virtual Path Link
VPN	Virtual Private Network
VPT	Virtual Path Terminator
VS/VD	Virtual Source / Virtual Destination
VT	Virtual Tributary
WAN	Wide-Area Network
ZBTSI	Zero Byte Time Slot Interchange

Glossary

10Base-T - a 10 Mbps baseband Ethernet specification utilizing twisted-pair cabling (Category 3, 4, or 5). 10BaseT, which is part of the IEEE 802.3 specification, has a distance limit of approximately 100 meters per segment.

802.1d Spanning Tree Bridging - the IEEE standard for bridging; a MAC layer standard for transparently connecting two or more LANs (often called subnetworks) that are running the same protocols and cabling. This arrangement creates an extended network, in which any two workstations on the linked LANs can share data.

802.3 Ethernet - the IEEE standard for Ethernet; a physical-layer standard that uses the CSMA / CD access method on a bus-topology LAN.

802.5 Token Ring - the IEEE physical-layer standard that uses the token-passing access method on a ring-topology LAN.

AAL Connection - an association established by the AAL between two or more next higher layer entities.

Adapter - A fitting that supplies a passage between two sets of equipment when they cannot be directly interconnected.

Adaptive Differential Pulse Code Modulation (ADPCM) - A technique that allows analog voice signals to be carried on a 32K bps digital channel. Sampling is done at 8Hz with 4 bits used to describe the difference between adjacent samples.

Adaptive Pulse Code Modulation (APCM) - A technique that effectively reduces occupied bandwidth per active speaker by reducing sampling rates during periods of overflow peak traffic.

Address - A unique identity of each network station on a LAN or WAN.

Address Complete Message (ACM) - A B-ISUP call control message from the receiving exchange to sending exchange indicating the completion of address information.

Address Mask - a bit mask used to identify which bits in an address (usually an IP address) are network significant, subnet significant, and host significant portions of the complete address. This mask is also known as the subnet mask because the subnetwork portion of the address can be determined by comparing the binary version of the mask to an IP address in that subnet. The mask holds the same number of bits as the protocol address it references.

Address Prefix - A string of 0 or more bits up to a maximum of 152 bits that is the lead portion of one or more ATM addresses.

Address Resolution - The procedure by which a client associates a LAN destination with the ATM address of another client or the BUS.

Address Resolution Protocol (ARP) - a method used to resolve higher level protocol addressing (such as IP) into the appropriate header data required for ATM; i.e., port, VPI, and VCI; also defines the AAL type to be used.

Agent - a component of network- and desktop-management software, such as SNMP, that gathers information from MIBs.

alarm - an unsolicited message from a device, typically indicating a problem with the system that requires attention.

Alarm Indication Signal (AIS) - In T1, an all ones condition used to alert a receiver that its incoming signal (or frame) has been lost. The loss of signal or frame is detected at the receiving end, and the failed signal is replaced by all the ones condition which the receiver interprets as an AIS. The normal response to this is AIS is for the receiving end to generate a yellow alarm signal as part of its transmission towards the faulty end. (The AIS itself is sometimes called a Blue Signal).

A-Law - The PCM coding and companding standard used in Europe.

Allowable Cell Rate (ACR) - parameter defined by the ATM Forum for ATM traffic management. ACR varies between the MCR and the PCR, and is dynamically controlled using congestion control mechanisms.

Alternate Mark Inversion (AMI) - A line coding format used on T1 facilities that transmits ones by alternate positive and negative pulses.

Alternate Routing - A mechanism that supports the use of a new path after an attempt to set up a connection along a previously selected path fails.

American National Standards Institute (ANSI) - a private organization that coordinates the setting and approval of some U.S. standards. It also represents the United States to the International Standards Organization.

American Standard Code for Information Interchange (ASCII) - a standard character set that (typically) assigns a 7-bit sequence to each letter, number, and selected control characters.

AppleTalk - a networking protocol developed by Apple Computer for communication between Apple's products and other computers. Independent of the network layer, AppleTalk runs on LocalTalk, EtherTalk and TokenTalk.

Application Layer - Layer seven of the ISO reference model; provides the end-user interface.

Application Program (APP) - a complete, self-contained program that performs a specific function directly for the user.

Application Program Interface (API) - a language format that defines how a program can be made to interact with another program, service, or other software; it allows users to develop custom interfaces with FORE products.

Assigned Cell - a cell that provides a service to an upper layer entity or ATM Layer Management entity (ATMM-entity).

asxmon - a FORE program that repeatedly displays the state of the switch and its active ports.

Asynchronous Time Division Multiplexing (ATDM) - a multiplexing technique in which a transmission capability is organized into a priori, unassigned time slots. The time slots are assigned to cells upon request of each application's instantaneous real need.

Asynchronous Transfer Mode (ATM) - a transfer mode in which the information is organized into cells. It is asynchronous in the sense that the recurrence of cells containing information from an individual user is not necessarily periodic.

ATM Adaptation Layer (AAL) - the AAL divides user information into segments suitable for packaging into a series of ATM cells. AAL layer types are used as follows:

AAL-1 - constant bit rate, time-dependent traffic such as voice and video
AAL-2 - still undefined; a placeholder for variable bit rate video transmission
AAL-3/4 - variable bit rate, delay-tolerant data traffic requiring some sequencing and/or error detection support (originally two AAL types, connection-oriented and connectionless, which have been combined)
AAL-5 - variable bit rate, delay-tolerant, connection-oriented data traffic requiring minimal sequencing or error detection support

ATM Address - Defined in the UNI Specification as 3 formats, each having 20 bytes in length.

ATM Forum - an international non-profit organization formed with the objective of accelerating the use of ATM products and services through a rapid convergence of interoperability specifications. In addition, the Forum promotes industry cooperation and awareness.

ATM Inverse Multiplexing (AIMUX) - A device that allows multiple T1 or E1 communications facilities to be combined into a single broadband facility for the transmission of ATM cells.

ATM Layer link - a section of an ATM Layer connection between two adjacent active ATM Layer entities (ATM-entities).

ATM Link - a virtual path link (VPL) or a virtual channel link (VCL).

ATM Management Interface (AMI) - the user interface to FORE Systems' *ForeThought* switch control software (SCS). AMI lets users monitor and change various operating configurations of FORE Systems switches and network module hardware and software, IP connectivity, and SNMP network management.

ATM Peer-to-Peer Connection - a virtual channel connection (VCC) or a virtual path connection (VPC) directly established, such as workstation-to-workstation. This setup is not commonly used in networks.

ATM Traffic Descriptor - a generic list of parameters that can be used to capture the intrinsic traffic characteristics of a requested ATM connection.

ATM User-to-User Connection - an association established by the ATM Layer to support communication between two or more ATM service users (i.e., between two or more next higher layer entities or between two or more ATM entities). The communication over an ATM Layer connection may be either bidirectional or unidirectional. The same Virtual Channel Identifier (VCI) is used for both directions of a connection at an interface.

atmarp - a FORE program that shows and manipulates ATM ARP entries maintained by the given device driver. This is also used to establish PVC connections.

ATM-attached Host Functional Group (AHFG) - The group of functions performed by an ATM-attached host that is participating in the MPOA service.

atmconfig - a FORE program used to enable or disable SPANS signalling.

atmstat - a FORE program that shows statistics gathered about a given adapter card by the device driver. These statistics include ATM layer and ATM adaptation layer cell and error counts. This can also be used to query other hosts via SNMP.

Attachment User Interface (AUI) - IEEE 802.3 interface between a media attachment unit (MAU) and a network interface card (NIC). The term AUI can also refer to the rear panel port to which an AUI cable might attach.

Auto-logout - a feature that automatically logs out a user if there has been no user interface activity for a specified length of time.

Automatic Protection Switching (APS) - Equipment installed in communications systems to detect circuit failures and automatically switch to redundant, standby equipment.

Available Bit Rate (ABR) - a type of traffic for which the ATM network attempts to meet that traffic's bandwidth requirements. It does not guarantee a specific amount of bandwidth and the end station must retransmit any information that did not reach the far end.

Backbone - the main connectivity device of a distributed system. All systems that have connectivity to the backbone connect to each other, but systems can set up private arrangements with each other to bypass the backbone to improve cost, performance, or security.

Backplane - High-speed communications line to which individual components are connected.

Backward Explicit Congestion Notification (BECN) - A Resource Management cell type generated by the network or the destination, indicating congestion or approaching congestion for traffic flowing in the direction opposite that of the BECN cell.

Bandwidth - usually identifies the capacity or amount of data that can be sent through a given circuit; may be user-specified in a PVC.

Baud - unit of signalling speed, equal to the number of discrete conditions or signal events per second. If each signal event represents only one bit, the baud rate is the same as bps; if each signal event represents more than one bit (such as a dibit), the baud rate is smaller than bps.

Bayonet-Neill-Concelman (BNC) - a bayonet-locking connector used to terminate coaxial cables. BNC is also referred to as Bayonet Network Connector.

Bipolar 8 Zero Substitution (B8ZS) - a technique used to satisfy the ones density requirements of digital T-carrier facilities in the public network while allowing 64 Kbps clear channel data. Strings of eight consecutive zeroes are replaced by an eight-bit code representing two intentional bipolar pulse code violations (000V10V1).

Bipolar Violation (BPV) - an error event on a line in which the normal pattern of alternating high (one) and low (zero) signals is disrupted. A bipolar violation is noted when two high signals occur without an intervening low signal, or vice versa.

B-ISDN Inter-Carrier Interface (B-ICI) - An ATM Forum defined specification for the interface between public ATM networks to support user services across multiple public carriers.

Bit Error Rate (BER) - A measure of transmission quality, generally shown as a negative exponent, (e.g., 10^{-7} which means 1 out of 10^{7} bits [1 out of 10,000,000 bits] are in error).

Bit Interleaved Parity (BIP) - an error-detection technique in which character bit patterns are forced into parity, so that the total number of one bits is always odd or always even. This is accomplished by the addition of a one or zero bit to each byte, as the byte is transmitted; at the other end of the transmission, the receiving device verifies the parity (odd or even) and the accuracy of the transmission.

Bit Robbing - The use of the least significant bit per channel in every sixth frame for signaling.

Bit Stuffing - A process in bit-oriented protocols where a zero is inserted into a string of ones by the sender to prevent the receiver from interpreting valid user data (the string of ones) as control characters (a Flag character for instance).

Border Gateway Protocol (BGP) - used by gateways in an internet connecting autonomous networks. It is derived from experiences learned using the EGP.

bps - bits per second

Bridge - a device that expands a Local Area Network by forwarding frames between data link layers associated with two separate cables, usually carrying a common protocol. Bridges can usually be made to filter certain packets (to forward only certain traffic).

Bridge Protocol Data Unit (BPDU) - A message type used by bridges to exchange management and control information.

Broadband - a service or system requiring transmission channels capable of supporting rates greater than the Integrated Services Digital Network (ISDN) primary rate.

Broadband Access - an ISDN access capable of supporting one or more broadband services.

Broadband Connection Oriented Bearer (BCOB) - Information in the SETUP message that indicates the type of service requested by the calling user.

BCOB-A (Bearer Class A) - Indicated by ATM end user in SETUP message for connection-oriented, constant bit rate service. The network may perform internetworking based on AAL information element (IE).

BCOB-C (Bearer Class C) - Indicated by ATM end user in SETUP message for connection-oriented, variable bit rate service. The network may perform internetworking based on AAL information element (IE).

BCOB-X (Bearer Class X) - Indicated by ATM end user in SETUP message for ATM transport service where AAL, traffic type and timing requirements are transparent to the network.

Broadband Integrated Services Digital Network (B-ISDN) - a common digital network suitable for voice, video, and high-speed data services running at rates beginning at 155 Mbps.

Broadband ISDN User's Part (B-ISUP) - A protocol used to establish, maintain and release broadband switched network connections across an SS7 / ATM network.

Broadband Terminal Equipment (B-TE) - An equipment category for B-ISDN which includes terminal adapters and terminals.

Broadcast - Data transmission to all addresses or functions.

Broadcast and Unknown Server (BUS) - in an emulated LAN, the BUS is responsible for accepting broadcast, multicast, and unknown unicast packets from the LECs to the broadcast MAC address (FFFFFFFFFFFF) via dedicated point-to-point connections, and forwarding the packets to all of the members of the ELAN using a single point-to-multipoint connection.

Brouter (bridging/router) - a device that routes some protocols and bridges others based on configuration information.

Buffer - A data storage medium used to compensate of a difference in rate of data flow or time of occurrence of events when transmitting data from one device to another.

Building Integrated Timing Supply (BITS) - a master timing supply for an entire building, which is a master clock and its ancillary equipment. The BITS supplies DS1 and / or composite clock timing references for synchronization to all other clocks and timing sources in that building.

Bursty Errored Seconds (BES) - a BES contains more than 1 and fewer than 320 path coding violation error events, and no severely errored frame or AIS defects. Controlled slips are not included in determining BESs.

Bursty Second - a second during which there were at least the set number of BES threshold event errors but fewer than the set number of SES threshold event errors.

Byte - A computer-readable group of bits (normally 8 bits in length).

Call - an association between two or more users or between a user and a network entity that is established by the use of network capabilities. This association may have zero or more connections.

Carrier - a company, such as any of the "baby Bell" companies, that provide network communications services, either within a local area or between local areas.

Carrier Group Alarm (CGA) - A service alarm generated by a channel bank when an out-of-frame (OOF) condition exists for some predetermined length of time (generally 300 milliseconds to 2.5 seconds). The alarm causes the calls using a trunk to be dropped and trunk conditioning to be applied.

Carrier Identification Parameter (CIP) - A 3 or 4 digit code in the initial address message identifying the carrier to be used for the connection.

cchan - a FORE program that manages virtual channels on a FORE switch running `asxd`.

Cell - an ATM Layer protocol data unit (PDU). The basic unit of information transported in ATM technology, each 53-byte cell contains a 5-byte header and a 48-byte payload.

Cell Delay Variation (CDV) - a quantification of cell clumping for a connection. The cell clumping CDV (yk) is defined as the difference between a cell's expected reference arrival time (ck) and its actual arrival time (ak). The expected reference arrival time (ck) of cell k of a specific connection is max. T is the reciprocal of the negotiated peak cell rate.

Cell Delineation - the protocol for recognizing the beginning and end of ATM cells within the raw serial bit stream.

Cell Header - ATM Layer protocol control information.

Cell Loss Priority (CLP) - the last bit of byte four in an ATM cell header; indicates the eligibility of the cell for discard by the network under congested conditions. If the bit is set to 1, the cell may be discarded by the network depending on traffic conditions.

Cell Loss Ratio - In a network, cell loss ratio is (1-x/y), where y is the number of cells that arrive in an interval at an ingress of the network; and x is the number of these y cells that leave at the egress of the network element.

Cell Loss Ratio (CLR) - CLR is a negotiated QoS parameter and acceptable values are network specific. The objective is to minimize CLR provided the end-system adapts the traffic to the changing ATM layer transfer characteristics. The Cell Loss Ratio is defined for a connection as: Lost Cells/Total Transmitted Cells. The CLR parameter is the value of CLR that the network agrees to offer as an objective over the lifetime of the connection. It is expressed as an order of magnitude, having a range of 10-1 to 10-15 and unspecified.

Cell Misinsertion Rate (CMR) - the ratio of cells received at an endpoint that were not originally transmitted by the source end in relation to the total number of cells properly transmitted.

Cell Rate Adaptation (CRA) - a function performed by a protocol module in which empty cells (known as unassigned cells) are added to the output stream. This is because there always must be a fixed number of cells in the output direction; when there are not enough cells to transmit, unassigned cells are added to the output data stream.

Cell Relay Service (CRS) - a carrier service which supports the receipt and transmission of ATM cells between end users in compliance with ATM standards and implementation specifications.

Cell Transfer Delay - the transit delay of an ATM cell successfully passed between two designated boundaries. See CTD.

Cell Transfer Delay (CTD) - This is defined as the elapsed time between a cell exit event at the measurement point 1 (e.g., at the source UNI) and the corresponding cell entry event at the measurement point 2 (e.g., the destination UNI) for a particular connection. The cell transfer delay between two measurement points is the sum of the total inter-ATM node transmission delay and the total ATM node processing delay.

Channel - A path or circuit along which information flows.

Channel Associated Signaling (CAS) - a form of circuit state signaling in which the circuit state is indicated by one or more bits of signaling status sent repetitively and associated with that specific circuit.

Channel Bank - A device that multiplexes many slow speed voice or data conversations onto high speed link and controls the flow.

Channel Service Unit (CSU) - An interface for digital leased lines which performs loopback testing and line conditioning.

Channelization - capability of transmitting independent signals together over a cable while still maintaining their separate identity for later separation.

Circuit - A communications link between points.

Circuit Emulation Service (CES) - The ATM Forum circuit emulation service interoperability specification specifies interoperability agreements for supporting Constant Bit Rate (CBR) traffic over ATM networks that comply with the other ATM Forum interoperability agreements. Specifically, this specification supports emulation of existing TDM circuits over ATM networks.

Classical IP (CLIP) - IP over ATM which conforms to RFC 1577.

Clear to Send (CTS) - and RS-232 modem interface control signal (sent from the modem to the DTE on pin 5) which indicates that the attached DTE may begin transmitting; issuance in response to the DTE's RTS.

Clocking - Regularly timed impulses.

Closed User Group - A subgroup of network users that can be its own entity; any member of the subgroup can only communicate with other members of that subgroup.

Coaxial Cable - Coax is a type of electrical communications medium used in the LAN environment. This cable consists of an outer conductor concentric to an inner conductor, separated from each other by insulating material, and covered by some protective outer material. This medium offers large bandwidth, supporting high data rates with high immunity to electrical interference and a low incidence of errors. Coax is subject to distance limitations and is relatively expensive and difficult to install.

Cold Start Trap - an SNMP trap which is sent after a power-cycle (see *trap*).

Collision - Overlapping transmissions that occur when two or more nodes on a LAN attempt to transmit at or about the same time.

Committed Information Rate (CIR) - CIR is the information transfer rate which a network offering Frame Relay Services (FRS) is committed to transfer under normal conditions. The rate is averaged over a minimum increment of time.

Common Channel Signaling (CCS) - A form signaling in which a group of circuits share a signaling channel. Refer to SS7.

Common Management Interface Protocol (CMIP) - An ITU-TSS standard for the message formats and procedures used to exchange management information in order to operate, administer maintain and provision a network.

Concatenation - The connection of transmission channels similar to a chain.

Concentrator - a communications device that offers the ability to concentrate many lower-speed channels into and out of one or more high-speed channels.

Configuration - The phase in which the LE Client discovers the LE Service.

Congestion Management - traffic management feature that helps ensure reasonable service for VBR connections in an ATM network, based on a priority, sustained cell rate (SCR), and peak cell rate (PCR). During times of congestion, bandwidth is reduced to the SCR, based on the priority of the connection.

Connection - the concatenation of ATM Layer links in order to provide an end-to-end information transfer capability to access points.

Connection Admission Control (CAC) - the procedure used to decide if a request for an ATM connection can be accepted based on the attributes of both the requested connection and the existing connections.

Connection Endpoint (CE) - a terminator at one end of a layer connection within a SAP.

Connection Endpoint Identifier (CEI) - an identifier of a CE that can be used to identify the connection at a SAP.

Connectionless Broadband Data Service (CBDS) - A connectionless service similar to Bellcore's SMDS defined by European Telecommunications Standards Institute (ETSI).

Connectionless Service - a type of service in which no pre-determined path or link has been established for transfer of information, supported by AAL 4.

Connectionless Service (CLS) - A service which allows the transfer of information among service subscribers without the need for end-to- end establishment procedures.

Connection-Oriented Service - a type of service in which information always traverses the same pre-established path or link between two points, supported by AAL 3.

Constant Bit Rate (CBR) - a type of traffic that requires a continuous, specific amount of bandwidth over the ATM network (e.g., digital information such as video and digitized voice).

Controlled Slip (CS) - a situation in which one frame's worth of data is either lost or replicated. A controlled slip typically occurs when the sending device and receiving device are not using the same clock.

Convergence Sublayer (CS) - a portion of the AAL. Data is passed first to the CS where it is divided into rational, fixed-length packets or PDUs (Protocol Data Units). For example, AAL 4 processes user data into blocks that are a maximum of 64 kbytes long.

Corresponding Entities - peer entities with a lower layer connection among them.

cpath - a FORE program used to manage virtual paths on a FORE switch running asxd.

cport - a FORE program that monitors and changes the state of ports on a FORE switch running `asxd`.

Cross Connection - a mapping between two channels or paths at a network device.

Customer Premise Equipment (CPE) - equipment that is on the customer side of the point of demarcation, as opposed to equipment that is on a carrier side. See also point of demarcation.

Cut Through - Establishment of a complete path for signaling and/or audio communications.

Cyclic Redundancy Check (CRC) - an error detection scheme in which a number is derived from the data that will be transmitted. By recalculating the CRC at the remote end and comparing it to the value originally transmitted, the receiving node can detect errors.

D3/D4 - Refers to compliance with AT&T TR (Technical Reference) 62411 definitions for coding, supervision, and alarm support. D3/D4 compatibility ensures support of digital PBXes, M24 services, Megacom services, and Mode 3 D3/D4 channel banks at DS-1 level.

D4 Channelization - refers to compliance with AT&T Technical Reference 62411 regarding DS1 frame layout (the sequential assignment of channels and time slot numbers within the DS1).

D4 Framed/Framing Format - in T1, a 193-bit frame format in which the 193rd bit is used for framing and signaling information (the frame/framing bit). To be considered in support of D4 Framing, a device must be able to synchronize and frame-up on the 193rd bit.

Data Communications Equipment (DCE) - a definition in the RS232C standard that describes the functions of the signals and the physical characteristics of an interface for a communication device such as a modem.

Data Country Code (DCC) - This specifies the country in which an address is registered. The codes are given in ISO 3166. The length of this field is two octets. The digits of the data country code are encoded in Binary Coded Decimal (BCD) syntax. The codes will be left justified and padded on the right with the hexadecimal value “F” to fill the two octets.

Data Link - Communications connection used to transmit data from a source to a destination.

Data Link Connection Identifier (DLCI) - connection identifier associated with frame relay packets that serves the same functions as, and translates directly to, the VPI/VCI on an ATM cell.

Data Link Layer - Layer 2 of the OSI model, responsible for encoding data and passing it to the physical medium. The IEEE divides this layer into the LLC (Logical Link Control) and MAC (Media Access Control) sublayers.

Data Set Ready (DSR) - an RS-232 modem interface control signal (sent from the modem to the DTE on pin 6) which indicates that the modem is connected to the telephone circuit. Usually a prerequisite to the DTE issuing RTS.

Data Terminal Equipment (DTE) - generally user devices, such as terminals and computers, that connect to data circuit-terminating equipment. They either generate or receive the data carried by the network.

Data Terminal Ready (DTR) - an RS232 modem interface control signal (sent from the DTE to the modem on pin 20) which indicates that the DTE is ready for data transmission and which requests that the modem be connected to the telephone circuit.

Datagram - a packet of information used in a connectionless network service that is routed to its destination using an address included in the datagram's header.

DECnet - Digital Equipment Corporation's proprietary LAN.

Defense Advanced Research Projects Agency (DARPA) - the US government agency that funded the ARPANET.

Demultiplexing - a function performed by a layer entity that identifies and separates SDUs from a single connection to more than one connection (see *multiplexing*).

Destination End Station (DES) - An ATM termination point which is the destination for ATM messages of a connection and is used as a reference point for ABR services. See SES.

Digital Access and Cross-Connect System (DACS) - Digital switching system for routing T1 lines, and DS-0 portions of lines, among multiple T1 ports.

Digital Cross-connect System (DCS) - an electronic patch panel used to route digital signals in a central office.

Digital Standard n (0, 1, 1C, 2, and 3) (DSn) - a method defining the rate and format of digital hierarchy, with asynchronous data rates defined as follows:

DS0	64kb / s	1 voice channel
DS1	1.544Mb / s	24 DS0s
DS1C	3.152 Mb / s	2 DS1s
DS2	6.312 Mb / s	4 DS1s
DS3	44.736 Mb / s	28 DS1s

Synchronous data rates (SONET) are defined as:

STS-1 / OC-1	51.84 Mb / s	28 DS1s or 1 DS3
STS-3 / OC-3	155.52 Mb / s	3 STS-1s byte interleaved
STS-3c / OC-3c	155.52 Mb / s	Concatenated, indivisible payload
STS-12 / OC-12	622.08 Mb / s	12 STS-1s, 4 STS-3cs, or any mixture
STS-12c / OC-12c	622.08 Mb / s	Concatenated, indivisible payload
STS-48 / OC-48	2488.32 Mb / s	48 STS-1s, 16 STS-3cs, or any mixture

DIP (Dual In-line Package) Switch - a device that has two parallel rows of contacts that let the user switch electrical current through a pair of those contacts to on or off. They are used to reconfigure components and peripherals.

Domain Name Server - a computer that converts names to their corresponding Internet numbers. It allows users to telnet or FTP to the name instead of the number.

Domain Naming System (DNS) - the distributed name and address mechanism used in the Internet.

Duplex - Two way communication.

DXI - a generic phrase used in the full names of several protocols, all commonly used to allow a pair of DCE and DTE devices to share the implementation of a particular WAN protocol. The protocols define the packet formats used to transport data between DCE and DTE devices.

DXI Frame Address (DFA) - a connection identifier associated with ATM DXI packets that serves the same functions as, and translates directly to, the VPI/VCI on an ATM cell.

Dynamic Allocation - A technique in which the resources assigned for program execution are determined by criteria applied at the moment of need.

E.164 - A public network addressing standard utilizing up to a maximum of 15 digits. ATM uses E.164 addressing for public network addressing.

E1 - Wide-area digital transmission scheme used predominantly in Europe that carries data at a rate of 2.048 Mbps. E1 lines can be leased for private use from common carriers.

E3 - Wide-area digital transmission scheme used predominantly in Europe that carries data at a rate of 34.368 Mbps. E3 lines can be leased for private use from common carriers.

Early Packet Discard - A mechanism that allows a complete AAL5 frame to be discarded when a threshold condition is met (e.g., one indicating imminent congestion). EPD helps to avoid congestion that jeopardizes a switch's ability to support existing connections with a guaranteed service.

Edge Device - A physical device which is capable of forwarding packets between legacy interworking interfaces (e.g., Ethernet, Token Ring, etc.) and ATM interfaces based on data-link and network layer information but which does not participate in the running of any network layer routing protocol. An Edge Device obtains forwarding descriptions using the route distribution protocol.

elarp - a FORE program that shows and manipulates MAC and ATM address mappings for LAN Emulation Clients (LECs).

elconfig - a FORE program that shows and modifies LEC configuration. Lets the user set the NSAP address of the LAN Emulation Configuration Server, display the list of Emulated LANs configured in the LECS for this host, display the list of ELANs locally configured along with the membership state of each, and locally administer ELAN membership.

Electrically Erasable Programmable Read Only Memory (EEPROM) - an EPROM that can be cleared with electrical signals rather than the traditional ultraviolet light.

Electromagnetic Interference (EMI) - signals generated and radiated by an electronic device that cause interference with radio communications, among other effects.

Electronics Industries Association (EIA) - a USA trade organization that issues its own standards and contributes to ANSI; developed RS-232. Membership includes USA manufacturers.

Embedded SNMP Agent - an SNMP agent can come in two forms: embedded or proxy. An embedded SNMP agent is integrated into the physical hardware and software of the unit.

Emulated Local Area Network (ELAN) - A logical network initiated by using the mechanisms defined by LAN Emulation. This could include ATM and legacy attached end stations.

End System (ES) - a system where an ATM connection is terminated or initiated (an originating end system initiates the connection; a terminating end system terminates the connection).

End System Identifier (ESI) - This identifier distinguishes multiple nodes at the same level in case the lower level peer group is partitioned.

End-to-End Connection - when used in reference to an ATM network, a connection that travels through an ATM network, passing through various ATM devices and with endpoints at the termination of the ATM network.

Enterprise - Terminology generally referring to customers with multiple, non-contiguous geographic locations.

Equalization (EQL) - the process of compensating for line distortions.

Erasable Programmable Read Only Memory (EPROM) - A PROM which may be erased and rewritten to perform new or different functions (normally done with a PROM burner).

Errored Second (ES) - a second during which at least one code violation occurred.

Ethernet - a 10-Mbps, coaxial standard for LANs in which all nodes connect to the cable where they contend for access.

Excessive Zeroes (EXZ) Error Event - An Excessive Zeroes error event for an AMI-coded signal is the occurrence of more than fifteen contiguous zeroes. For a B8ZS coded signal, the defect occurs when more than seven contiguous zeroes are detected.

Explicit Forward Congestion Indication (EFCI) - the second bit of the payload type field in the header of an ATM cell, the EFCI bit indicates network congestion to receiving hosts. On a congested switch, the EFCI bit is set to “1” by the transmitting network module when a certain number of cells have accumulated in the network module's shared memory buffer. When a cell is received that has its EFCI bit set to “1,” the receiving host notifies the sending host, which should then reduce its transmission rate.

Explicit Rate (ER) - The Explicit Rate is an RM-cell field used to limit the source ACR to a specific value. It is initially set by the source to a requested rate (such as PCR). It may be subsequently reduced by any network element in the path to a value that the element can sustain. ER is formatted as a rate.

Extended Industry Standard Architecture (EISA) - bus architecture for desktop computers that provides a 32-bit data passage and maintains compatibility with the ISA or AT architecture.

Extended Super Frame (ESF) - a T1 framing format that utilizes the 193rd bit as a framing bit, but whose Superframe is made up of 24 frames instead of 12 as in D4 format. ESF also provides CRC error detection and maintenance data link functions.

Exterior Gateway Protocol (EGP) - used by gateways in an internet, connecting autonomous networks.

Fairness - related to Generic Flow Control, fairness is defined as meeting all of the agreed quality of service requirements by controlling the order of service for all active connections.

Far End Block Error (FEBE) - an error detected by extracting the 4-bit FEBE field from the path status byte (G1). The legal range for the 4-bit field is between 0000 and 1000, representing zero to eight errors. Any other value is interpreted as zero errors.

Far End Receive Failure (FERF) - a line error asserted when a 110 binary pattern is detected in bits 6, 7, 8 of the K2 byte for five consecutive frames. A line FERF is removed when any pattern other than 110 is detected in these bits for five consecutive frames.

Far-End - in a relationship between two devices in a circuit, the far-end device is the one that is remote.

Face Contact (FC) - Designation for fiber optic connector designed by Nippon Telegraph and Telephone which features a movable anti-rotation key allowing good repeatable performance despite numerous mating. Normally referred to as Fiber Connector, FC actually stands for Face Contact and sometimes linked with PC (Point Contact), designated as FC or FC-PC.

FCC Part 68 - The FCC rules regulating the direct connection of non-telephone company provided equipment to the public telephone network.

Federal Communications Commission (FCC) - a board of commissioners appointed by the President under the Communications Act of 1934, with the authority to regulate all interstate telecommunications originating in the United States, including transmission over phone lines.

Fiber Distributed Data Interface (FDDI) - high-speed data network that uses fiber-optic as the physical medium. Operates in similar manner to Ethernet or Token Ring, only faster.

File Transfer Protocol (FTP) - a TCP/IP protocol that lets a user on one computer access, and transfer data to and from, another computer over a network. ftp is usually the name of the program the user invokes to accomplish this task.

First-In, First-Out (FIFO) - method of coordinating the sequential flow of data through a buffer.

Flag - a bit pattern of six binary “1”s bounded by a binary “0” at each end (forms a 0111 1110 or Hex “7E”). It is used to mark the beginning and/or end of a frame.

Flow Control - The way in which information is controlled in a network to prevent loss of data when the receiving buffer is near its capacity.

***ForeThought* PNNI (FT-PNNI) -** a FORE Systems routing and signalling protocol that uses private ATM (NSAP) addresses; a precursor to ATM Forum PNNI (see PNNI).

Forward Error Correction (FEC) - A technique used by a receiver for correcting errors incurred in transmission over a communications channel without requiring retransmission of any information by the transmitter; typically involves a convolution of the transmitted bits and the appending of extra bits by both the receiver and transmitter using a common algorithm.

Forward Explicit Congestion Notification (FECN) - Bit set by a Frame Relay network to inform data terminal equipment (DTE) receiving the frame that congestion was experienced in the path from source to destination. DTE receiving frames with the FECN bit set can request that higher-level protocols take flow control action as appropriate.

Fractional T1 - the use of bandwidth in 64Kbps increments up to 1.544Mbps from a T1 facility.

Frame - a variable length group of data bits with a specific format containing flags at the beginning and end to provide demarcation.

Frame Check Sequence (FCS) - In bit-oriented protocols, a 16-bit field that contains transmission error checking information, usually appended to the end of the frame.

Frame Relay - a fast packet switching protocol based on the LAPD protocol of ISDN that performs routing and transfer with less overhead processing than X.25.

Frame Synchronization Error - an error in which one or more time slot framing bits are in error.

Frame-Based UNI (FUNI) - An ATM switch-based interface which accepts frame-based ATM traffic and converts it into cells.

Frame-Relay Service (FRS) - A connection oriented service that is capable of carrying up to 4096 bytes per frame.

Framing - a protocol that separates incoming bits into identifiable groups so that the receiving multiplexer recognizes the grouping.

Frequency Division Multiplexing (FDM) - a method of dividing an available frequency range into parts with each having enough bandwidth to carry one channel.

Gbps - gigabits per second (billion)

Generic Cell Rate Algorithm (GCRA) - an algorithm which is employed in traffic policing and is part of the user / network service contract. The GCRA is a scheduling algorithm which ensures that cells are marked as conforming when they arrive when expected or later than expected and non-conforming when they arrive sooner than expected.

Generic Connection Admission Control (GCAC) - This is a process to determine if a link has potentially enough resources to support a connection.

Generic Flow Control (GFC) - the first four bits of the first byte in an ATM cell header. Used to control the flow of traffic across the User-to-Network Interface (UNI), and thus into the network. Exact mechanisms for flow control are still under investigation and no explicit definition for this field exists at this time. (This field is used only at the UNI; for NNI-NNI use (between network nodes), these four bits provide additional network address capacity, and are appended to the VPI field.)

GIO - a proprietary bus architecture used in certain Silicon Graphics, Inc. workstations.

Header - protocol control information located at the beginning of a protocol data unit.

Header Error Control (HEC) - a CRC code located in the last byte of an ATM cell header that is used for checking cell header integrity only.

High Density Bipolar (HDB3) - A bipolar coding method that does not allow more than 3 consecutive zeroes.

High Level Data Link Control (HDLC) - An ITU-TSS link layer protocol standard for point-to-point and multi-point communications.

High Performance Parallel Interface (HIPPI) - ANSI standard that extends the computer bus over fairly short distances at speeds of 800 and 1600 Mbps.

High-Speed Serial Interface (HSSI) - a serial communications connection that operates at speeds of up to 1.544 Mbps.

Host - In a network, the primary or controlling computer in a multiple computer installation.

HPUX - the Hewlett-Packard version of UNIX.

Hub - a device that connects several other devices, usually in a star topology.

I/O Module - FORE's interface cards for the LAX-20 LAN Access Switch, designed to connect Ethernet, Token Ring, and FDDI LANs to FORE ATM networks.

Institute of Electrical and Electronics Engineers (IEEE) - the world's largest technical professional society. Based in the U.S., the IEEE sponsors technical conferences, symposia & local meetings worldwide, publishes nearly 25% of the world's technical papers in electrical, electronics & computer engineering, provides educational programs for members, and promotes standardization.

IEEE 802 - Standards for the interconnection of LAN computer equipment. Deals with the Data Link Layers of the ISO Reference Model for OSI.
IEEE 802.1 - Defines the high-level network interfaces such as architecture, internetworking and network management.
IEEE 802.2 - Defines the Logical Link Control interface between the Data Link and Network Layers.
IEEE 802.3 - Defines CSMA / CD (Ethernet).
IEEE 802.4 - Defines the token-passing bus.
IEEE 802.5 - Defines the Token Ring access methodology. This standard incorporates IBM's Token Ring specifications.
IEEE 802.6 - Defines Metropolitan Area Networks.
IEEE 802.7 - The broadband technical advisory group.
IEEE 802.8 - The fiber optics technical advisory group.
IEEE 802.9 - Defines integrated data and voice networks.

Integrated Services Digital Network (ISDN) - an emerging technology that is beginning to be offered by the telephone carriers of the world. ISDN combines voice and digital network services into a single medium or wire.

Interexchange Carriers (IXC) - Long-distance communications companies that provide service between Local Access Transport Areas (LATAs).

Interface Data - the unit of information transferred to/from the upper layer in a single interaction across a SAP. Each Interface Data Unit (IDU) controls interface information and may also contain the whole or part of the SDU.

Interface Data Unit (IDU) - The unit of information transferred to/from the upper layer in a single interaction across the SAP. Each IDU contains interface control information and may also contain the whole or part of the SDU.

Interim Local Management Interface (ILMI) - the standard that specifies the use of the Simple Network Management Protocol (SNMP) and an ATM management information base (MIB) to provide network status and configuration information.

Intermediate System (IS) - a system that provides forwarding functions or relaying functions or both for a specific ATM connection. OAM cells may be generated and received.

International Standards Organization (ISO) - a voluntary, non treaty organization founded in 1946 that is responsible for creating international standards in many areas, including computers and communications.

International Telephone and Telegraph Consultative Committee (CCITT) - the international standards body for telecommunications.

Internet - (note the capital "I") the largest internet in the world including large national backbone nets and many regional and local networks worldwide. The Internet uses the TCP/IP suite. Networks with only e-mail connectivity are not considered on the Internet.

internet - while an internet is a network, the term "internet" is usually used to refer to a collection of networks interconnected with routers.

Internet Addresses - the numbers used to identify hosts on an internet network. Internet host numbers are divided into two parts; the first is the network number and the second, or local, part is a host number on that particular network. There are also three classes of networks in the Internet, based on the number of hosts on a given network. Large networks are classified as Class A, having addresses in the range 1-126 and having a maximum of 16,387,064 hosts. Medium networks are classified as Class B, with addresses in the range 128-191 and with a maximum of 64,516 hosts. Small networks are classified as Class C, having addresses in the range 192-254 with a maximum of 254 hosts. Addresses are given as dotted decimal numbers in the following format:

nnn.nnn.nnn.nnn

In a Class A network, the first of the numbers is the network number, the last three numbers are the local host address.

In a Class B network, the first two numbers are the network, the last two are the local host address.

In a Class C network, the first three numbers are the network address, the last number is the local host address.

The following table summarizes the classes and sizes:

Class	First #	Max# Hosts
A	1-126	16,387,064
B	129-191	64,516
C	192-223	254

Network mask values are used to identify the network portion and the host portion of the address. Default network masks are as follows:

Class A - 255.0.0.0

Class B - 255.255.0.0

Class C - 255.255.255.0

Subnet masking is used when a portion of the host ID is used to identify a subnetwork. For example, if a portion of a Class B network address is used for a subnetwork, the mask could be set as 255.255.255.0. This would allow the third byte to be used as a subnetwork address. All hosts on the network would still use the IP address to get on the Internet.

Internet Control Message Protocol (ICMP) - the protocol that handles errors and control messages at the IP layer. ICMP is actually a part of the IP protocol layer. It can generate error messages, test packets, and informational messages related to IP.

Internet Engineering Task Force (IETF) - a large, open, international community of network designers, operators, vendors and researchers whose purpose is to coordinate the operation, management and evolution of the Internet to resolve short- and mid-range protocol and architectural issues.

Internet Protocol (IP) - a connectionless, best-effort packet switching protocol that offers a common layer over dissimilar networks.

Internetwork Packet Exchange (IPX) Protocol - a NetWare protocol similar to the Xerox Network Systems (XNS) protocol that provides datagram delivery of messages.

Interoperability - The ability of software and hardware on multiple machines, from multiple vendors, to communicate.

Interworking Function (IWF) - provides a means for two different technologies to interoperate.

IP Address - a unique 32-bit integer used to identify a device in an IP network. You will most commonly see IP addresses written in “dot” notation (e.g., 192.228.32.14).

IP Netmask - a 32-bit pattern that is combined with an IP address to determine which bits of an IP address denote the network number and which denote the host number. Netmasks are useful for sub-dividing IP networks. IP netmasks are written in “dot” notation (e.g., 255.255.0.0).

ISA Bus - a bus standard developed by IBM for expansion cards in the first IBM PC. The original bus supported a data path only 8 bits wide. IBM subsequently developed a 16-bit version for its AT class computers. The 16-bit AT ISA bus supports both 8- and 16-bit cards. The 8-bit bus is commonly called the PC/XT bus, and the 16-bit bus is called the AT bus.

Isochronous - signals carrying embedded timing information or signals that are dependent on uniform timing; usually associated with voice and/or video transmission.

International Telecommunications Union Telecommunications (ITU-T) - an international body of member countries whose task is to define recommendations and standards relating to the international telecommunications industry. The fundamental standards for ATM have been defined and published by the ITU-T (Previously CCITT).

J2 - Wide-area digital transmission scheme used predominantly in Japan that carries data at a rate of 6.312 Mbps.

Jitter - analog communication line distortion caused by variations of a signal from its reference timing position.

Joint Photographic Experts Group (JPEG) - An ISO Standards group that defines how to compress still pictures.

Jumper - a patch cable or wire used to establish a circuit, often temporarily, for testing or diagnostics; also, the devices, shorting blocks, used to connect adjacent exposed pins on a printed circuit board that control the functionality of the card.

Kbps - kilobits per second (thousand)

LAN Access Concentrator - a LAN access device that allows a shared transmission medium to accommodate more data sources than there are channels currently available within the transmission medium.

LAN Emulation Address Resolution Protocol (LE_ARP) - A message issued by a LE client to solicit the ATM address of another function.

LAN Emulation Client (LEC) - the component in an end system that performs data forwarding, address resolution, and other control functions when communicating with other components within an ELAN.

LAN Emulation Configuration Server (LECS) - the LECS is responsible for the initial configuration of LECs. It provides information about available ELANs that a LEC may join, together with the addresses of the LES and BUS associated with each ELAN.

LAN Emulation Server (LES) - the LES implements the control coordination function for an ELAN by registering and resolving MAC addresses to ATM addresses.

LAN Emulation (LANE) - technology that allows an ATM network to function as a LAN backbone. The ATM network must provide multicast and broadcast support, address mapping (MAC-to-ATM), SVC management, and a usable packet format. LANE also defines Ethernet and Token Ring ELANs.

lane - a program that provides control over the execution of the LAN Emulation Server (LES), Broadcast/Unknown Server (BUS), and LAN Emulation Configuration Server (LECS) on the local host.

Latency - The time interval between a network station seeking access to a transmission channel and that access being granted or received.

Layer Entity - an active layer within an element.

Layer Function - a part of the activity of the layer entities.

Layer Service - a capability of a layer and the layers beneath it that is provided to the upper layer entities at the boundary between that layer and the next higher layer.

Layer User Data - the information transferred between corresponding entities on behalf of the upper layer or layer management entities for which they are providing services.

le - a FORE program that implements both the LAN Emulation Server (LES) and the Broadcast/Unknown Server (BUS).

Leaky Bucket - informal cell policing term for the Generic Cell Rate Algorithm which in effect receives cells into a bucket and leaks them out at the specified or contracted rate (i.e., PCR).

Least Significant Bit (LSB) - lowest order bit in the binary representation of a numerical value.

lecs - a FORE program that implements the assignment of individual LECs to different emulated LANs.

leq - a FORE program that provides information about an ELAN. This information is obtained from the LES, and includes MAC addresses registered on the ELAN together with their corresponding ATM addresses.

Line Build Out (LBO) - Because T1 circuits require the last span to lose 15-22.5 dB, a selectable output attenuation is generally required of DTE equipment (typical selections include 0.0, 7.5 and 15 dB of loss at 772 KHz).

Line Code Violations (LCV) - Error Event. A Line Coding Violation (LCV) is the occurrence of either a Bipolar Violation (BPV) or Excessive Zeroes (EXZ) Error Event.

Link - An entity that defines a topological relationship (including available transport capacity) between two nodes in different subnetworks. Multiple links may exist between a pair of subnetworks. Synonymous with logical link.

Link Access Procedure, Balanced (LAPB) - Data link protocol in the X.25 protocol stack. LAPB is a bit-oriented protocol derived from HDLC. See also HDLC and X.25.

Link Down Trap - an SNMP trap, sent when an interface changes from a normal state to an error state, or is disconnected.

Link Layer - layer in the OSI model regarding transmission of data between network nodes.

Link Up Trap - an SNMP trap, sent when an interface changes from an error condition to a normal state.

Load Sharing - Two or more computers in a system that share the load during peak hours. During periods of non peak hours, one computer can manage the entire load with the other acting as a backup.

Local Access and Transport Area (LATA) - Geographic boundaries of the local telephone network, specified by the FCC, in which a single LEC may perform its operations. Communications outside or between LATAs are provided by IXCs.

Local Area Network (LAN) - a data network intended to serve an area of only a few square kilometers or less. Because the network is known to cover only a small area, optimizations can be made in the network signal protocols that permit higher data rates.

Logical Link Control (LLC) - protocol developed by the IEEE 802 committee for data-link-layer transmission control; the upper sublayer of the IEEE Layer 2 (OSI) protocol that complements the MAC protocol; IEEE standard 802.2; includes end-system addressing and error checking.

Loopback - a troubleshooting technique that returns a transmitted signal to its source so that the signal can be analyzed for errors. Typically, a loopback is set at various points in a line until the section of the line that is causing the problem is discovered.

looptest - program that tests an interface for basic cell reception and transmission functionality, usually used for diagnostic purposes to determine if an interface is functioning properly.

Loss Of Frame (LOF) - a type of transmission error that may occur in wide-area carrier lines.

Loss Of Pointer (LOP) - a type of transmission error that may occur in wide-area carrier lines.

Loss Of Signal (LOS) - a type of transmission error that may occur in wide-area carrier lines, or a condition declared when the DTE senses a loss of a DS1 signal from the CPE for more the 150 milliseconds (the DTE generally responds with an all ones “Blue or AIS” signal).

Management Information Base (MIB) - the set of parameters that an SNMP management station can query or set in the SNMP agent of a networked device (e.g., router).

Maximum Burst Size (MBS) - the Burst Tolerance (BT) is conveyed through the MBS which is coded as a number of cells. The BT together with the SCR and the GCRA determine the MBS that may be transmitted at the peak rate and still be in conformance with the GCRA.

Maximum Burst Tolerance - the largest burst of data that a network device is guaranteed to handle without discarding cells or packets. Bursts of data larger than the maximum burst size may be subject to discard.

Maximum Cell Delay Variance (MCDV) - This is the maximum two-point CDV objective across a link or node for the specified service category.

Maximum Cell Loss Ratio (MCLR) - This is the maximum ratio of the number of cells that do not make it across the link or node to the total number of cells arriving at the link or node.

Maximum Cell Transfer Delay (MCTD) - This is the sum of the fixed delay component across the link or node and MCDV.

Maximum Transmission Unit (MTU) - the largest unit of data that can be sent over a type of physical medium.

Mbps - megabits per second (million)

Media Access Control (MAC) - a media-specific access control protocol within IEEE 802 specifications; currently includes variations for Token Ring, token bus, and CSMA/CD; the lower sublayer of the IEEE’s link layer (OSI), which complements the Logical Link Control (LLC).

Media Attachment Unit (MAU) - device used in Ethernet and IEEE 802.3 networks that provides the interface between the AUI port of a station and the common medium of the Ethernet. The MAU, which can be built into a station or can be a separate device, performs physical layer functions including conversion of the digital data from the Ethernet interface, collision detection, and injection of bits onto the network.

Media Interface Connector (MIC) - fiber optic connector that joins fiber to the FDDI controller.

Message Identifier (MID) - message identifier used to associate ATM cells that carry segments from the same higher layer packet.

Metasignalling - an ATM Layer Management (LM) process that manages different types of signalling and possibly semipermanent virtual channels (VCs), including the assignment, removal, and checking of VCs.

Metasignalling VCs - the standardized VCs that convey metasignalling information across a User-to-Network Interface (UNI).

Metropolitan Area Network (MAN) - network designed to carry data over an area larger than a campus such as an entire city and its outlying area.

MicroChannel - a proprietary 16- or 32-bit bus developed by IBM for its PS/2 computers' internal expansion cards; also offered by others.

Minimum Cell Rate (MCR) - parameter defined by the ATM Forum for ATM traffic management, defined only for ABR transmissions and specifying the minimum value for the ACR.

Most Significant Bit (MSB) - highest order bit in the binary representation of a numerical value.

Motion Picture Experts Group (MPEG) - ISO group dealing with video and audio compression techniques and mechanisms for multiplexing and synchronizing various media streams.

MPOA Client - A device which implements the client side of one or more of the MPOA protocols, (i.e., is a SCP client and/or an RDP client. An MPOA Client is either an Edge Device Functional Group (EDFG) or a Host Behavior Functional Group (HBFG).

MPOA Server - An MPOA Server is any one of an ICFG or RSFG.

MPOA Service Area - The collection of server functions and their clients. A collection of physical devices consisting of an MPOA server plus the set of clients served by that server.

MPOA Target - A set of protocol address, path attributes, (e.g., internetwork layer QoS, other information derivable from received packet) describing the intended destination and its path attributes that MPOA devices may use as lookup keys.

Mu-Law - The PCM coding and companding standard used in Japan and North America.

Multicasting - The ability to broadcast messages to one node or a select group of nodes.

Multi-homed - a device having both an ATM and another network connection, like Ethernet.

Multimode Fiber Optic Cable (MMF) - fiber optic cable in which the signal or light propagates in multiple modes or paths. Since these paths may have varying lengths, a transmitted pulse of light may be received at different times and smeared to the point that pulses may interfere with surrounding pulses. This may cause the signal to be difficult or impossible to receive. This pulse dispersion sometimes limits the distance over which a MMF link can operate.

Multiplexing - a function within a layer that interleaves the information from multiple connections into one connection (see demultiplexing).

Multipoint Access - user access in which more than one terminal equipment (TE) is supported by a single network termination.

Multipoint-to-Multipoint Connection - a collection of associated ATM VC or VP links, and their associated endpoint nodes, with the following properties:

1. All N nodes in the connection, called Endpoints, serve as a Root Node in a Point-to-Multipoint connection to all of the (N-1) remaining endpoints.

2. Each of the endpoints can send information directly to any other endpoint, but the receiving endpoint cannot distinguish which of the endpoints is sending information without additional (e.g., higher layer) information.

Multipoint-to-Point Connection - a Point-to-Multipoint Connection may have zero bandwidth from the Root Node to the Leaf Nodes, and non-zero return bandwidth from the Leaf Nodes to the Root Node. Such a connection is also known as a Multipoint-to-Point Connection.

Multiprotocol over ATM (MPOA) - An effort taking place in the ATM Forum to standardize protocols for the purpose of running multiple network layer protocols over ATM.

Narrowband Channel - sub-voicegrade channel with a speed range of 100 to 200 bps.

National TV Standards Committee (NTSC) - Started in the US in 1953 from a specification laid down by the National Television Standards Committee. It takes the B-Y and R-Y color difference signals, attenuates them to I and Q, then modulates them using double-sideband suppressed subcarrier at 3.58MHz. The carrier reference is sent to the receiver as a burst during the back porch. An industry group that defines how television signals are encoded and transmitted in the US. (See also PAL, SECAM for non-U.S. countries).

Near-End - in a relationship between two devices in a circuit, the near-end device is the one that is local.

Network Layer - Layer three In the OSI model, the layer that is responsible for routing data across the network.

Network Management Entity (NM) - body of software in a switching system that provides the ability to manage the PNNI protocol. NM interacts with the PNNI protocol through the MIB.

Network Management Layer (NML) - an abstraction of the functions provided by systems which manage network elements on a collective basis, providing end-to-end network monitoring.

Network Management Station (NMS) - system responsible for managing a network or portion of a network by talking to network management agents, which reside in the managed nodes.

Network Module - ATM port interface cards which may be individually added to or removed from any FORE ATM switch to provide a diverse choice of connection alternatives.

Network Parameter Control (NPC) - Defined as the set of actions taken by the network to monitor and control traffic from the NNI. Its main purpose is to protect network resources from malicious as well as unintentional misbehavior which can affect the QoS of other already established connections by detecting violations of negotiated parameters and taking appropriate actions. Refer to UPC.

Network Redundancy - Duplicated network equipment and/or data which can provide a backup in case of network failures.

Network Service Access Point (NSAP) - OSI generic standard for a network address consisting of 20 octets. ATM has specified E.164 for public network addressing and the NSAP address structure for private network addresses.

Network-to-Network Interface or Network Node Interface (NNI) - the interface between two public network pieces of equipment.

Node - A computer or other device when considered as part of a network.

Non Return to Zero (NRZ) - a binary encoding scheme in which ones and zeroes are represented by opposite and alternating high and low voltages and where there is no return to a zero (reference) voltage between encoded bits.

Non Return to Zero Inverted (NRZI) - A binary encoding scheme that inverts the signal on a “1” and leaves the signal unchanged for a “0”. (Also called transition encoding.)

Nonvolatile Storage - Memory storage that does not lose its contents when power is turned off.

NuBus - a high-speed bus used in Macintosh computers, structured so users can put a card into any slot on the board without creating conflict over the priority between those cards.

nx64K - This refers to a circuit bandwidth or speed provided by the aggregation of nx64 kbps channels (where n= integer > 1). The 64K or DS0 channel is the basic rate provided by the T Carrier systems.

Nyquist Theorem - In communications theory, a formula stating that two samples per cycle is sufficient to characterize a bandwidth limited analog signal; in other words, the sampling rate must be twice the highest frequency component of the signal (i.e., sample 4 KHz analog voice channels 8000 times per second).

Object Identifier (OID) - the address of a MIB variable.

Octet - a grouping of 8 bits; similar, but not identical to, a byte.

One’s Density - The requirement for digital transmission lines in the public switched telephone network that eight consecutive “0”s cannot be in a digital data stream; exists because repeaters and clocking devices within the network will lose timing after receiving eight “0”s in a row; a number of techniques are used to insert a “1” after every seventh-consecutive “0” (see Bit Stuffing).

Open Shortest Path First (OSPF) Protocol - a routing algorithm for IP that incorporates least-cost, equal-cost, and load balancing.

Open Systems Interconnection (OSI) - the 7-layer suite of protocols designed by ISO committees to be the international standard computer network architecture.

OpenView - Hewlett-Packard's network management software.

Operation and Maintenance (OAM) Cell - a cell that contains ATM LM information. It does not form part of the upper layer information transfer.

Optical Carrier level-n (OC-n) - The optical counterpart of STS-n (the basic rate of 51.84 Mbps on which SONET is based is referred to as OC-1 or STS-1).

Organizationally Unique Identifier (OUI) - Part of RFC 1483. A three-octet field in the SubNetwork Attachment Point (SNAP) header, identifying an organization which administers the meaning of the following two octet Protocol Identifier (PID) field in the SNAP header. Together they identify a distinct routed or bridged protocol.

Out-of-Band Management - refers to switch configuration via the serial port or over Ethernet, not ATM.

Out-of-Frame (OOF) - a signal condition and alarm in which some or all framing bits are lost.

Packet - An arbitrary collection of data grouped and transmitted with its user identification over a shared facility.

Packet Assembler Disassembler (PAD) - interface device that buffers data sent to/from character mode devices, and assembles and disassembles the packets needed for X.25 operation.

Packet Internet Groper (ping) - a program used to test reachability of destinations by sending them an ICMP echo request and waiting for a reply.

Packet Level Protocol (PLP) - network layer protocol in the X.25 protocol stack. Sometimes called X.25 Level 3 or X.25 Protocol.

Packet Switched Network (PSN) - a network designed to carry data in the form of packets. The packet and its format is internal to that network.

Packet Switching - a communications paradigm in which packets (messages) are individually routed between hosts with no previously established communications path.

Partial Packet Discard - a mechanism that allows the remaining cells of an AAL5 frame to be discarded when one or more cells of that AAL5 frame have been dropped. PPD eliminates the sending of partial AAL5 frames through the ATM network that will have to be retransmitted by the sender.

Payload Scrambling - a technique that eliminates certain bit patterns that may occur within an ATM cell payload that could be misinterpreted by certain sensitive transmission equipment as an alarm condition.

Payload Type (PT) - bits 2...4 in the fourth byte of an ATM cell header. The PT indicates the type of information carried by the cell. At this time, values 0...3 are used to identify various types of user data, values 4 and 5 indicate management information, and values 6 and 7 are reserved for future use.

Peak Cell Rate - at the PHY Layer SAP of a point-to-point VCC, the Peak Cell Rate is the inverse of the minimum inter-arrival time T0 of the request to send an ATM-SDU.

Peak Cell Rate (PCR) - parameter defined by the ATM Forum for ATM traffic management. In CBR transmissions, PCR determines how often data samples are sent. In ABR transmissions, PCR determines the maximum value of the ACR.

Peer Entities - entities within the same layer.

Peripheral Component Interconnect (PCI) - a local-bus standard created by Intel.

Permanent Virtual Channel Connection (PVCC) - A Virtual Channel Connection (VCC) is an ATM connection where switching is performed on the VPI/VCI fields of each cell. A Permanent VCC is one which is provisioned through some network management function and left up indefinitely.

Permanent Virtual Circuit (or Channel) (PVC) - a circuit or channel through an ATM network provisioned by a carrier between two endpoints; used for dedicated long-term information transport between locations.

Permanent Virtual Path Connection (PVPC) - A Virtual Path Connection (VPC) is an ATM connection where switching is performed on the VPI field only of each cell. A PVPC is one which is provisioned through some network management function and left up indefinitely.

Phase Alternate Line (PAL) - Largely a German/British development in the late 60s, used in the UK and much of Europe. The B-Y and R-Y signals are weighted to U and V, then modulated onto a double-sideband suppressed subcarrier at 4.43MHz. The V (R-Y) signal's phase is turned through 180 degrees on each alternate line. This gets rid of NTSC's hue changes with phase errors at the expense of de-saturation. The carrier reference is sent as a burst in the back porch. The phase of the burst is alternated every line to convey the phase switching of the V signal. The burst's average phase is -V. (see NTSC for U.S.).

Physical Layer (PHY) - the actual cards, wires, and/or fiber-optic cabling used to connect computers, routers, and switches.

Physical Layer Connection - an association established by the PHY between two or more ATM-entities. A PHY connection consists of the concatenation of PHY links in order to provide an end-to-end transfer capability to PHY SAPs.

Physical Layer Convergence Protocol (PLCP) - a framing protocol that runs on top of the T1 or E1 framing protocol.

Physical Medium (PM) - Refers to the actual physical interfaces. Several interfaces are defined including STS-1, STS-3c, STS-12c, STM-1, STM-4, DS1, E1, DS2, E3, DS3, E4, FDDI-based, Fiber Channel-based, and STP. These range in speeds from 1.544Mbps through 622.08 Mbps.

Physical Medium Dependent (PMD) - a sublayer concerned with the bit transfer between two network nodes. It deals with wave shapes, timing recovery, line coding, and electro-optic conversions for fiber based links.

Plesiochronous - two signals are plesiochronous if their corresponding significant instants occur at nominally the same rate, with variations in rate constrained to specified limits.

Point of Demarcation - the dividing line between a carrier and the customer premise that is governed by strict standards that define the characteristics of the equipment on each side of the demarcation. Equipment on one side of the point of demarcation is the responsibility of the customer. Equipment on the other side of the point of demarcation is the responsibility of the carrier.

Point-to-Multipoint Connection - a collection of associated ATM VC or VP links, with associated endpoint nodes, with the following properties:

1. One ATM link, called the Root Link, serves as the root in a simple tree topology. When the Root node sends information, all of the remaining nodes on the connection, called Leaf nodes, receive copies of the information.

2. Each of the Leaf Nodes on the connection can send information directly to the Root Node. The Root Node cannot distinguish which Leaf is sending information without additional (higher layer) information. (See the following note for Phase 1.)

3. The Leaf Nodes cannot communicate directly to each other with this connection type.

Note: Phase 1 signalling does not support traffic sent from a Leaf to the Root.

Point-to-Point Connection - a connection with only two endpoints.

Point-to-Point Protocol (PPP) - Provides a method for transmitting packets over serial point-to-point links.

Policing - the function that ensures that a network device does not accept traffic that exceeds the configured bandwidth of a connection.

Port Identifier - The identifier assigned by a logical node to represent the point of attachment of a link to that node.

Presentation Layer - Sixth layer of the OSI model, providing services to the application layer.

Primary Reference Source (PRS) - Equipment that provides a timing signal whose long-term accuracy is maintained at 1 x 10 -11 or better with verification to universal coordinated time (UTC) and whose timing signal is used as the basis of reference for the control of other clocks within a network.

Primitive - an abstract, implementation-independent interaction between a layer service user and a layer service provider.

Priority - the parameter of ATM connections that determines the order in which they are reduced from the peak cell rate to the sustained cell rate in times of congestion. Connections with lower priority (4 is low, 1 is high) are reduced first.

Private Branch Exchange (PBX) - a private phone system (switch) that connects to the public telephone network and offers in-house connectivity. To reach an outside line, the user must dial a digit like 8 or 9.

Private Network Node Interface or Private Network-to-Network Interface (PNNI) - a protocol that defines the interaction of private ATM switches or groups of private ATM switches

Programmable Read-Only Memory (PROM) - a chip-based information storage area that can be recorded by an operator but erased only through a physical process.

Protocol - a set of rules and formats (semantic and syntactic) that determines the communication behavior of layer entities in the performance of the layer functions.

Protocol Control Information - the information exchanged between corresponding entities using a lower layer connection to coordinate their joint operation.

Protocol Data Unit (PDU) - a unit of data specified in a layer protocol and consisting of protocol control information and layer user data.

Proxy - the process in which one system acts for another system to answer protocol requests.

Proxy Agent - an agent that queries on behalf of the manager, used to monitor objects that are not directly manageable.

Public Data Network (PDN) - a network designed primarily for data transmission and intended for sharing by many users from many organizations.

Pulse Code Modulation (PCM) - a modulation scheme that samples the information signals and transmits a series of coded pulses to represent the data.

Q.2931 - Derived from Q.93B, the narrowband ISDN signalling protocol, an ITU standard describing the signalling protocol to be used by switched virtual circuits on ATM LANs.

Quality of Service (QoS) - Quality of Service is defined on an end-to-end basis in terms of the following attributes of the end-to-end ATM connection:

Cell Loss Ratio
Cell Transfer Delay
Cell Delay Variation

Queuing Delay (QD) - refers to the delay imposed on a cell by its having to be buffered because of unavailability of resources to pass the cell onto the next network function or element. This buffering could be a result of oversubscription of a physical link, or due to a connection of higher priority or tighter service constraints getting the resource of the physical link.

Radio Frequency Interference (RFI) - the unintentional transmission of radio signals. Computer equipment and wiring can both generate and receive RFI.

Real-Time Clock - a clock that maintains the time of day, in contrast to a clock that is used to time the electrical pulses on a circuit.

Red Alarm - In T1, a red alarm is generated for a locally detected failure such as when a condition like OOF exists for 2.5 seconds, causing a CGA, (Carrier Group Alarm).

Reduced Instruction Set Computer (RISC) - a generic name for CPUs that use a simpler instruction set than more traditional designs.

Redundancy - In a data transmission, the fragments of characters and bits that can be eliminated with no loss of information.

Registration - The address registration function is the mechanism by which Clients provide address information to the LAN Emulation Server.

Relaying - a function of a layer by means of which a layer entity receives data from a corresponding entity and transmits it to another corresponding entity.

Request To Send (RTS) - an RS-232 modem interface signal (sent from the DTE to the modem on pin 4) which indicates that the DTE has data to transmit.

Requests For Comment (RFCs) - IETF documents suggesting protocols and policies of the Internet, inviting comments as to the quality and validity of those policies. These comments are collected and analyzed by the IETF in order to finalize Internet standards.

RFC1483 - Multiprotocol Encapsulation over ATM Adaptation Layer 5.
RFC1490 - Multiprotocol Interconnect over Frame Relay.
RFC1577 - Classical IP and ARP over ATM.
RFC1755 - ATM Signaling Support for IP over ATM.

Robbed-Bit Signaling - In T1, refers to the use of the least significant bit of every word of frames 6 and 12 (D4), or 6, 12, 18, and 24 (ESF) for signaling purposes.

Route Server - A physical device that runs one or more network layer routing protocols, and which uses a route query protocol in order to provide network layer routing forwarding descriptions to clients.

Router - a device that forwards traffic between networks or subnetworks based on network layer information.

Routing Domain (RD) - A group of topologically contiguous systems which are running one instance of routing.

Routing Information Protocol (RIP) - a distance vector-based protocol that provides a measure of distance, or hops, from a transmitting workstation to a receiving workstation.

Routing Protocol - A general term indicating a protocol run between routers and/or route servers in order to exchange information used to allow computation of routes. The result of the routing computation will be one or more forwarding descriptions.

SBus - hardware interface for add-in boards in later-version Sun 3 workstations.

Scalable Processor Architecture Reduced instruction set Computer (SPARC) - a powerful workstation similar to a reduced-instruction-set-computing (RISC) workstation.

Segment - a single ATM link or group of interconnected ATM links of an ATM connection.

Segmentation And Reassembly (SAR) - the SAR accepts PDUs from the CS and divides them into very small segments (44 bytes long). If the CS-PDU is less than 44 bytes, it is padded to 44 with zeroes. A two-byte header and trailer are added to this basic segment. The header identifies the message type (beginning, end, continuation, or single) and contains sequence numbering and message identification. The trailer gives the SAR-PDU payload length, exclusive of pad, and contains a CRC check to ensure the SAR-PDU integrity. The result is a 48-byte PDU that fits into the payload field of an ATM cell.

Selector (SEL) - A subfield carried in SETUP message part of ATM endpoint address Domain specific Part (DSP) defined by ISO 10589, not used for ATM network routing, used by ATM end systems only.

Semipermanent Connection - a connection established via a service order or via network management.

Serial Line IP (SLIP) - A protocol used to run IP over serial lines, such as telephone circuits or RS-232 cables, interconnecting two systems.

Service Access Point (SAP) - the point at which an entity of a layer provides services to its LM entity or to an entity of the next higher layer.

Service Data Unit (SDU) - a unit of interface information whose identity is preserved from one end of a layer connection to the other.

Service Specific Connection Oriented Protocol (SSCOP) - an adaptation layer protocol defined in ITU-T Specification: Q.2110.

Service Specific Convergence Sublayer (SSCS) - The portion of the convergence sublayer that is dependent upon the type of traffic that is being converted.

Session Layer - Layer 5 in the OSI model that is responsible for establishing and managing sessions between the application programs running in different nodes.

Severely Errored Seconds (SES) - a second during which more event errors have occurred than the SES threshold (normally 10-3).

Shaping Descriptor - *n* ordered pairs of GCRA parameters (I,L) used to define the negotiated traffic shape of an APP connection. The traffic shape refers to the load-balancing of a network, where load-balancing means configuring data flows to maximize network efficiency.

Shielded Pair - Two insulated wires in a cable wrapped with metallic braid or foil to prevent interference and provide noise free transmission.

Shielded Twisted Pair (STP) - two or more insulated wires, twisted together and then wrapped in a cable with metallic braid or foil to prevent interference and offer noise-free transmissions.

Signaling System No. 7 (SS7) - The SS7 protocol has been specified by ITU-T and is a protocol for interexchange signaling.

Simple and Efficient Adaptation Layer (SEAL) - also called AAL 5, this ATM adaptation layer assumes that higher layer processes will provide error recovery, thereby simplifying the SAR portion of the adaptation layer. Using this AAL type packs all 48 bytes of an ATM cell information field with data. It also assumes that only one message is crossing the UNI at a time. That is, multiple end-users at one location cannot interleave messages on the same VC, but must queue them for sequential transmission.

Simple Gateway Management Protocol (SGMP) - the predecessor to SNMP.

Simple Mail Transfer Protocol (SMTP) - the Internet electronic mail protocol used to transfer electronic mail between hosts.

Simple Network Management Protocol (SNMP) - the Internet standard protocol for managing nodes on an IP network.

Simple Protocol for ATM Network Signalling (SPANS) - FORE Systems' proprietary signalling protocol used for establishing SVCs between FORE Systems equipment.

Single Mode Fiber (SMF) - Fiber optic cable in which the signal or light propagates in a single mode or path. Since all light follows the same path or travels the same distance, a transmitted pulse is not dispersed and does not interfere with adjacent pulses. SMF fibers can support longer distances and are limited mainly by the amount of attenuation. Refer to MMF.

Small Computer Systems Interface (SCSI) - a standard for a controller bus that connects hardware devices to their controllers on a computer bus, typically used in small systems.

Smart PVC (SPVC) - a generic term for any communications medium which is permanently provisioned at the end points, but switched in the middle. In ATM, there are two kinds of SPVCs: smart permanent virtual path connections (SPVPCs) and smart permanent virtual channel connections (SPVCCs).

snmpd - an SMNP agent for a given adapter card.

Source - Part of communications system which transmits information.

Source Address (SA) - The address from which the message or data originated.

Source MAC Address (SA) - A six octet value uniquely identifying an end point and which is sent in an IEEE LAN frame header to indicate source of frame.

Source Traffic Descriptor - a set of traffic parameters belonging to the ATM Traffic Descriptor used during the connection set-up to capture the intrinsic traffic characteristics of the connection requested by the source.

Spanning Tree Protocol - provides loop-free topology in a network environment where there are redundant paths.

Static Route - a route that is entered manually into the routing table.

Statistical Multiplexing - a technique for allowing multiple channels and paths to share the same link, typified by the ability to give the bandwidth of a temporarily idle channel to another channel.

Stick and Click (SC) - Designation for an Optical Connector featuring a 2.5 mm physically contacting ferrule with a push-pull mating design. Commonly referred to as Structured Cabling, Structured Connectors or Stick and Click

Stick and Turn (ST) - A fiber-optic connector designed by AT&T which uses the bayonet style coupling rather than screw-on as the SMA uses. The ST is generally considered the eventual replacement for the SMA type connector.

Store-and-Forward - the technique of receiving a message, storing it until the proper outgoing line is available, then retransmitting it, with no direct connection between incoming and outgoing lines.

Straight Tip (ST) - see *Stick and Turn*.

Structured Cabling (SC) - see *Stick and Click.*

Structured Connectors (SC) - see *Stick and Click*.

Sublayer - a logical subdivision of a layer.

SubNetwork Access Protocol (SNAP) - a specially reserved variant of IEEE 802.2 encoding SNAP indicates to look further into the packet where it will fine a Type field.

Subscriber Network Interface (SNI) - the interface between an SMDS end user's CPE and the network directly serving the end user, supported by either a DS1 or DS3 access arrangement.

Super Frame (SF) - a term used to describe the repeating 12 D4 frame format that composes a standard (non-ESF) T1 service.

Super User - a login ID that allows unlimited access to the full range of a device's functionality, including especially the ability to reconfigure the device and set passwords.

Sustainable Cell Rate (SCR) - ATM Forum parameter defined for traffic management. For VBR connections, SCR determines the long-term average cell rate that can be transmitted.

Sustained Information Rate (SIR) - In ATM this refers to the long-term average data transmission rate across the User-to-Network Interface. In SMDS this refers to the committed information rate (similar to CIR for Frame Relay Service).

Switch - Equipment used to interconnect lines and trunks.

Switched Connection - A connection established via signaling.

Switched Multimegabit Data Service (SMDS) - a high-speed, datagram-based, public data network service expected to be widely used by telephone companies in their data networks.

Switched Virtual Channel Connection (SVCC) - A Switched VCC is one which is established and taken down dynamically through control signaling. A Virtual Channel Connection (VCC) is an ATM connection where switching is performed on the VPI/VCI fields of each cell.

Switched Virtual Circuit (or Channel) (SVC) - a channel established on demand by network signalling, used for information transport between two locations and lasting only for the duration of the transfer; the datacom equivalent of a dialed telephone call.

Switched Virtual Path Connection (SVPC) - a connection which is established and taken down dynamically through control signaling. A Virtual Path Connection (VPC) is an ATM connection where switching is performed on the VPI field only of each cell.

Switching System - A set of one or more systems that act together and appear as a single switch for the purposes of PNNI routing.

Symmetric Connection - a connection with the same bandwidth specified for both directions.

Synchronous - signals that are sourced from the same timing reference and hence are identical in frequency.

Synchronous Data Link Control (SDLC) - IBM's data link protocol used in SNA networks.

Synchronous Optical Network (SONET) - a body of standards that defines all aspects of transporting and managing digital traffic over optical facilities in the public network.

Synchronous Payload Envelope (SPE) - the payload field plus a little overhead of a basic SONET signal.

Synchronous Transfer Mode (STM) - a transport and switching method that depends on information occurring in regular, fixed patterns with respect to a reference such as a frame pattern.

Synchronous Transport Signal (STS) - a SONET electrical signal rate.

Systeme En Coleur Avec Memoire (SECAM) - Sequential and Memory Color Television - Started in France in the late 60s, and used by other countries with a political affiliation. This is. The B-Y and R-Y signals are transmitted on alternate lines modulated on an FM subcarrier. The memory is a one line delay line in the receiver to make both color difference signals available at the same time on all lines. Due to FM, the signal is robust in difficult terrain.

Systems Network Architecture (SNA) - a proprietary networking architecture used by IBM and IBM-compatible mainframe computers.

T1 - a specification for a transmission line. The specification details the input and output characteristics and the bandwidth. T1 lines run at 1.544 Mbps and provide for 24 data channels. In common usage, the term “T1” is used interchangeably with “DS1.”

T1 Link - A wideband digital carrier facility used for transmission of digitized voice, digital data, and digitized image traffic. This link is composed of two twisted-wire pairs that can carry 24 digital channels, each operating at 64K bps at the aggregate rate of 1.544M bps, full duplex. Also referred to as DS-1.

T3 - a specification for a transmission line, the equivalent of 28 T1 lines. T3 lines run at 44.736 Mbps. In common usage, the term “T3” is used interchangeably with “DS3.”

Tachometer - in *ForeView*, the tachometer shows the level of activity on a given port. The number in the tachometer shows the value of a chosen parameter in percentage, with a colored bar providing a semi-logarithmic representation of that percentage.

Tagged Cell Rate (TCR) - An ABR service parameter, TCR limits the rate at which a source may send out-of-rate forward RM-cells. TCR is a constant fixed at 10 cells / second.

Telephony - The conversion of voices and other sounds into electrical signals which are then transmitted by telecommunications media.

Telnet - a TCP/IP protocol that defines a client/server mechanism for emulating directly-connected terminal connections.

Terminal Equipment (TE) - Terminal equipment represents the endpoint of ATM connection(s) and termination of the various protocols within the connection(s).

Throughput - Measurement of the total useful information processed or communicated by a computer during a specified time period, i.e. packets per second.

Time Division Multiplexing (TDM) - a method of traditional digital multiplexing in which a signal occupies a fixed, repetitive time slot within a higher-rate signal.

Token Ring - a network access method in which the stations circulate a token. Stations with data to send must have the token to transmit their data.

topology - a program that displays the topology of a FORE Systems ATM network. An updated topology can be periodically re-displayed by use of the interval command option.

Traffic - the calls being sent and received over a communications network. Also, the packets that are sent on a data network.

Traffic Management (TM) - The traffic control and congestion control procedures for ATM. ATM layer traffic control refers to the set of actions taken by the network to avoid congestion conditions. ATM layer congestion control refers to the set of actions taken by the network to minimize the intensity, spread and duration of congestion. The following functions form a framework for managing and controlling traffic and congestion in ATM networks and may be used in appropriate combinations:

Connection Admission Control
Feedback Control
Usage Parameter Control
Priority Control
Traffic Shaping
Network Resource Management
Frame Discard
ABR Flow Control

Traffic Parameter - A parameter for specifying a particular traffic aspect of a connection.

Trailer - the protocol control information located at the end of a PDU.

Transit Delay - the time difference between the instant at which the first bit of a PDU crosses one designated boundary, and the instant at which the last bit of the same PDU crosses a second designated boundary.

Transmission Control Protocol (TCP) - a specification for software that bundles and unbundles sent and received data into packets, manages the transmission of packets on a network, and checks for errors.

Transmission Control Protocol/Internet Protocol (TCP/IP) - a set of communications protocols that has evolved since the late 1970s, when it was first developed by the Department of Defense. Because programs supporting these protocols are available on so many different computer systems, they have become an excellent way to connect different types of computers over networks.

Transmission Convergence (TC) - generates and receives transmission frames and is responsible for all overhead associated with the transmission frame. The TC sublayer packages cells into the transmission frame.

Transmission Convergence Sublayer (TCS) - This is part of the ATM physical layer that defines how cells will be transmitted by the actual physical layer.

Transparent Asynchronous Transmitter/Receiver Interface (TAXI) - Encoding scheme used for FDDI LANs as well as for ATM; supports speed typical of 100 Mbps over multimode fiber.

Transport Layer - Layer Four of the OSI reference model that is responsible for maintaining reliable end-to-end communications across the network.

trap - a program interrupt mechanism that automatically updates the state of the network to remote network management hosts. The SNMP agent on the switch supports these SNMP traps.

Trivial File Transfer Protocol (TFTP) - Part of IP, a simplified version of FTP that allows files to be transferred from one computer to another over a network.

Twisted Pair - Insulated wire in which pairs are twisted together. Commonly used for telephone connections, and LANs because it is inexpensive.

Unassigned Cells - a generated cell identified by a standardized virtual path identifier (VPI) and virtual channel identifier (VCI) value, which does not carry information from an application using the ATM Layer service.

Unavailable Seconds (UAS) - a measurement of signal quality. Unavailable seconds start accruing when ten consecutive severely errored seconds occur.

UNI 3.0/3.1 - the User-to-Network Interface standard set forth by the ATM Forum that defines how private customer premise equipment interacts with private ATM switches.

Unicasting - The transmit operation of a single PDU by a source interface where the PDU reaches a single destination.

Universal Test & Operations Interface for ATM (UTOPIA) - Refers to an electrical interface between the TC and PMD sublayers of the PHY layer.

Unshielded Twisted Pair (UTP) - a cable that consists of two or more insulated conductors in which each pair of conductors are twisted around each other. There is no external protection and noise resistance comes solely from the twists.

Unspecified Bit Rate (UBR) - a type of traffic that is not considered time-critical (e.g., ARP messages, pure data), allocated whatever bandwidth is available at any given time. UBR traffic is given a "best effort" priority in an ATM network with no guarantee of successful transmission.

Uplink - Represents the connectivity from a border node to an upnode.

Usage Parameter Control (UPC) - mechanism that ensures that traffic on a given connection does not exceed the contracted bandwidth of the connection, responsible for policing or enforcement. UPC is sometimes confused with congestion management (see *congestion management*).

User Datagram Protocol (UDP) - the TCP/IP transaction protocol used for applications such as remote network management and name-service access; this lets users assign a name, such as "RVAX*2,S," to a physical or numbered address.

User-to-Network Interface (UNI) - the physical and electrical demarcation point between the user and the public network service provider.

V.35 - ITU-T standard describing a synchronous, physical layer protocol used for communications between a network access device and a packet network. V.35 is most commonly used in the United States and Europe, and is recommended for speeds up to 48 Kbps.

Variable Bit Rate (VBR) - a type of traffic that, when sent over a network, is tolerant of delays and changes in the amount of bandwidth it is allocated (e.g., data applications).

Virtual Channel (or Circuit) (VC) - a communications path between two nodes identified by label rather than fixed physical path.

Virtual Channel Connection (VCC) - a unidirectional concatenation of VCLs that extends between the points where the ATM service users access the ATM Layer. The points at which the ATM cell payload is passed to, or received from, the users of the ATM Layer (i.e., a higher layer or ATMM-entity) for processing signify the endpoints of a VCC.

Virtual Channel Identifier (VCI) - the address or label of a VC; a value stored in a field in the ATM cell header that identifies an individual virtual channel to which the cell belongs. VCI values may be different for each data link hop of an ATM virtual connection.

Virtual Channel Link (VCL) - a means of unidirectional transport of ATM cells between the point where a VCI value is assigned and the point where that value is translated or removed.

Virtual Channel Switch - a network element that connects VCLs. It terminates VPCs and translates VCI values. The Virtual Channel Switch is directed by Control Plane functions and relays the cells of a VC.

Virtual Connection - an endpoint-to-endpoint connection in an ATM network. A virtual connection can be either a virtual path or a virtual channel.

Virtual Local Area Network (VLAN) - Work stations connected to an intelligent device which provides the capabilities to define LAN membership.

Virtual Network Software (VINES) - Banyan's network operating system based on UNIX and its protocols.

Virtual Path (VP) - a unidirectional logical association or bundle of VCs.

Virtual Path Connection (VPC) - a concatenation of VPLs between virtual path terminators (VPTs). VPCs are unidirectional.

Virtual Path Identifier (VPI) - the address or label of a particular VP; a value stored in a field in the ATM cell header that identifies an individual virtual path to which the cell belongs. A virtual path may comprise multiple virtual channels.

Virtual Path Link (VPL) - a means of unidirectional transport of ATM cells between the point where a VPI value is assigned and the point where that value is translated or removed.

Virtual Path Switch - a network element that connects VPLs, it translates VPI (not VCI) values and is directed by Control Plane functions. The Virtual Path Switch relays the cells of a Virtual Path.

Virtual Path Terminator (VPT) - a system that unbundles the VCs of a VP for independent processing of each VC.

Virtual Private Data Network (VPDN) - a private data communications network built on public switching and transport facilities rather than dedicated leased facilities such as T1s.

Virtual Private Network (VPN) - a private voice communications network built on public switching and transport facilities rather than dedicated leased facilities such as T1s.

Virtual Source/Virtual Destination (VS/VD) - An ABR connection may be divided into two or more separately controlled ABR segments. Each ABR control segment, except the first, is sourced by a virtual source. A virtual source implements the behavior of an ABR source endpoint. Backwards RM-cells received by a virtual source are removed from the connection. Each ABR control segment, except the last, is terminated by a virtual destination. A virtual destination assumes the behavior of an ABR destination endpoint. Forward RM-cells received by a virtual destination are turned around and not forwarded to the next segment of the connection.

Virtual Tributary (VT) - a structure used to carry payloads such as DS1s that run at significantly lower rates than STS-1s.

Warm Start Trap - an SNMP trap which indicates that SNMP alarm messages or agents have been enabled.

Wide-Area Network (WAN) - a network that covers a large geographic area.

Wideband Channel - Communications channel with more capacity (19.2K bps) than the standard capacity of a voice grade line.

X.21 - ITU-T standard for serial communications over synchronous digital lines. The X.21 protocol is used primarily in Europe and Japan.

X.25 - a well-established data switching and transport method that relies on a significant amount of processing to ensure reliable transport over metallic media.

Yellow Alarm - An alarm signal sent back toward the source of a failed signal due to the presence of an AIS (may be used by APS equipment to initiate switching).

Zero Byte Time Slot Interchange (ZBTSI) - A technique used with the T carrier extended superframe format (ESF) in which an area in the ESF frame carries information about the location of all-zero bytes (eight consecutive “0”s) within the data stream.

Zero Code Suppression - The insertion of a “1” bit to prevent the transmission of eight or more consecutive “0” bits. Used primarily with T1 and related digital telephone company facilities, which require a minimum “1’s density” in order to keep the individual subchannels of a multiplexed, high speed facility active.

Zero-Bit Insertion - A technique used to achieve transparency in bit-oriented protocols. A zero is inserted into sequences of one bits that cause false flag direction.

Index

A

about command in EMI . . . . . 2 - 7
AC power supply (model A)
displaying information . . . . . 4 - 10
AC power supply (model B)
displaying information . . . . . 4 - 11
administrative status
changing for a timing reference . . . . . 3 - 27
alarm relay
configuring . . . . . 3 - 5
displaying . . . . . 3 - 5
setting in EMI . . . . . 3 - 5
alarm relay contacts . . . . . 1 - 15
alarms
disabling in EMI . . . . . 3 - 4
displaying in EMI . . . . . 3 - 2
enabling in EMI . . . . . 3 - 3
Alternate Mark Inversion (AMI) coding . . . . . 3 - 28
automatic timing mode . . . . . 3 - 31

B

B8ZS coding . . . . . 3 - 28
BITS clock ports . . . . . 1 - 20
BITS receive (Rx) port . . . . . 1 - 20
BITS Rx port pinouts . . . . . 1 - 22
BITS timing input
setting . . . . . 3 - 28
BITS transmit (Tx) port . . . . . 1 - 20
BITS Tx port pinouts . . . . . 1 - 21

C

card carrier hardware assembly . . . . . 1 - 14
CDB
initializing in EMI . . . . . 4 - 3
resetting in EMI . . . . . 4 - 3
restoring in EMI . . . . . 4 - 4
CDB (configuration database) . . . . . 4 - 2
CEC-Plus
Ethernet port . . . . . 1 - 17
Ethernet port LEDs . . . . . 1 - 18
closing an EMI session . . . . . 2 - 7
Collision (COL) LED . . . . . 1 - 18
configuration commands in EMI . . . . . 3 - 1
configuration database (CDB) . . . . . 4 - 2
backing up . . . . . 4 - 2
control port . . . . . 1 - 19
pin locations . . . . . 1 - 19
control port pinouts . . . . . 1 - 19
CPU
displaying information for an ECP . . . . . 4 - 6
current state
displaying for this ECP . . . . . 3 - 23

D

D4 framing . . . . . 3 - 29
date
displaying in EMI . . . . . 4 - 5
setting in EMI . . . . . 4 - 5
DC power supply (model A)
displaying information . . . . . 4 - 10
DC power supply (model B)
displaying information . . . . . 4 - 10

digital input connections . . . . . 1 - 15
DS1 BITS interface
configuring coding . . . . . 3 - 28
configuring framing . . . . . 3 - 29
configuring output level . . . . . 3 - 30

E

E1 BITS interface
configuring coding . . . . . 3 - 28
configuring framing . . . . . 3 - 29
ECP
displaying the status of . . . . . 3 - 22
ECP external inputs
displaying . . . . . 3 - 23
ECP hardware . . . . . 1 - 15
ECP hardware version
displaying . . . . . 3 - 23
ECP log
deleting the host address . . . . . 3 - 19
displaying the host address . . . . . 3 - 18
setting the host address . . . . . 3 - 18
ECP login
displaying information for
userids . . . . . 4 - 19
ECP login file
assigning a password to a
user . . . . . 4 - 18
backing up . . . . . 4 - 17
creating a new user . . . . . 4 - 18
deleting a user . . . . . 4 - 18
restoring . . . . . 4 - 19
ECP login userid
displaying for a user . . . . . 4 - 19
ECP name
displaying . . . . . 3 - 23
setting . . . . . 3 - 22
ECP serial port
displaying configuration of . . . . . 3 - 13
ECP slot
displaying . . . . . 3 - 23
ECP software version
displaying . . . . . 3 - 23
ECP type
displaying . . . . . 3 - 23
ECP uptime
displaying . . . . . 3 - 23
EMI
displaying the inactivity
timeout . . . . . 3 - 17
root menu . . . . . 2 - 6
setting the inactivity timeout . . . . 3 - 21
EMI (Environmental Management
Interface) . . . . . 2 - 1
EMI log messages
disabling them from being output
on the console . . . . . 3 - 21
enabling them to be output to
the console . . . . . 3 - 21
showing if they are output to
the console . . . . . 3 - 20
EMI login
serial port . . . . . 2 - 3
telnet . . . . . 2 - 4
EMI timing mode configuration . . . . . 3 - 31
ESF framing . . . . . 3 - 29
ESI card
displaying the status of . . . . . 3 - 23
Ethernet port . . . . . 1 - 17
exiting EMI . . . . . 2 - 8
Extended Management Interface
(EMI) . . . . . 2 - 1

F

failover timing . . . . . 1 - 2
failover timing delay
configuring . . . . . 3 - 30

fans
displaying information for . . . . . 4 - 10
FAS framing . . . . . 3 - 29
FASCRC4 framing . . . . . 3 - 29
FLASH
copying a file to . . . . . 4 - 13
deleting a file from . . . . . 4 - 13
displaying directory . . . . . 4 - 14
displaying free space in . . . . . 4 - 15
initializing a file . . . . . 4 - 15
putting a file . . . . . 4 - 16
renaming a file . . . . . 4 - 16
retrieving a file . . . . . 4 - 15
freerun mode . . . . . 3 - 31

H

hardware . . . . . 1 - 14
card carrier . . . . . 1 - 14
help for EMI on-line . . . . . 2 - 9
history command in EMI . . . . . 2 - 10

I

IP broadcast address
configuring for ECP . . . . . 3 - 8
IP interfaces
displaying for ECP . . . . . 3 - 11
unconfiguring for ECP . . . . . 3 - 12
IP route
adding for ECP . . . . . 3 - 9
deleting for ECP . . . . . 3 - 10
displaying for ECP . . . . . 3 - 10
IP subnet mask
configuring for ECP . . . . . 3 - 8

L

LEDs
relay status . . . . . 1 - 17

M

MFAS framing . . . . . 3 - 29
MFASCRC4 framing . . . . . 3 - 29

N

new userid
assigning . . . . . 4 - 19
NEXT pushbutton . . . . . 1 - 18

O

opening an EMI session . . . . . 2 - 10
operation commands in EMI . . . . . 4 - 1

P

panic dump file
displaying on an ECP . . . . . 4 - 22
panic flag
clearing on an ECP . . . . . 4 - 21
panic response
setting on an ECP . . . . . 4 - 20
panic state . . . . . 4 - 20
pin locations
control port . . . . . 1 - 19
relay / input connector . . . . . 1 - 16
ping command in EMI . . . . . 2 - 11
pinouts
BITS Rx port . . . . . 1 - 21
BITS Tx port . . . . . 1 - 22
control port . . . . . 1 - 19
relay / input connector . . . . . 1 - 16
Polarity (POL) LED . . . . . 1 - 18
power supply
displaying information . . . . . 4 - 10
primary clock source
configuring in EMI . . . . . 3 - 32
primary timing mode . . . . . 3 - 31

R

rebooting the ECP . . . . . 4 - 26
Receive (RX) LED . . . . . 1 - 18
redo command in EMI . . . . . 2 - 12
RefQual failure
    clearing for a timing source . . . . . 3 - 34
relay status LEDs . . . . . 1 - 17
relay / input connector . . . . . 1 - 15
    pin locations . . . . . 1 - 16
relay / input connector pinouts . . . . . 1 - 16
RESET button . . . . . 1 - 22
revertive timing
    disabling in EMI . . . . . 3 - 34
    enabling in EMI . . . . . 3 - 34
revertive timing delay
    configuring in EMI . . . . . 3 - 35
    disabling in EMI . . . . . 3 - 35
    enabling in EMI . . . . . 3 - 36
rows command in EMI . . . . . 2 - 13
RS-232 serial port . . . . . 1 - 19

S

secondary clock source
    configuring in EMI . . . . . 3 - 36
secondary timing mode . . . . . 3 - 31
SELECT pushbutton . . . . . 1 - 18
serial number
    displaying for an ECP . . . . . 3 - 23
SNMP community
    changing for EMI . . . . . 3 - 14
SNMP trap
    adding for ECP . . . . . 3 - 16
    deleting for ECP . . . . . 3 - 15
    displaying for ECP . . . . . 3 - 16
software
    changing current version for
        an ECP . . . . . 4 - 25
    displaying current version for
        an ECP . . . . . 4 - 25
statistics
    ECP ICMP . . . . . 5 - 2
    ECP interface . . . . . 5 - 5
    ECP IP . . . . . 5 - 7
    ECP TCP . . . . . 5 - 10
    ECP UDP . . . . . 5 - 12
statistics commands in EMI . . . . . 5 - 1
status LED . . . . . 1 - 20
switch fabric temperature
    displaying . . . . . 4 - 8
    setting thresholds for . . . . . 4 - 9

T

Technical Assistance Center (TAC)
    contacting ii
temperature sensors
    displaying information . . . . . 4 - 12
time
    displaying in EMI . . . . . 4 - 5
    setting in EMI . . . . . 4 - 5
timeout
    displaying for an EMI session . . . . 3 - 17
timezone
    setting on the ECP . . . . . 3 - 24
timing
    failover . . . . . 1 - 2
timing information
    displaying in EMI . . . . . 3 - 37
timing reference
    changing the administrative
        status . . . . . 3 - 27
timing references
    displaying in EMI . . . . . 3 - 33
timing source
    clearing a RefQual failure . . . . . 3 - 34

top command in EMI . . . . . 2 - 13
transfer protocol
configuring on an ECP . . . . . 3 - 17
displaying on an ECP . . . . . 3 - 17
Transmit (TX) LED . . . . . 1 - 18

U

up command in EMI . . . . . 2 - 14
upgrading ECP software . . . . . 4 - 24