TNX™ ATM Switch Installation and Maintenance Manual

MANU0225-05
Revision A
March 5, 1999

Software Version 6.0.x

FORE Systems, Inc.

1000 FORE Drive
Warrendale, PA 15086-7502
Phone: 724-742-4444
FAX: 724-742-7742

http://www.fore.com

Legal Notices

Copyright © 1995-1999 FORE Systems, Inc. All rights reserved.

U.S. Government Restricted Rights. If you are licensing the Software on behalf of the U.S. Government ("Government"), the following provisions apply to you. If the Software is supplied to the Department of Defense ("DoD"), it is classified as "Commercial Computer Software" under paragraph 252.227-7014 of the DoD Supplement to the Federal Acquisition Regulations ("DFARS") (or any successor regulations) and the Government is acquiring only the license rights granted herein (the license rights customarily provided to non-Government users). If the Software is supplied to any unit or agency of the Government other than DoD, it is classified as "Restricted Computer Software" and the Government's rights in the Software are defined in paragraph 52.227-19 of the Federal Acquisition Regulations ("FAR") (or any successor regulations) or, in the cases of NASA, in paragraph 18.52.227-86 of the NASA Supplement to the FAR (or any successor regulations).

Printed in the USA.

No part of this work covered by copyright may be reproduced in any form. Reproduction, adaptation, or translation without prior written permission is prohibited, except as allowed under the copyright laws.

This publication is provided by FORE Systems, Inc. "as-is" without warranty of any kind, either express or implied, including, but not limited to, the implied warranties or conditions of merchantability or fitness for a particular purpose. FORE Systems, Inc. shall not be liable for any errors or omissions which may occur in this publication, nor for incidental or consequential damages of any kind resulting from the furnishing, performance, or use of this publication.

Information published here is current or planned as of the date of publication of this document. Because we are improving and adding features to our products continuously, the information in this document is subject to change without notice.

RESTRICTED RIGHTS LEGEND. Use, duplication, or disclosure by the government is subject to restrictions as set forth in subparagraph (c)(1)(ii) of the Rights in Technical Data and Computer Software clause at DFARS 252.227-7013 (October 1988) and FAR 52.227-19 (June 1987).

The VxWorks software used in the Mini Loader is licensed from Wind River Systems, Inc., Copyright ©1984-1998.

TRADEMARKS

FORE Systems, AVA, *ForeRunner*, *ForeThought*, *ForeView*, and *PowerHub* are registered trademarks of FORE Systems, Inc. All Roads Lead To ATM, ASN, ATV, *CellChain*, *CellPath*, *CellStarter*, *EdgeRunner*, *FramePlus*, *ForeRunnerHE*, *ForeRunnerLE*, Intelligent Infrastructure, I2, MSC, NetPro, Networks Of Steel, *StreamRunner*, TNX, Universal Port, *VoicePlus*, and Zero Hop Routing are unregistered trademarks of FORE Systems, Inc. All other brands or product names are trademarks or registered trademarks of their respective holders.

FCC CLASS A NOTICE

WARNING: Changes or modifications to this unit not expressly approved by the party responsible for compliance could void this user's authority to operate this equipment.

NOTE: The *TNX*-210 and the *TNX*-1100 have been tested and found to comply with the limits for a Class A digital device, pursuant to Part 15 of the FCC Rules. These limits are designed to provide reasonable protection against harmful interference when the equipment is operated in a commercial environment. This equipment generates, uses, and can radiate radio frequency energy and, if not installed and used in accordance with the instruction manual, may cause harmful interference to radio communications. Operation of the equipment in a residential area is likely to cause harmful interference in which case the user will be required to correct the interference at his own expense.

DOC CLASS A NOTICE

This digital apparatus does not exceed Class A limits for radio noise emission for a digital device as set out in the Radio Interference Regulations of the Canadian Department of Communications.

Le present appareil numerique n'emet pas de bruits radioelectriques depassant les limites applicables aux appareils numeriques de la class A prescrites dans le reglement sur le brouillage radioelectrique edicte par le ministere des Communications du Canada.

CE NOTICE

Marking by the symbol **CE** indicates compliance of this system to the EMC (Electromagnetic Compatibility) directive of the European Community and compliance to the Low Voltage (Safety) Directive. Such marking is indicative that this system meets or exceeds the following technical standards:

- EN 55022 - "Limits and Methods of Measurement of Radio Interference Characteristics of Information Technology Equipment."
- EN 50082-1 - "Electromagnetic compatibility - Generic immunity standard Part 1: Residential, commercial, and light industry."
- IEC 1000-4-2 - "Electromagnetic compatibility for industrial-process measurement and control equipment Part 2: Electrostatic discharge requirements."
- IEC 1000-4-3 - "Electromagnetic compatibility for industrial-process measurement and control equipment Part 3: Radiate electromagnetic field requirements."
- IEC 1000-4-4 - "Electromagnetic compatibility for industrial-process measurement and control equipment Part 4: Electrical fast transient/burst requirements."

VCCI CLASS A NOTICE

この装置は、情報処理装置等電波障害自主規制協議会（ＶＣＣＩ）の基準に基づくクラスＡ情報技術装置です。この装置を家庭環境で使用すると電波妨害を引き起こすことがあります。この場合には使用者が適切な対策を講ずるよう要求されることがあります。

This is a Class A product based on the standard of the Voluntary Control Council for Interference by Information Technology Equipment (VCCI). If this equipment is used in a domestic environment, radio disturbance may arise. When such trouble occurs, the user may be required to take corrective actions.

AUSTRALIA EMC COMPLIANCE

This product has been tested and found to comply with the Class A electromagnetic compatibility limits specified in AS/NZ 3548.

FCC REQUIREMENTS (Notice to Users of DS1 Service)

The following instructions are provided to ensure compliance with the FCC Rules, Part 68.

(1) This device must only be connected to the DS1 network connected behind an FCC Part 68 registered channel service unit. Direct connection is not allowed.

(2) Before connecting your unit, you must inform the telephone company of the following information:

Port ID	REN/SOC	FIC	USOC
NM-6/DS1C NM-2/DS1C NM-8/DS1D NM-4/DS1D	6.0N	04DU9-BN, 04DU9-DN, 04DU9-1ZN 04DU9-1SN, and 04DU9-1KN	RJ48C

(3) If the unit appears to be malfunctioning, it should be disconnected from the telephone lines until you learn if your equipment or the telephone line is the source of the trouble. If your equipment needs repair, it should not be reconnected until it is repaired.

(4) If the telephone company finds that this equipment is exceeding tolerable parameters, the telephone company can temporarily disconnect service, although they will attempt to give you advance notice if possible.

(5) Under the FCC Rules, no customer is authorized to repair this equipment. This restriction applies regardless of whether the equipment is in or out of warranty.

(6) If the telephone company alters their equipment in a manner that will affect use of this device, they must give you advance warning so as to give you the opportunity for uninterrupted service. You will be advised of your right to file a complaint with the FCC.

CANADIAN IC CS-03 COMPLIANCE STATEMENT

NOTICE: The Industry Canada label identifies certified equipment. This certification means that the equipment meets certain telecommunications network protective, operational and safety requirements. The Industry Canada label does not guarantee the equipment will operate to the user's satisfaction.

Before installing this equipment, users should ensure that it is permissible to be connected to the facilities of the local telecommunications company. The equipment must also be installed using an acceptable method of connection. In some cases, the company's inside wiring associated with a single line individual service may be extended by means of a certified connector assembly (telephone extension cord). The customer should be aware that compliance with the above conditions may not prevent degradation of service in some situations.

Repairs to certified equipment should be made by an authorized Canadian maintenance facility designated by the supplier. Any repairs or alterations made by the user to this equipment, or equipment malfunctions, may give the telecommunications company cause to request the user to disconnect the equipment.

Users should ensure for their own protection that the electrical ground connections of the power utility, telephone lines and internal metallic water pipe system, if present, are connected together. This precaution may be particularly important in rural areas.

Caution: Users should not attempt to make such connections themselves, but should contact the appropriate electric inspection authority, or electrician, as appropriate.

E1 AND E3 NOTICE

The E1 (NM-6/E1C and NM-2/E1C) and E3 (NM-4/E3C and NM-2/E3C) network modules that are described in this manual are approved for use in FORE Systems' host systems providing that the instructions below are strictly observed. Failure to follow these instructions invalidates the approval.

Pan European Approval - CE Marking

Pan European approval of the E1 network module was issued by BABT following assessment against CTR12. This means that it can be connected to ONP and unstructured PTO-provided private circuits with 120 Ω interfaces in all European countries, according to Telecommunications Terminal Equipment (TTE) Directive 91/263/EEC. Thus, the following CE mark applies:

CE168X

The E1 and E3 network modules conform to safety standard EN60950 1992 following the provisions of Low Voltage Product Safety Directive 73/23/EEC and CE Marking Directive 93/68/EEC, and can be marked accordingly with the CE symbol.

The E1 and E3 network modules conform to EN55022 1994 and EN50082-1 1992 following the provisions of the EMC Directive 89/336/EEC, and can be marked accordingly with the CE symbol.

National Approvals

UK

Network Module	Connects to	Approval Number
E1	Structured and unstructured PTO-provided private circuits with 75 Ω interfaces	AA60953
E3	PTO-provided private circuits with 75 Ω interfaces	NS/4387/1/T/605954

Germany

Network Module	Connects to	Approval Number
E3	Structured PTO-provided private circuits with 75 Ω interfaces	A127535H for the ASX-1000 A127534H for the ASX-200BX or ASX-200WG

Switzerland

Network Module	Connects to	Approval Number
E1	Structured PTO-provided private circuits with 120 Ω interfaces	96.0872.J.N
E3	Structured PTO-provided private circuits with 75 Ω interfaces	96.0873.J.N

Required User Guide Statements - UK Installation

The use of auxiliary products not authorized by FORE Systems® in FORE Systems ATM Switches may cause the power specification to be exceeded and is a potential safety hazard.

The equipment must be installed such that with the exception of the connections to the host, clearance and creepage distances shown in the table below are maintained between the network module and any other assemblies which use or generate a voltage shown in the table below. The larger distance shown in brackets applies where the local environment within the host is subject to conductive pollution or dry non-conductive pollution which could become conductive due to condensation. Failure to maintain these minimum distances invalidates the approval.

Clearance (mm)	Creepage (mm)	Voltage Used or Generated by Host or by Network Modules
2.0	2.4 (3.8)	Up to 50 V_{rms} or V_{dc}
2.6	3.0 (4.8)	Up to 125 V_{rms} or V_{dc}
4.0	5.0 (8.0)	Up to 250 V_{rms} or V_{dc}
4.6	6.4 (10.0)	Up to 300 V_{rms} or V_{dc}

For a host or other expansion card fitted in the host, using or generating voltages greater than 300V (rms or dc), advice from a competent telecommunications engineer must be obtained before installation of the relevant equipment.	Above 300 V_{rms} or V_{dc}

NOTE: Installing the network modules in the appropriate FORE Systems hosts, according to the installation instructions provided, satisfies the requirements listed above.

The following tables show the available ports and their safety status:

NM-6/E1C and NM-2/E1C

Ports	Safety Status
E1 Ports	TNV operating at SELV
Bus Connector	SELV

NM-4/E3C and NM-2/E3C

Ports	Safety Status
E3 Ports	TNV operating at SELV
Bus Connector	SELV

SAFETY CERTIFICATIONS

ETL certified to meet Information Technology Equipment safety standards UL 1950, CSA 22.2 No. 950, and EN 60950.

Table of Contents

List of Figures

Preface

Chapter Summaries. i
Technical Support ii
Typographical Styles iii
Important Information Indicators iv
Laser Warning v
Safety Precautions. vi
Modifications to Equipment vi
Placement of a FORE Systems Product vi
Power Cord Connection vii

CHAPTER 1 Switch Hardware

1.1 Switch Hardware Configurations . . . . . 1 - 2
1.2 Switch Hardware Components . . . . . 1 - 4
1.2.1 Switch Fabric . . . . . 1 - 4
1.2.1.1 Switch Fabric . . . . . 1 - 4
1.2.1.2 SM-1100 Switch Fabric . . . . . 1 - 4
1.2.1.3 SM-1100-B Switch Fabric . . . . . 1 - 5
1.2.2 Switch Control Processor . . . . . 1 - 6
1.2.2.1 RESET Button . . . . . 1 - 8
1.2.2.2 RS-232 Serial Port . . . . . 1 - 8
1.2.2.3 Ethernet 10BaseT Port . . . . . 1 - 9
1.2.2.3.1 Ethernet LEDs on CA, CF, HA, and P5 SCPs . . . . . 1 - 9
1.2.2.3.2 Ethernet LEDs on the P266 SCP . . . . . 1 - 10
1.2.2.4 CTL Port . . . . . 1 - 10
1.2.2.5 NEXT Pushbutton . . . . . 1 - 10
1.2.2.6 SELECT Pushbutton . . . . . 1 - 10
1.2.2.7 Display LED . . . . . 1 - 11
1.2.2.8 Power LED. . . . . 1 - 12
1.2.2.9 Dual SCP Configuration . . . . . 1 - 12
1.2.3 Ethernet Connection. . . . . 1 - 15
1.2.4 Network Modules . . . . . 1 - 16
1.2.4.1 Port Numbering . . . . . 1 - 16
1.2.4.2 Network Module LED Indicators . . . . . 1 - 17

1.2.5 Power Supply Modules . . . . . 1 - 20
1.2.5.1 *TNX*-210 AC Power Supply . . . . . 1 - 20
1.2.5.2 *TNX*-210 -48 Volt DC Power Supply . . . . . 1 - 21
1.2.5.3 *TNX*-1100AC Power Supply . . . . . 1 - 24
1.2.5.3.1 Power Supply LEDs . . . . . 1 - 25
1.2.5.3.2 Shutdown Conditions . . . . . 1 - 25
1.2.5.4 *TNX*-1100 -48 Volt DC Power Supply (PS-1000/DC-B) . . . . . 1 - 27
1.2.6 *TNX*-1100 Fan Tray . . . . . 1 - 30
1.2.7 *TNX*-1100 Temperature Sensing . . . . . 1 - 30
1.2.8 *TNX*-1100 Common Equipment Card (CEC) . . . . . 1 - 31
1.2.8.1 CEC Front Panel . . . . . 1 - 31
1.2.8.2 Alarm Relay Contacts . . . . . 1 - 32
1.2.8.3 CEC Status LEDs . . . . . 1 - 33
1.2.8.3.1 Alarm LEDs . . . . . 1 - 34
1.2.8.3.2 Power Supply LEDs . . . . . 1 - 34
1.2.8.3.3 Switch Board LEDs . . . . . 1 - 34
1.2.8.4 Ethernet Port . . . . . 1 - 34
1.2.9 CEC-Plus . . . . . 1 - 37
1.2.9.1 CEC-Plus Features . . . . . 1 - 38
1.2.9.2 CEC-Plus Failover . . . . . 1 - 38
1.2.9.3 Configuration . . . . . 1 - 38
1.2.9.4 CEC-Plus Hardware . . . . . 1 - 39
1.2.9.4.1 Card Carrier Hardware . . . . . 1 - 39
1.2.9.4.2 TCM Hardware . . . . . 1 - 40
1.2.9.4.2.1 DB-25F Relay/Input Connector . . . . . 1 - 40
1.2.9.4.2.2 Relay Status LEDs . . . . . 1 - 42
1.2.9.4.2.3 SELECT/NEXT Pushbuttons . . . . . 1 - 42
1.2.9.4.2.4 DB-9F Control Port Connector . . . . . 1 - 42
1.2.9.4.2.5 Status LED . . . . . 1 - 43
1.2.9.4.2.6 10Base-T Ethernet Port . . . . . 1 - 44
1.2.9.4.2.7 Reset Button . . . . . 1 - 45
1.2.9.4.2.8 BITS Clock Input and Output Ports . . . . 1 - 45

CHAPTER 2 Switch Setup

2.1 Introduction . . . . . 2 - 1
2.2 Checking and Unpacking the Switch Package . . . . . 2 - 2
2.3 Electrical Considerations . . . . . 2 - 3
2.4 Installing a *TNX*-210 . . . . . 2 - 4
2.4.1 Rack-mounting a *TNX*-210 . . . . . 2 - 5
2.4.1.1 Required Tools . . . . . 2 - 5
2.4.1.2 Installing the Rack-mount Brackets . . . . . 2 - 5
2.4.1.3 Placing the Switch in a Rack . . . . . 2 - 6
2.4.2 Connecting a Terminal . . . . . 2 - 6

2.4.3 Connecting the *TNX*-210 to a Power Source . . . . . 2 - 7
2.4.3.1 Connecting to AC Power . . . . . 2 - 7
2.4.3.2 Connecting to DC Power . . . . . 2 - 7
2.4.4 Turning on the *TNX*-210 . . . . . 2 - 8
2.5 Installing a *TNX*-1100 . . . . . 2 - 9
2.5.1 Rack-mounting the *TNX*-1100 . . . . . 2 - 10
2.5.2 Connecting a Terminal . . . . . 2 - 10
2.5.3 Connecting the *TNX*-1100 to a Power Source . . . . . 2 - 11
2.5.3.1 Connecting to AC Power . . . . . 2 - 11
2.5.3.2 Connecting to DC Power . . . . . 2 - 11
2.5.4 Turning on the *TNX*-1100 . . . . . 2 - 13
2.6 Modem Configuration . . . . . 2 - 14
2.6.1 Modem Parameters . . . . . 2 - 14
2.7 Configuring IP Addresses . . . . . 2 - 15
2.7.1 Overview of IP Addressing . . . . . 2 - 15
2.7.1.1 Logical IP Subnets . . . . . 2 - 16
2.7.1.2 Network Classes . . . . . 2 - 16
2.7.2 Configuring Ethernet IP . . . . . 2 - 17
2.7.3 Configuring FORE IP . . . . . 2 - 17
2.7.4 Configuring Classical IP . . . . . 2 - 18
2.7.4.1 Configuring the ARP Server . . . . . 2 - 19
2.7.5 Configuring LAN Emulation . . . . . 2 - 19
2.7.6 Configuring IP Routes . . . . . 2 - 20
2.8 Subsequent Operation . . . . . 2 - 21
2.9 Post-installation Procedures . . . . . 2 - 22
2.9.1 Verifying the Installation . . . . . 2 - 22
2.9.2 AMI Security . . . . . 2 - 22

CHAPTER 3 Hardware Maintenance Procedures

3.1 Network Module Replacement . . . . . 3 - 2
3.1.1 Hot-swapping Network Modules . . . . . 3 - 2
3.2 Power Supply Module Replacement . . . . . 3 - 4
3.2.1 Hot-swapping a *TNX*-210 AC Power Supply . . . . . 3 - 4
3.2.2 Hot-swapping a *TNX*-210 DC Power Supply . . . . . 3 - 6
3.2.3 Hot-swapping a *TNX*-1100 AC Power Supply . . . . . 3 - 9
3.2.4 Hot-swapping a *TNX*-1100 DC Power Supply . . . . . 3 - 11
3.3 Fan Tray Replacement . . . . . 3 - 14
3.4 Switch Control Processor Replacement . . . . . 3 - 15
3.5 Switch Board Replacement . . . . . 3 - 18
3.6 CEC-Plus Replacement . . . . . 3 - 20

CHAPTER 4 Software Upgrade Instructions

4.1 Obtaining the Software Upgrade File . . . . . 4 - 2
4.1.1 Obtaining the Software Upgrade File via FTP . . . . . 4 - 2
4.2 Requirements for Upgrading with Mini Loader . . . . . 4 - 5
4.2.1 Downloading the Mini Loader Software . . . . . 4 - 6
4.2.2 Emptying the FLASH . . . . . 4 - 6
4.2.3 Upgrading the Switch to Mini Loader . . . . . 4 - 6
4.2.4 Deleting the Active Switch Software . . . . . 4 - 8
4.3 Performing the Software Upgrade . . . . . 4 - 9
4.3.1 Upgrading the Software Using TFTP . . . . . 4 - 9
4.3.2 Upgrading the Software Using FTP . . . . . 4 - 12
4.3.3 Upgrading the Software on a Standby SCP . . . . . 4 - 14
4.4 Changing between Multiple Versions of Software . . . . . 4 - 15
4.5 Booting and Upgrading with Mini Loader . . . . . 4 - 17
4.5.1 Setting the IP Address of the Switch . . . . . 4 - 20
4.5.2 Setting the Gateway Address . . . . . 4 - 20
4.5.3 Performing the Upgrade . . . . . 4 - 21
4.6 Using bootp to Download Software to the Switch . . . . . 4 - 23
4.6.1 Bootp Overview . . . . . 4 - 24
4.6.2 Setting Up a bootp Server . . . . . 4 - 24
4.6.3 Adding a Switch Entry in the bootptab File . . . . . 4 - 25
4.6.4 Setting Up a TFTP Server . . . . . 4 - 27
4.7 Booting via the Serial Port . . . . . 4 - 28
4.7.1 Requirements . . . . . 4 - 28
4.7.2 Performing the Serial Boot . . . . . 4 - 29

APPENDIX A Hardware Specifications

A.1 *TNX* ATM Switches . . . . . A - 1
A.1.1 *TNX*-210 . . . . . A - 2
A.1.2 *TNX*-1100 . . . . . A - 3
A.2 *TNX* ATM Network Modules . . . . . A - 4
A.2.1 ATM LAN and WAN Network Modules . . . . . A - 4
A.2.1.1 100 Mbps TAXI . . . . . A - 4
A.2.1.2 25.6 Mbps UTP25 . . . . . A - 5
A.2.1.2.1 Connecting Switches with TP25 Network Modules . . . . . A - 6
A.2.1.2.2 Connecting Switches with Token Ring Pinouts to *TNX* Switches . . . . . A - 6
A.2.1.2.3 Connecting Adapters with Token Ring Pinouts to *TNX* Switches . . . . . A - 7

A.2.1.3 1.5 Mbps DS1(Series C and D) . . . . . A - 8
A.2.1.3.1 DS1 Pinout Specifications . . . . . A - 9
A.2.1.4 45 Mbps DS3 (Series C and Series D) . . . . . A - 10
A.2.1.5 2 Mbps E1 (Series C and Series D) . . . . . A - 11
A.2.1.5.1 E1 Pinout Specifications . . . . . A - 12
A.2.1.6 6 Mbps J2 (Series C) . . . . . A - 13
A.2.1.7 34 Mbps E3 (Series C and Series D) . . . . . A - 14
A.2.1.8 155 Mbps STS-3c/STM-1 UTP (Series C and Series LC) . . . . A - 15
A.2.1.8.1 155 Mbps UTP Pinout Specifications . . . . . A - 16
A.2.1.8.2 Connecting Switches with 155 Mbps UTP Network Modules . . . . . A - 16
A.2.1.9 155 Mbps OC-3c/STM-1 MM (Series C, Series LC, and Series D) . . . . . A - 17
A.2.1.10 155 Mbps OC-3c/STM-1 SM (Series C, Series LC, and Series D) . . . . . A - 18
A.2.1.11 622 Mbps OC-12c/STM-4c MM (Series C, Series LC, and Series D) . . . . . A - 19
A.2.1.12 622 Mbps OC-12c/STM-4c SM (Series C, Series LC, and Series D) . . . . . A - 20
A.2.2 Mixed Mode Network Modules . . . . . A - 21
A.2.2.1 155 Mbps OC-3c/STM-1 3MM/1SM (Series C and Series D) . . . . . A - 21
A.2.3 Circuit Emulation Service (CES) Network Modules . . . . . A - 23
A.2.3.1 1.5 Mbps DS1 *VoicePlus* . . . . . A - 23
A.2.3.1.1 DS1 Pinout Specifications . . . . . A - 24
A.2.3.2 2 Mbps E1 *VoicePlus* . . . . . A - 25
A.2.3.2.1 E1 Pinout Specifications . . . . . A - 26
A.2.4 Frame Relay and FUNI Interworking Network Modules . . . . . A - 27
A.2.4.1 1.5 Mbps DS1 *FramePlus* . . . . . A - 27
A.2.4.1.1 DS1 Pinout Specifications . . . . . A - 28
A.2.4.2 2 Mbps E1 *FramePlus* . . . . . A - 29
A.2.4.2.1 E1 Pinout Specifications . . . . . A - 30

Acronyms

Glossary

Index

List of Figures

CHAPTER 1 Switch Hardware

Figure 1.1 *TNX*-210 Switch Configuration . . . . . 1 - 2
Figure 1.2 *TNX*-1100 Switch Configuration . . . . . 1 - 3
Figure 1.3 Switch Control Processor Front Panel . . . . . 1 - 7
Figure 1.4 RS-232 Serial Port Pinouts on an i960-based SCP . . . . . 1 - 8
Figure 1.5 RS-232 Serial Port Pinouts on a Pentium-based SCP . . . . . 1 - 8
Figure 1.6 Network Module Port Numbering . . . . . 1 - 16
Figure 1.7 Front View of a *TNX*-210's AC Power Supplies . . . . . 1 - 20
Figure 1.8 Front View of a *TNX*-210's DC Power Supplies . . . . . 1 - 21
Figure 1.9 Rear Panel of a DC-powered *TNX*-210 . . . . . 1 - 22
Figure 1.10 *TNX*-1100 AC Power Supply. . . . . 1 - 24
Figure 1.11 *TNX*-1100 DC Power Supply . . . . . 1 - 27
Figure 1.12 CEC Front Panel Status Indicators . . . . . 1 - 31
Figure 1.13 Alarm Relay Contacts for AL1 and AL2 . . . . . 1 - 32
Figure 1.14 CEC Status LEDs . . . . . 1 - 33
Figure 1.15 CEC Ethernet Port and LEDs . . . . . 1 - 35
Figure 1.16 CEC-Plus Timing Control Module (TCM) . . . . . 1 - 37
Figure 1.17 CEC-Plus Card Carrier . . . . . 1 - 39
Figure 1.18 TCM Hardware Features . . . . . 1 - 40
Figure 1.19 DB-25F Pin Locations. . . . . 1 - 41
Figure 1.20 DB-9F Control Port Pin Locations. . . . . 1 - 42
Figure 1.21 TCM Ethernet Port and LEDs. . . . . 1 - 44
Figure 1.22 BITS Clock Input and Output Ports. . . . . 1 - 45

CHAPTER 3 Hardware Maintenance Procedures

Figure 3.1 Removal of a Network Module . . . . . 3 - 3
Figure 3.2 Removal of an SCP . . . . . 3 - 16
Figure 3.3 Removal of the TCM. . . . . 3 - 20

CHAPTER 4 Software Upgrade Instructions

Figure 4.1 Example of Switch and Host on Different Subnets . . . . . 4 - 20

Preface

This manual provides the information needed to install *TNX* ATM Switches, *TNX* LAN and WAN network modules, and the accompanying *ForeThought*™ software. General product information is also provided. This document was created for users with various levels of experience. If you have any questions or problems with the installation, please contact FORE Systems' Technical Assistance Center (TAC).

Chapter Summaries

Chapter 1 - Switch Hardware - Provides a description of the *TNX* ATM switch hardware components.

Chapter 2 - Switch Setup - Provides information for the installation of a *TNX* switch and basic configuration procedures that should be performed before using your switch.

Chapter 3 - Hardware Maintenance Procedures - Describes hot-swap replacement procedures.

Chapter 4 - Software Upgrade Instructions - Describes how to configure a TFTP server, upgrade switch software, and change between multiple versions of software.

Appendix A - Hardware Specifications - Provides cabling, pinout, hardware, and general operating specifications for the *TNX* ATM switches and network modules.

Acronyms - Contains a list of common networking acronyms.

Glossary - Contains definitions for networking terms, both general and ATM-specific.

Technical Support

In the U.S.A., you can contact FORE Systems' Technical Assistance Center (TAC) using any one of the following methods:

1. Select the "Support" link from FORE's World Wide Web page:

   http://www.fore.com/

2. Send questions, via e-mail, to:

   support@fore.com

3. Telephone questions to "support" at:

   800-671-FORE (3673) or **724-742-6999**

4. FAX questions to "support" at:

   724-742-7900

Technical support for customers outside the United States should be handled through the local distributor or via telephone at the following number:

+1 724-742-6999

No matter which method is used to reach FORE Support, customers should be ready to provide the following:

- A support contract ID number
- The serial number of each product in question
- All relevant information describing the problem or question

Typographical Styles

Throughout this manual, all specific commands meant to be entered by the user appear on a separate line in bold typeface. In addition, use of the `Enter` or `Return` key is represented as `<ENTER>`. The following example demonstrates this convention:

`cd /usr <ENTER>`

File names that appear within the text of this manual are represented in the following style: "...the `fore_install` program installs this distribution."

Command names that appear within the text of this manual are represented in the following style: "...using the **`flush-cache`** command clears the bridge cache."

Subsystem names that appear within the text of this manual are represented in the following style: "...to access the **`bridge`** subsystem..."

Parameter names that appear within the text of this manual are represented in the following style: "...using *`<seg-list>`* allows you to specify the segments for which you want to display the specified bridge statistics."

Any messages that appear on the screen during software installation and network interface administration are shown in `Courier` font to distinguish them from the rest of the text as follows:

```
.... Are all four conditions true?
```

Important Information Indicators

To call your attention to safety and otherwise important information that must be reviewed to ensure correct and complete installation, as well as to avoid damage to the FORE Systems product or to your system, FORE Systems utilizes the following *WARNING/CAUTION/NOTE* indicators.

WARNING statements contain information that is critical to the safety of the operator and/or the system. Do not proceed beyond a **WARNING** statement until the indicated conditions are fully understood or met. This information could prevent serious injury to the operator, damage to the FORE Systems product, the system, or currently loaded software, and is indicated as follows:

WARNING!

Hazardous voltages are present. To reduce the risk of electrical shock and danger to personal health, follow the instructions carefully.

CAUTION statements contain information that is important for proper installation/operation. Compliance with **CAUTION** statements can prevent possible equipment damage and/or loss of data and are indicated as follows:

CAUTION

You risk damaging your equipment and/or software if you do not follow these instructions.

NOTE statements contain information that has been found important enough to be called to the special attention of the operator and is set off from the text as follows:

If you change the value of the LECS control parameters while the LECS process is running, the new values do not take effect until the LECS process is stopped, and then restarted.

Laser Warning

Every FORE Systems network module having a single mode fiber optic interface contains a Class 1 laser.

Class 1 Laser Product:
This product conforms to applicable requirements of 21 CFR 1040 at the date of manufacture.

Class 1 lasers are defined as products which do not permit human access to laser radiation in excess of the accessible limits of Class 1 for applicable wavelengths and durations. These lasers are safe under reasonably foreseeable conditions of operation.

WARNING!

Do not stare into the beam or view the beam with optical instruments.

NOTE

This Laser Warning Notice only applies to products or components containing Class 1 lasers.

Safety Precautions

For your protection, observe the following safety precautions when setting up equipment:

- Follow all warnings and instructions marked on the equipment.
- Ensure that the voltage and frequency of your power source matches the voltage and frequency inscribed on the equipment's electrical rating label.
- Never push objects of any kind through openings in the equipment. Dangerous voltages may be present. Conductive foreign objects could produce a short circuit that could cause fire, electric shock, or damage to your equipment.

Modifications to Equipment

Do not make mechanical or electrical modifications to the equipment. FORE Systems, Inc., is not responsible for regulatory compliance of a modified FORE product.

Placement of a FORE Systems Product

CAUTION

To ensure reliable operation of your FORE Systems product and to protect it from overheating, openings in the equipment must not be blocked or covered. A FORE Systems product should never be placed near a radiator or heat register.

Power Cord Connection

WARNING!

FORE Systems products are designed to work with single-phase power systems having a grounded neutral conductor. To reduce the risk of electrical shock, do not plug FORE Systems products into any other type of power system. Contact your facilities manager or a qualified electrician if you are not sure what type of power is supplied to your building.

WARNING!

To reduce the risk of electric shock, always plug the cord into a grounded power outlet.

CHAPTER 1 Switch Hardware

The *TNX*-210 ATM switch, and the *TNX*-1100 ATM switch offer high reliability and port density for the edge and core of multiservice backbone networks. Together with the network modules and *ForeThought* software, these switches meet the networking demands of today's distributed, time-critical applications.

Both *TNX* ATM switches deliver high-performance switching capacity and speed for ATM applications. The *TNX*-210 provides 2.5 Gbps of non-blocking switching capacity and supports up to 32 ATM ports ranging in speeds from 155 Mbps to 622 Mbps. For applications requiring greater capacity, the *TNX*-1100is a scalable 2.5 Gbps to 10 Gbps backbone switch supporting up to 128 ATM ports.

A complete range of LAN and WAN ATM network modules is available with the *TNX*-210 and *TNX*-1100 including 25 Mbps, T1, E1, J2, DS3, E3, 155 Mbps SONET/SDH (both UTP Category 5 copper and fiber), 622 Mbps OC-12c/STM-4c ATM, as well as Circuit Emulation and Frame-to-Cell Internetworking solutions.

Interconnecting multiple *TNX* switches at various speeds is simple. Once a new switch is added to the network, all other switches recognize its presence and dynamically establish connections to ports on the new switch. Furthermore, scaling the network is accomplished without costly and time consuming address reconfiguration.

This chapter provides an overview of the *TNX*-210 and *TNX*-1100 ATM switches. It details the individual hardware components available on each switch.

NOTE For information about the technical and operating specifications, see Appendix A, "Hardware Specifications".

1.1 Switch Hardware Configurations

The *TNX*-210, as shown in Figure 1.1, is a self-contained ATM switch that provides an Ethernet connection for network management access. The *TNX*-210 hardware consists of a single switch board with either an i960-based SCP or an SCP-ASXP5 (single or dual configuration), up to four network modules, redundant power supplies, and internal fans. These components work together to provide ATM switching capabilities, as well as distributed connection setup and management.

Figure 1.1 - *TNX*-210 Switch Configuration

The *TNX*-1100, as shown in Figure 1.3, is a self-contained ATM switch that provides an Ethernet connection on each SCP for network management access. A single, unified Ethernet connection is also provided on the CEC-Plus. The hardware for the *TNX*-1100 consists of up to four SM-1100-B switch fabrics with either an i960-based SCP, an SCP-ASXP5, or an SCP-P5-266 (single or dual configuration); up to a total of 16 network modules; redundant power supplies; a CEC-Plus; and a removable fan tray. These components work together to provide ATM switching capabilities, as well as distributed connection setup and management.

Figure 1.2 - *TNX*-1100 Switch Configuration

1.2 Switch Hardware Components

The following subsections describe the hardware components for the *TNX*-210 and *TNX*-1100. Depending on the type of switch, most components are hot-swappable. For information on hot-swapping, see Chapter 3, ”Hardware Maintenance Procedures.”

1.2.1 Switch Fabric

1.2.1.1 Switch Fabric

The switch fabric (also referred to as the “switch board”) contains the VPI/VCI lookup tables and routing circuitry to ensure that a cell received from an input port is correctly switched to one or more output ports. The *TNX*-210 comes with one switch fabric, which can contain up to four network modules. Each network module can contain up to eight ports, depending on the type of network module. The switch fabric also has an interface called the control port, which is directed by the SCP and is functionally equivalent to an ATM host interface.

1.2.1.2 SM-1100 Switch Fabric

The *TNX*-1100 can be populated with as many as four switch fabrics. Each switch fabric can contain up to four network modules, which themselves can contain up to eight ports each, depending on the type of network module. The switch fabric also has an interface called the control port, which is directed by the SCP and is functionally equivalent to an ATM host interface.

On a SM-1100 switch fabric, the egress connection ID space is divided into four 8K sections for a total of 32K VCs. One 8K section is used for connections within the local fabric and the other three 8K sections are used for connections going to each of the three other fabrics. The four network module interfaces on the fabric share a 32K ingress VC space.

1.2.1.3 SM-1100-B Switch Fabric

The *TNX*-1100 can be populated with as many as four switch fabrics. Each switch fabric can contain up to four network modules, which themselves can contain up to eight ports each, depending on the type of network module.

The SM-1100-B fabrics in the *TNX*-1100 maintain the non-blocking architecture and features of the SM-1100 fabrics, while offering the following traffic management performance improvements:

- Switch fabric output queues shared by four network modules can store 32K cells.
- The switch fabric output queue to the network module interface can supply up to 2.5Gbps of bandwidth to any Series LC network module.
- There is support for 128K interfabric connections with 32K from any single fabric.
- Partial Packet Discard at the input stage of the switch fabric. If a cell is discarded due to bandwidth policing, the input stage of the switch discards the remaining cells of that packet. This helps to increase “goodput” through the switch by discarding additional cells that would otherwise need to be retransmitted.
- Packet Level Policing occurs at the input stage of the switch fabric.
- There is support for burst mode accesses by the SCP.

On a SM-1100-B switch fabric, the egress connection ID space is divided into four 32K sections for a total of 128K VCs. Therefore, any single fabric has the potential to handle all four fabrics’ ingress capabilities. One 32K section is used for connections within the local fabric and the other three 32K sections are used for connections going to each of the three other fabrics. Like the SM-1100 switch fabric, the four network module interfaces on the SM-1100-B switch fabric share a 32K ingress VC space.

1.2.2 Switch Control Processor

The switch control processor (SCP) provides the distributed connection setup for a network of ATM switches. The SCP primarily provides management access through SNMP and is responsible for storing and updating all SNMP management information. Additionally, the SCP has direct access to the switch board (one SCP per switch board). The SCP and associated software, manages the behavior of the switch board (i.e., connection setup), but is not involved in the actual cell switching.

There are two different types of SCPs available: i960-based and Pentium-based. The i960-based SCPs include the CA, CF, and HA versions. The Pentium-based SCPs include the P5 and P266 versions. Table 1.1 lists the specific features of each SCP type and version:

Table 1.1 - Switch Control Processor Features

SCP Type	Version	Software Version Supported	Features
i960-based	CA	supported through 5.3.x	8 or 16MB DRAM Intel 80960CA processor, 20Mhz local bus, 4MB FLASH
	CF	supported through 5.3.x	16MB DRAM Intel 80960CF processor, 20MHz local bus, 4MB FLASH
	HA-16	4.1.x through 6.0.x	16MB DRAM Intel 80960HA processor, 40MHz local bus, 4MB FLASH
	HA-32	5.3.x and higher with specific patch builds for 4.1.x, 5.0.x, 5.1.x, 5.2.x.	32MB DRAM Intel 80960HA processor, 40MHz local bus, 8MB FLASH
Pentium-based	P5	5.1.x and higher with specific patch build for 5.0.x	64 MB DRAM Intel Pentium processor with MMX technology, 66MHz local bus, 8MB of FLASH
	P266[1]	6.0.x	64 MB DRAM Intel Pentium processor with MMX technology, 66MHz local bus, 16MB of FLASH

1. The P266 model is only supported in the *TNX*-1100.

Table 1.2 shows which SCP type and switches are compatible:

Table 1.2 - SCP and Switch Platform Compatibility

SCP Version	*TNX*-210	*TNX*-1100
CA	N / A	N / A
CF	N / A	N / A
HA-16	yes	yes
HA-32	yes	yes
P5	yes	yes
P266	no	yes

The front panel of an SCP includes the following features: a RESET button, an RS-232 serial port, an Ethernet 10BaseT port, a NEXT pushbutton, a SELECT pushbutton, a display LED, and a power LED. All of the features are illustrated in Figure 1.3 and are described in the sub-sections that follow.

NOTE

The front panel of a P266 SCP is slightly different from other SCPs. The Ethernet port LEDs are labeled Act (Activity) and Li (Link Status) instead of TX and RX. See Section 1.2.2.3 for more information.

Figure 1.3 - Switch Control Processor Front Panel

1.2.2.1 RESET Button

The RESET button allows the user to reset the switch control software on the SCP. Using RESET boots the SCP and runs the initial power-on diagnostics. All open AMI sessions are ended by the SCP, and all connections are torn down and the ports initially go off-line after a reset. PVCs, PVPs, SPVCs, and SPVPs return to the configuration stored in the configuration database (CDB). If PVC/PVP connection preservation has been enabled, all PVCs and PVPs that are listed in the CDB (and found to be intact in the hardware) are maintained without disruption of cell flow when the switch is reset. For more information on connection preservation, see Part 2 of the *AMI Configuration Commands Reference Manual.*

Because the RESET button is small (to avoid accidental resets), it is recommended that you use a straightened paper clip to push the RESET button.

1.2.2.2 RS-232 Serial Port

The RS-232 serial port provides access for any VT100 (or similar) terminal or terminal emulation package to the SCP. The serial port for the i960-based SCP has a standard DB-9 female connector and the Pentium-based SCP has a standard DB-9 male connector.

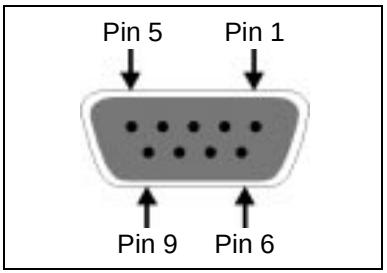

Figure 1.4 - RS-232 Serial Port Pinouts on an i960-based SCP

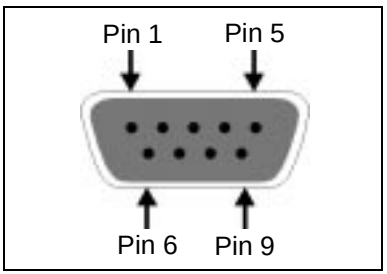

Figure 1.5 - RS-232 Serial Port Pinouts on a Pentium-based SCP

Table 1.3 describes the i960-based and Pentium-based SCP RS-232 serial port pinouts that are illustrated in Figure 1.4 and Figure 1.5.

Table 1.3 - RS-232 Serial Port Pinouts

Pin Number	Signal Mnemonic	Signal Name
1	DCD	Data Carrier Detect
2	RXD	Receive Data
3	TXD	Transmit Data
4	DTR	Data Terminal Ready
5	GND	Signal Ground
6	DSR	Data Set Ready
7	RTS	Request to Send
8	CTS	Clear to Send
9		Not Used

1.2.2.3 Ethernet 10BaseT Port

The Ethernet 10BaseT port on the front panel of the SCP has a standard RJ45 connector. On all SCPs except for the P266 Pentium SCP, there is a transmit LED to the left of this port and a receive LED to the right. On the P266, there is an Activity LED to the left of this port and a Link Status LED to the right.

1.2.2.3.1 Ethernet LEDs on CA, CF, HA, and P5 SCPs

The following tables describe the states of the LEDs and their meanings:

Table 1.4 - Ethernet 10BaseT Transmit (TX) LED Description

LED Color	Meaning
red	There is a collision on the port.
green	The port is transmitting normally.

Table 1.5 - Ethernet 10BaseT Receive (RX) LED Description

LED Color	Meaning
green	The port is receiving normally.

1.2.2.3.2 Ethernet LEDs on the P266 SCP

The following tables describe the states and meanings of the Activity and Link Status LEDs on the P266 SCP:

Table 1.6 - Ethernet 10BaseT Activity (Act) LED Description

LED Color	Meaning
amber	The port is transmitting/receiving normally. When the *TNX*-1100 is configured with a CEC-Plus, this LED remains illuminated since there is communication between the SCP and CEC-Plus. See Section 1.2.9 for more information on the CEC-Plus.
off	There is a collision on the port or there is no Ethernet activity.

Table 1.7 - Ethernet 10BaseT Link Status (Li) LED Description

LED Color	Meaning
green	The Ethernet link is up.
off	The Ethernet link is down.

1.2.2.4 CTL Port

A control port inside the SCP, referred to in the switch software as the CTL port, is a logical (not physical) location where cells that are directed to the SCP itself are sent. The CTL port has two roles, serving as both a host and a switch board controller. All signalling from the switch host and every attached host must interact with the switch board controller.

1.2.2.5 NEXT Pushbutton

The NEXT pushbutton lets you scroll through the menu that is shown on the display LED after the power is turned on or after the SCP is reset/rebooted. See Section 1.2.2.7 for more information about the options that are shown on the display LED.

1.2.2.6 SELECT Pushbutton

The SELECT pushbutton lets you choose an option from the menu that is shown on the display LED after the power is turned on or after the SCP is reset/rebooted. See Section 1.2.2.7 for more information about the options that you can choose on the display LED.

1.2.2.7 Display LED

During the boot process and the initial power-on diagnostics, the display LED shows messages about what is happening to the SCP. For example, if you plug an SM-1100-B fabric into an enclosure that already contains *TNX*-1100 fabrics, an error message that reads `Incompatible fabric` is shown on the front panel display.

It also shows the menu choices for the NEXT and SELECT pushbuttons after the power is turned on or after the SCP is reset/rebooted. To access the menu choices listed below, press the NEXT pushbutton while the switch is booting until the mode you want to access is shown on the display LED. Then, press the SELECT pushbutton to select your choice. The menu choices shown on the display LED are defined as follows:

Flash ? When selected, the SCP attempts to boot from a FLASH file. If there is more than one FLASH image on the file, each bootable image is displayed and you can select the image you want to boot. If there is only one FLASH image, selecting `Flash?` would be the same as if you selected `Auto?`. If the boot from FLASH is unsuccessful, then the SCP tries to perform an Ethernet boot. On an i960HA SCP, choosing `Flash?` will drop you to a submenu where you can select `Default?`, `FrPanel?` or a software version.

Ethernt ? When selected, the SCP uses the bootp protocol to get the IP address and boot file name from the bootp server. It downloads the tar file, decompresses it, and executes it. On a Pentium-based SCP, if the Ethernet boot is unsuccessful, the SCP goes to `VXMon` mode.

Monitor ? When selected, the user can connect a terminal to the serial port and run the hardware self-diagnostics that are described in the *ATM Switch Diagnostics and Troubleshooting Manual*.

Auto ? When selected, the SCP automatically boots from the FLASH file. If this is unsuccessful, then the SCP tries to perform an Ethernet boot.

Options ? This menu choice only displays for an i960HA SCP. When selected, this takes you to a sub-menu where you can select `ShowMac?` or `TopMenu`. `TopMenu` takes you back to the main menu level.

ShowMac ? When selected, the SCP's MAC address is scrolled across the LED display. The scroll can be interrupted by pushing the NEXT pushbutton again and the boot process can be resumed from there.

After the boot process and self-diagnostics are complete, if a name has been assigned to the switch, the name is shown on the display LED during normal operations. If a switch name has not been assigned, it will display `ATM SWITCH`. For information on creating or modifying the switch name, please see Part 2 of the *AMI Configuration Commands Reference Manual*. After an initialization of the CDB (using the **`oper cdb init`** command), it will display `Unknown`.

1.2.2.8 Power LED

The power LED to the right of the display LED reflects the current state of power to the SCP. Table 1.8 describes the states of the power LED and their meanings.

Table 1.8 - Power LED Description

LED Color	Meaning
red	The SCP is in reset.
green	The SCP is powered up.
off	There is no power to the SCP.

1.2.2.9 Dual SCP Configuration

This section explains SCP failover support, available when two SCPs of the same type are installed in a single *TNX*-210 or *TNX*-1100 switch board. For information about configuring dual SCPs via AMI, see Part 2 of the *AMI Configuration Commands Reference Manual*.

WARNING!

Only the i960HA, P5, and P266 SCPs support dual configuration. Using an i960CA or i960CF in a redundant configuration can cause irreparable damage to your switch board.

When using dual SCP configuration, you must either use two i960HAs, or two P5s, or two P266s in the same switch board. Do not use one of each. However, since the *TNX*-1100 can have up to four switch boards, you can have two i960HAs in one board, two P5s in another board, and two P266s in another board.

CAUTION

Both HA SCPs must have the same FLASH size (both 4 MB or both 8 MB) and the same DRAM size (both 16 MB or both 32 MB). Otherwise, failover cannot occur.

When two SCPs are installed in a switch board, the switch recognizes their presence and automatically runs in dual SCP mode. When the switch boots, the SCP which resides in slot X is designated as the primary SCP by default. The SCP which resides in slot Y is designated as the secondary SCP by default. This designation can be altered via AMI.

NOTE

The primary SCP and the controlling are not necessarily the same. “Primary” refers to the SCP that is supposed to control the switch after it boots. “Controlling” refers to the SCP that actually controls the switch. For example, if the SCP in slot X fails at start-up, the SCP in slot Y will control the switch even though it is not designated as the primary SCP.

While in dual SCP mode, the controlling SCP emits a “heartbeat” at regular intervals. This heartbeat is monitored by the standby SCP. In the event of a hardware failure on the controlling SCP, the heartbeat disappears and the standby SCP takes over. If a failure is detected on the controlling SCP, the standby SCP takes control of the board. At an SCP failover, PVC connections are dropped, and any SVCs that had been established are torn down at the switch. Once the standby SCP takes control of the switch board, PVCs will be re-established (according to the “last-synchronized” CDB), and end-stations will signal the switch to create new SVCs. The larger the CDB (e.g., number of PVCs), the longer the standby SCP will take to fully restore the switch. If PVC/PVP connection preservation is enabled, all PVCs and PVPs that are listed in the CDB (and found to be intact in the hardware) are maintained without disruption of cell flow. For more information on connection preservation, see Part 2 of the *AMI Configuration Commands Manual*.

A replacement standby SCP of the same SCP type as the primary SCP can be hot-inserted into the slot from which a failed SCP was removed. Switch configuration information (i.e., CDB configuration, FLASH configuration, etc.) can be synchronized at regular intervals between the controlling and standby SCP. This information is maintained if SCP failover occurs.

NOTE

Dual SCP failover and automatic CDB synchronization does NOT occur when dissimilar SCPs are used together in a switch board. Dissimilar SCPs are those that are different types (e.g., HA, P5, P266), or those that have different FLASH sizes or DRAM sizes. If dissimilar SCPs are installed in the same switch board, the controlling SCP instructs the standby SCP not to take over the switch if the controlling SCP fails. The standby SCP does not even take over the switch when the controlling SCP is removed. Instead, the standby SCP with failover disabled displays the string `*DSABLE*` on the front panel LED. See the release notes that came with your SCP for more information.

NOTE

For proper synchronization of information between SCPs, ensure that the amount of free space on both SCPs is roughly equal before performing these commands.

CAUTION

When the FLASH is synchronized, all files that are not present on the controlling SCPs' FLASH are immediately deleted from the standby SCP. If there is not enough free space on the standby SCP, the controlling SCP deletes old files from the standby SCP. This may include older copies of the OS, or even the current copy if the OS itself is being synchronized. These files are removed even if `autoremove` is disabled. However, if there is still not enough free space on the FLASH of the standby SCP, and there are no more files that can be deleted, the synchronization attempt fails.

NOTE

For information on hot-swapping SCPs, see Chapter 3, "Hardware Maintenance Procedures."

When the switch is running in dual mode, a reboot request on the controlling SCP (i.e., after a software upgrade) will not cause the standby SCP to take control of the switch. Instead, the controlling SCP will send a pause signal to the standby SCP. This pause request will force the standby SCP to disregard the absence of the controlling SCP for two minutes. Once the controlling SCP comes back up, both SCPs will assume normal, dual mode operation.

While in dual mode, the controlling SCP continually monitors the presence of the standby SCP. If the controlling SCP fails to detect a second SCP, the controlling SCP disables all synchronization and runs in standalone mode (not dual).

1.2.3 Ethernet Connection

When two SCPs are installed in a *TNX*-210, Ethernet connectivity is only available if the Ethernet port on each SCP is physically connected to the network. If dual SCP mode is utilized on a *TNX*-1100, the Ethernet connection can be made using the individual SCPs or the Ethernet port on the *TNX*-1100's Common Equipment Card (CEC). For more information about the CEC, see Section 1.2.8.

If the SCP is accessed via ATM, the Ethernet connection is not necessary.

NOTE

If two SCPs are installed in a switch board, each SCP must have its own entry in the bootptab file (used for network booting) and a unique IP address. Using only one entry (i.e., the same IP address) causes unpredictable Ethernet ARP behavior (see Section 4.6 in Chapter 4 for more information).

1.2.4 Network Modules

The network modules in a switch act as the physical input/output ports to the switch board. A network module can have up to eight physical ports, depending on its configuration.

1.2.4.1 Port Numbering

The individual ports on a network module are numbered according to the Board-Network Module-Port (BNP) notation.

Board Refers to the number of the switch board that contains the port being numbered. `Board` is always 1 in a *TNX*-210 since it contains only one switch board. `Board` can be 1, 2, 3, or 4 in a *TNX*-1100, depending on the number of the physical switch board that contains the port being numbered.

Network Module Refers to the slot (A, B, C, or D) in the switch board that contains the port being numbered.

Port Refers to the physical port (1 - 8) being numbered on the individual network module.

For example, according to this notation, the fourth port on a network module in slot B of switch board #2 is port 2B4.

Figure 1.6 illustrates how the ports of various network modules, located in switch board #4 of an *TNX*-1100, for example, would be numbered.

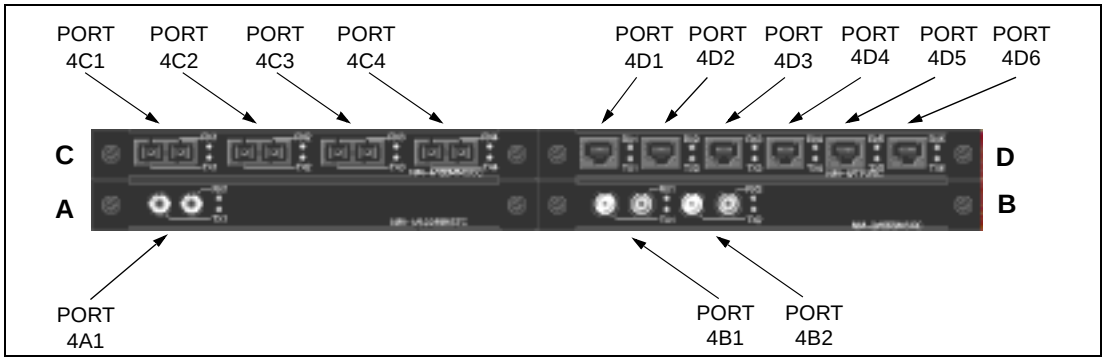

Figure 1.6 - Network Module Port Numbering

NOTE For information about the technical and operating specifications for the network modules, see Appendix A in this manual.

1.2.4.2 Network Module LED Indicators

Table 1.9 describes the possible states and meanings for the LEDs on the front panels of the network modules.

Table 1.9 - Network Module LED Indicators

Network Module Type	Indicator	State	Meaning
SONET - LAN1	Transmit	Green or Extinguished	In normal operation this LED is flashing green indicating traffic flow, either input or output. AMI displays this as AUTO.
		Red	N / A
		Yellow	N / A
	Receive	Green or Extinguished	In normal operation this LED is flashing green indicating traffic flow, either input or output. AMI displays this as AUTO.
		Red	Either Loss of Signal (LOS) or Loss of Frame (LOF) or Line Alarm Indication Signal (AIS_L) OR (Path Loss of Pointer (LOP_P) or Path UNEQ (UNEQ_P) or Path Label Mismatch (PLM_P) or Loss of Cell Delineation (LCD)) AND (not Path Alarm Indication Signal (AIS_P))
		Yellow	RDI_L

Table 1.9 - Network Module LED Indicators (Continued)

Network Module Type	Indicator	State	Meaning
SONET - WAN1	Transmit	Green	In normal operation this LED is solid green indicating traffic flow, either input or output.
		Red	N / A
		Yellow	N / A
	Receive	Green	In normal operation this LED is solid green indicating traffic flow, either input or output.
		Red	Either LOS or LOF or AIS_L OR (LOP_P or UNEQ_P or PLM_P or LCD) AND (not AIS_P)
		Yellow	RDI_L
SONET - LAN2	Transmit	Green or Extinguished	In normal operation this LED is flashing green indicating traffic flow, either input or output. AMI displays this as AUTO.
		Red	Line Remote Defect Indication (RDI_L)
		Yellow	Path Remote Defect Indication (RDI_P)
	Receive	Green or Extinguished	In normal operation this LED is flashing green indicating traffic flow, either input or output. AMI displays this as AUTO.
		Red	Either LOS or LOF or AIS_L
		Yellow	AIS_P or LOP_P or UNEQ_P or PLM_P or LCD
SONET - WAN2	Transmit	Green	In normal operation this LED is solid green indicating traffic flow, either input or output.
		Red	RDI_L
		Yellow	RDI_P
	Receive	Green	In normal operation this LED is solid green indicating traffic flow, either input or output.
		Red	Either LOS or LOF or AIS_L
		Yellow	AIS_P or LOP_P or UNEQ_P or PLM_P or LCD

Table 1.9 - Network Module LED Indicators (Continued)

Network Module Type	Indicator	State	Meaning
DS1, DS3, E1, E3, J2, TAXI, TP25	Transmit	Off	No cells are being transmitted from the port.
		Green	Cells are being transmitted on the port.
	Receive	Off	Carrier has been detected on the line. A carrier is detected when there is a proper voltage signal on the line.
		Green	Cells are being received on the port.
		Red	There is a loss of carrier.
CESDS1, CESE1 (*VoicePlus* network modules)	Transmit	Green	Physical link operating properly and no alarms present
		Red	Uninitialized
	Receive	Green	Physical link operating properly and no alarms present
		Yellow	RDI
		Red	Uninitialized; LOS, LOF, AIS, or OOF present
IWFDS1, IWFE1 (*FramePlus* network modules)	Transmit	Off	Synchronization
		Green	Interface up and synchronized
		Yellow	Loss of carrier or LOF, LOS, AIS, or OOF present
		Red	Board failure
	Receive	Green	Interface up and synchronized
		Yellow	Alarm condition
		Red	Loss of carrier or board failure or LOF, LOS, AIS, or OOF present

1.2.5 Power Supply Modules

The *TNX*-210 and the *TNX*-1100 each come with two removable AC or DC power supply modules. In the event of a single power supply failure, the power supply indicator LED(s) on the front panel of the supplies will indicate the failed supply. The failed power supply can be removed and replaced while the other supply continues to provide power to the switch. In this manner, a single power supply failure will not cause the switch to stop functioning.

1.2.5.1 *TNX*-210 AC Power Supply

The *TNX*-210 has two power supply LEDs, one for each removable, hot-swappable power supply. Each LED is located to the left of the power switch on the front panel for that supply as shown in Figure 1.7 below.

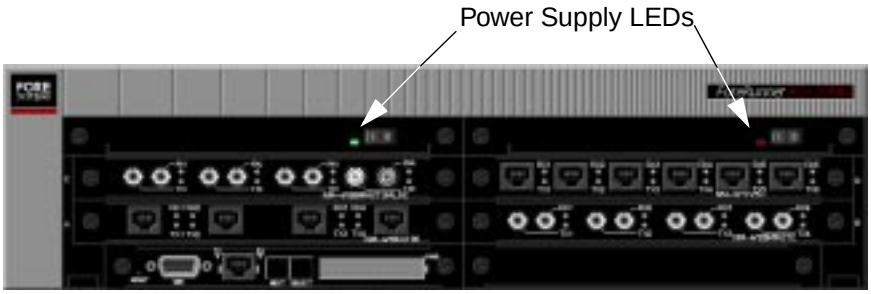

Figure 1.7 - Front View of a *TNX*-210's AC Power Supplies

The LED on the AC power supply is green under normal circumstances, indicating that the 5-volt supply coming from that particular power supply is functioning properly.

CAUTION

If the power supply LED is red, the faulty supply should be turned off as soon as possible, using the single power switch which controls power to that supply. The problem should then be diagnosed and repaired. For details about how to hot-swap a power supply in the *TNX*-210, please refer to Chapter 3, ”Hardware Maintenance Procedures.”

NOTE

A replacement AC power supply will not function in a DC-equipped *TNX*-210, and vice-versa. However, no damage will be done if this occurs.

1.2.5.2 *TNX*-210 -48 Volt DC Power Supply

The *TNX*-210 has two power supply LEDs, one for each removable, hot-swappable power supply. Each LED is located to the left of the power switch on the front panel for that supply as shown in Figure 1.8.

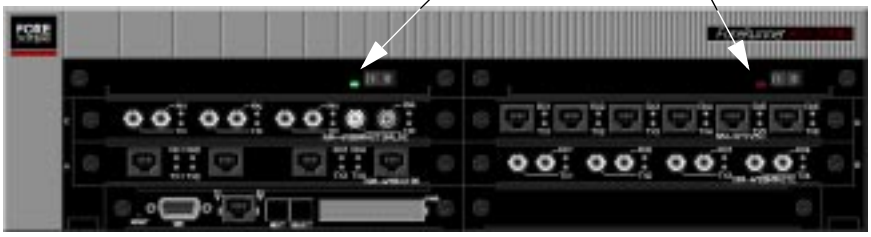

Figure 1.8 - Front View of a *TNX*-210’s DC Power Supplies

On the DC power supply for the *TNX*-210, the LED is green under normal circumstances, indicating that the 5-volt supply coming from that particular power supply is functioning properly.

CAUTION

If the power supply LED is red, the faulty supply should be turned off as soon as possible, using the single power switch which controls power to that supply. The problem should then be diagnosed and repaired. For details about how to hot-swap a power supply in the *TNX*-210, please see Chapter 3, ”Hardware Maintenance Procedures.”

NOTE

A replacement DC power supply will not function in an AC-equipped *TNX*-210, and vice-versa. However, no damage will be done if this occurs.

On the back of a DC-equipped *TNX*-210, there are two three-terminal barrier terminal strips, one for each -48 volt DC power supply, as shown in Figure 1.9. The screw terminals are #6 screws. The -48 volt feed wires should be attached to the terminal strips using wire terminals designed to fit #6 studs. FORE Systems recommends using either ring terminals or locking forked tongue terminals. Wire gauge should be AWG #16 or larger. Power feed should be limited to 10A maximum.

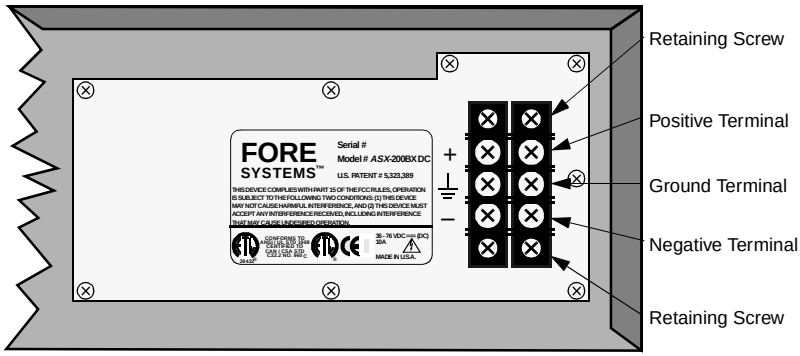

Figure 1.9 - Rear Panel of a DC-powered *TNX*-210

CAUTION

Be sure to observe polarity. Failure to do so may cause permanent damage to the unit.

NOTE

The DC-powered *TNX*-210 is designed to be connected to a -48V DC power source.

The higher potential wire (power) should be connected to the positive (+) terminal, and the lower potential wire (battery return) to the negative (–) terminal. A third, chassis ground wire should be secured to the center terminal (⏚) and connected to an earth ground.

WARNING!

This power supply module is intended for -48 VDC nominal applications. It is recognized that transient voltages fluctuations may occur which will make this nominal value appear higher or lower. The lower rating is 36 VDC and the upper limit is 72 VDC. Voltages greater than 60 VDC are considered hazardous and have a increased risk of causing personal injury. It is for this reason that increased safety precautions must be taken when this supply is installed where the voltages may exceed 60 VDC for any period of time. FORE requires the use of a power source rated for at least 72 VDC. In these cases, as in all installations, the chassis must be earth grounded according to the intended topology and local requirements.

NOTE

The *TNX*-1100 model A AC power supplies are not supported in an *TNX*-1100 with an *TNX*-1100-B switch board. You must upgrade to the model B AC power supplies if using an *TNX*-1100-B switch board.

1.2.5.3 *TNX*-1100AC Power Supply

The AC power supply for a *TNX*-1100 is shown in Figure 1.10.

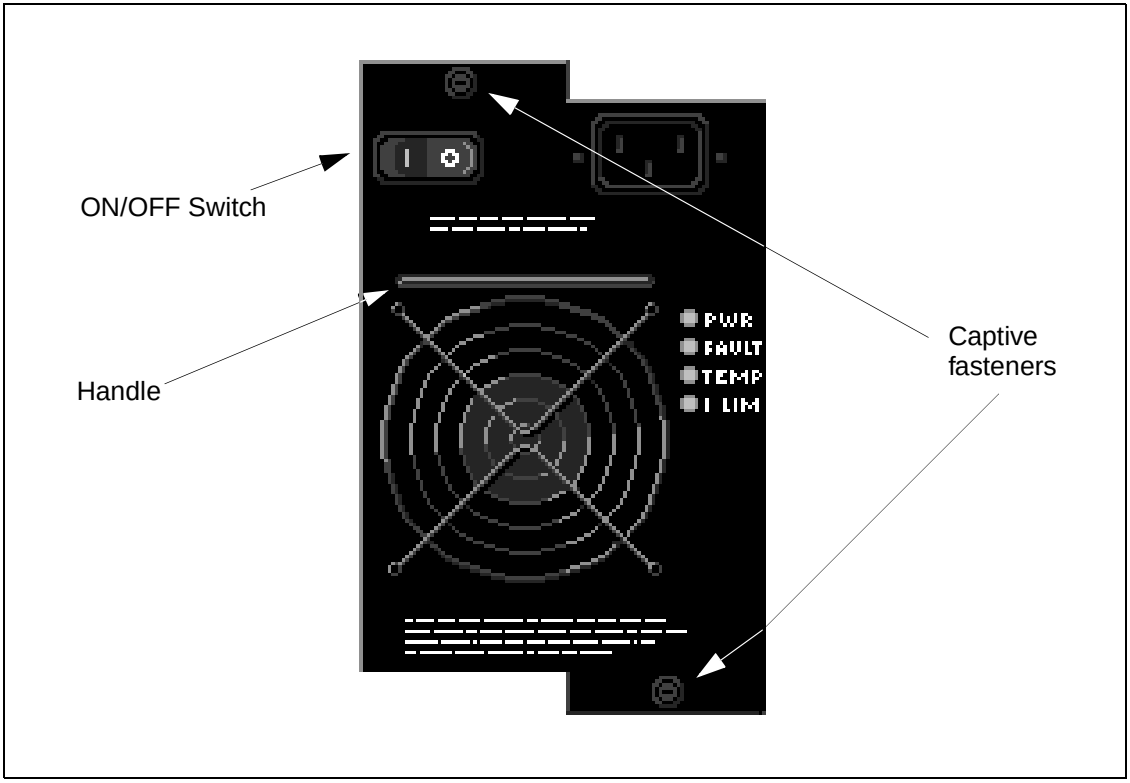

Figure 1.10 - *TNX*-1100 AC Power Supply

1.2.5.3.1 Power Supply LEDs

There are four LEDs on the front panel of the *TNX*-1100 AC power supply which indicate the status of the power supply. The LEDs and their functions are described in Table 1.10:

Table 1.10 - *TNX*-1100AC Power Supply LED Descriptions

LED	Color	Meaning
PWR OK	Green	Input voltage is OK
	extinguished	No input voltage or unit has shut down
FAULT	Yellow	Power supply has faulted
	extinguished	No faults detected in power supply
TEMP	Yellow	Operating temperature out of range
	extinguished	Running within safe temperature range
I LIM	Yellow	Overload condition
	extinguished	Load in range

1.2.5.3.2 Shutdown Conditions

To avoid damaging itself or the switch, the *TNX*-1100 AC power supply shuts itself down under the following error conditions:

Input undervoltage The AC line voltage is below 87 ±5VAC RMS.

Output undervoltage Output 1 is 42 ±2 VDC or Output 2 is below 4.5 ±0.25 VDC. Shutdown from undervoltage is defeated during power-up period (2 seconds maximum) to allow slow-start.

Output overvoltage The voltage at Output 1 or Output 2 is above 125% ±8% of the nominal voltage.

Overtemperature Any power semiconductor has reached 90% of its maximum junction temperature.

NOTE The *TNX*-1100 CEC can not shut down the power supply. Only the power supply can shut down and restart itself.

If a power supply goes into shutdown, it remains turned off until the fault condition is rectified. At that point, the power supply restarts itself, except in the case of an overvoltage condition.

To recover from a shutdown caused by an overvoltage state, the AC line input must be turned off for at least one second.

WARNING!

A replacement AC power supply should never be placed in a *TNX*-1100 that already contains a DC power supply, and vice-versa. If these instructions are not heeded, there is a risk of electrical shock, danger to personal health, and serious damage to the equipment.

If the power supply needs to be replaced, please refer to Section 3.2 in Chapter 3 for hot-swap information.

1.2.5.4 *TNX*-1100 -48 Volt DC Power Supply (PS-1000/DC-B)

The DC power supply for a *TNX*-1100 is shown in Figure 1.11.

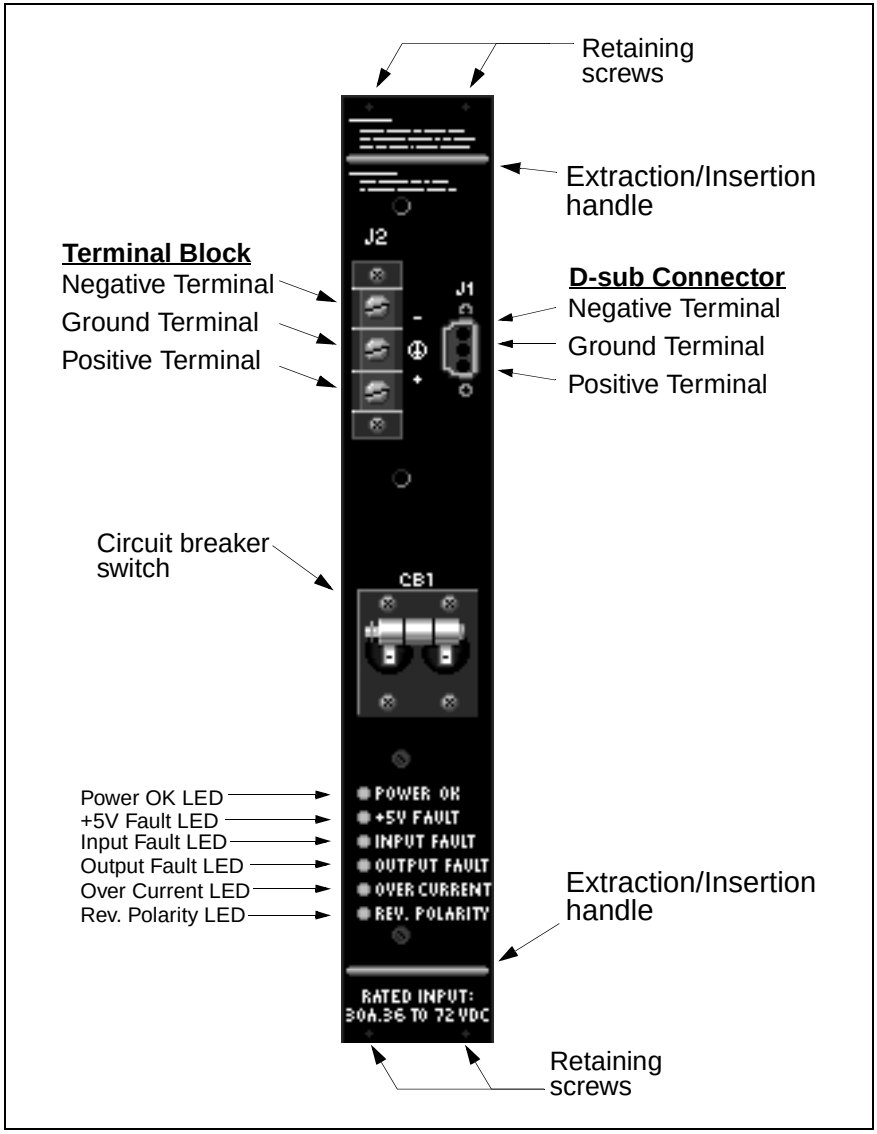

Figure 1.11 - *TNX*-1100 DC Power Supply

On the front panel of the PS-1000 DC power supply, there is a three-screw terminal block connector and a male, three-pin D-subminiature power connector. Each connector is covered when the power supply is shipped from FORE Systems.

NOTE

An unused power connector should always be kept covered.

The terminal block screws are #10 screws. The -48V feed wires should be attached to the block using wire terminals designed to fit #10 studs. FORE Systems recommends using either ring terminals or locking forked tongue terminals. Wire gauge should be no smaller than AWG #10 and no larger than AWG #6.

The three-pin D-subminiature connector should be attached to a -48 volt power source with appropriately sized wire utilizing a female, three-pin connector.

CAUTION

Be sure to observe polarity when attaching the wire leads to the terminals.

Each connector (i.e., the terminal block and the 3-pin D-sub) is oriented in the same way: negative terminal on top, ground terminal in the middle, and positive terminal on the bottom.

NOTE

The DC-powered *TNX*-1100 is designed to be connected to a -48V DC power source.

The higher potential wire (Grnd) should be connected to the positive (+) terminal, and the lower potential wire (-48v) to the negative (-) terminal. A third, chassis ground wire should also be connected to the center terminal (⏚) and connected to an earth ground.

The PS-1000 DC power supply has six LEDs on its front panel. The behavior of these LEDs is described in Table 1.11.

Table 1.11 - *TNX*-1100 PS-1000 DC Power Supply LED Descriptions

LED	Color	Indicates	Troubleshooting Tips
Power OK	Green	No faults, voltage and current are OK.	N / A
	Off	No input voltage, the unit is off, or a fault exists.	
+5V Fault	Red	The power supply (+5V) has faulted.	If no other red LEDs are illuminated, the power supply needs to be replaced.
	Off	No +5V fault detected in the power supply.	
Input Fault	Red	The power being supplied to the module is less than 38 volts or greater than 70 volts.	The DC source is outside of the acceptable input range. Disconnect the *TNX*-1100 power supply from the feed and troubleshoot the source.
	Off	Input levels are normal.	
Output Fault	Red	The power supply's output voltage is less than 38 volts or greater than 70 volts.	
	Off	Output levels are normal.	
Overcurrent	Red	The input current is above the operating limit.	The DC source is outside of the acceptable input range. Disconnect the *TNX*-1100 power supply from the feed and troubleshoot the source.
	Off	Input current is normal.	
Reverse Polarity	Red	The (+) and (-) feed wires are connected to the wrong (opposite) terminals on the power supply.	Remove power from the feed wires and switch feed wire terminations.
	Off	Feed wire connections are OK.	

NOTE

If any of the LEDs on the power supply turn red, the power supply module and power source should be examined. Refer to Table 1.11 for initial troubleshooting information.

It is possible that the voltage being supplied to the module is insufficient, but if the power supply itself is found to be defective, please refer to Chapter 3 for information about hot-swapping a failed supply.

1.2.6 *TNX*-1100 Fan Tray

The *TNX*-1100 comes with a removable fan tray containing four fans that are used to cool the switch enclosure. The speed of each fan is monitored by circuitry in the CEC, and is available via SNMP. In this manner, the failure of any fan can be detected immediately. The fan tray is hot-swappable, and the entire tray may be replaced in the event of single or multiple fan failure. For hot-swap information, refer to Chapter 3, ”Hardware Maintenance Procedures.”

NOTE

The fans in the *TNX*-210 are not removable.

1.2.7 *TNX*-1100 Temperature Sensing

In the *TNX*-1100, a built-in thermal temperature sensor resides on each switch board and reads out the board’s local temperature. By default, the switch control software will trigger an alarm at 65°C and will reset the alarm when the temperature drops back down to 60°C or lower. However, the user can configure the alarm and reset thresholds in the software on an individual board via AMI. Please see the *ATM Management Interface (AMI) Manual* for more information about configuring these thresholds. If the temperature of an individual switch board were to reach 75°C, the switch board would shut itself down immediately.

CAUTION

This overtemperature condition is detectable by software, and will trigger an alarm condition which is visible through *ForeView* or *Element Manager*. Upon detection of an overtemperature condition, the *TNX*-1100 should be turned off to avoid damage to internal components.

1.2.8 *TNX*-1100 Common Equipment Card (CEC)

The CEC provided with the *TNX*-1100 performs several functions. Because each SCP contains an Ethernet port, a major function of the CEC is to provide a single, unified Ethernet port connection for all of the SCPs. The CEC is also responsible for monitoring the environmental conditions of the switch and reporting this information to the SCPs. The CEC reports conditions such as malfunctioning fans, overheated power supplies, and an overheated enclosure.

1.2.8.1 CEC Front Panel

The front panel of the *TNX*-1100 CEC includes the following features: alarm relay contacts, CEC status LEDs, and an Ethernet port with four LEDS. These features are illustrated in Figure 1.12. Refer to the following subsections for detailed descriptions of these features.

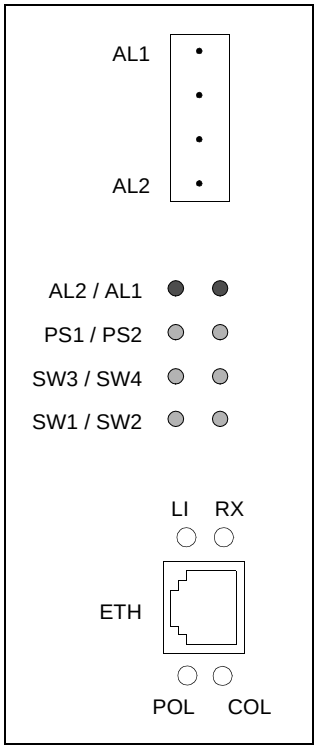

Figure 1.12 - CEC Front Panel Status Indicators

1.2.8.2 Alarm Relay Contacts

Pins 1 and 2 are the contacts for AL1, and pins 3 and 4 are the contacts for AL2, as shown in Figure 1.13. Although the pins are not actually labeled on a *TNX*-1100 CEC, they will be referred to sequentially from top to bottom (i.e., pin 1 is the top pin when the CEC is installed in the switch, and pin 4 is the bottom pin).

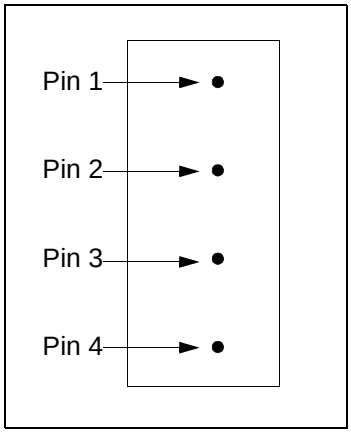

Figure 1.13 - Alarm Relay Contacts for AL1 and AL2

The alarm relay contacts are normally closed when there is no power to the switch. The user can attach alarm circuits to these contacts to trigger an external alarm in the case of an alarm condition on the switch.

The user can define AL1 and AL2 as major and minor alarm indicators and can display which condition is alarming through the use of AMI. For more information, please see Part 1 of the *AMI Configuration Commands Reference Manual*.

Table 1.12 - Alarm Relay Contact Status During Major and Minor Alarms

Condition	Pins 1 and 2	Pins 3 and 4
Switch Powered OFF	Jumped	Jumped
During Boot	Indeterminate	Indeterminate
Normal Operation	Open	Open
Minor Alarm Only	Jumped	Open
Major Alarm Only	Open	Jumped
Major and Minor Alarms	Jumped	Jumped

NOTE

In Table 1.12, “Jumped” indicates that the circuit between the indicated pins has been closed (i.e., an external alarm would be triggered if connected to the pins).

1.2.8.3 CEC Status LEDs

This subsection discusses the meaning of the status LEDs on the CEC of the *TNX*-1100 switch. The LEDs have been designed to provide information pertaining to the state of the switch at a glance.

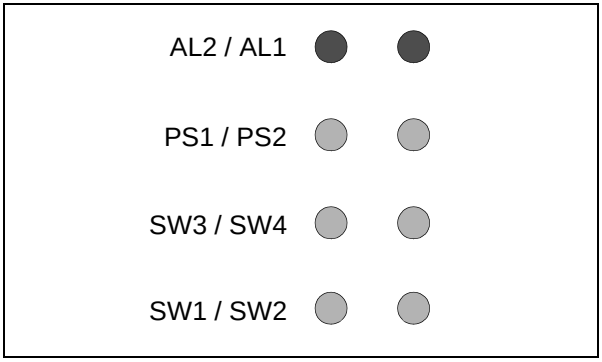

Figure 1.14 - CEC Status LEDs

There are eight status LEDs located on the front panel of the CEC in a 2 x 4 arrangement. The LEDs have been broken down into the following function groups: alarm LEDs, power supply LEDs, and switch board LEDs.

NOTE On the CEC, the status LEDs are labelled the same from top to bottom as discussed here (see Figure 1.14).

1.2.8.3.1 Alarm LEDs

The LEDs labeled AL1 and AL2 are alarm relay LEDs. During boot-up, AL1 and AL2 are in an indeterminate state. During normal operation, they will be off. During a state of alarm, they will illuminate red. By default, AL1 is the major alarm indicator for fan failure, an overtemperature condition, or a power supply failure. By default, AL2 is the minor alarm indicator for SPANS failure and for link failure. The user may display and/or change these configurations through the use of AMI. For more information, please see Part 1 of the *AMI Configuration Commands Reference Manual*.

1.2.8.3.2 Power Supply LEDs

There are two power supply LEDs on the front panel of the CEC, one for each power supply. The LEDs for the two power supplies should be illuminated yellow, indicating that the CEC is on and that the power supply corresponding to that LED is functioning correctly. The LED for a failed power supply will be extinguished. On a *TNX*-1100, power supply “1” is in the slot labeled PS1 on the enclosure, while power supply “2” is in the slot labeled PS2 on the enclosure.

1.2.8.3.3 Switch Board LEDs

There are four switch board LEDs on the front panel of the CEC, one for each possible switch board. These LEDs should be blinking, indicating that the switch has booted and is operating correctly. If the SCP is removed, the LEDs may remain in a steady-on or steady-off state. If the switch board in the slot corresponding to the LED is not intended for a *TNX*-1100 (e.g., it is a *TNX*-210*TNX*-210 board), or if the entire switch board corresponding to that LED is removed, then that LED will be extinguished. On a *TNX*-1100, the SW1 LED corresponds to switch board “1,” which is in the slot labeled 1 on the enclosure, and so on.

1.2.8.4 Ethernet Port

The Ethernet port located on the CEC of the *TNX*-1100 has a standard RJ-45 female connector and is designed to provide a single, unified Ethernet connection. It is connected via the backplane and simple Ethernet repeater to each SCP’s Ethernet port, thus eliminating the need to attach each SCP individually. This Ethernet port has four LEDs which indicate its current status as shown in Figure 1.15. These LEDs are described in Table 1.13 through Table 1.16.

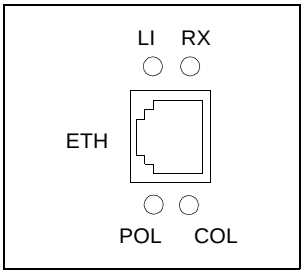

Figure 1.15 - CEC Ethernet Port and LEDs

Table 1.13 - CEC Receive (RX) LED Description

LED Color	Meaning
green	The Ethernet port is receiving traffic normally.
off	The Ethernet port is NOT receiving traffic.

Table 1.14 - CEC Link Integrity (LI) LED Description

LED Color	Meaning
green	The status of the twisted pair cable connected to the CEC Ethernet port is OK.
off	The Ethernet port is NOT receiving link integrity pulses. Check the integrity of the connection.

Table 1.15 - CEC Collision (COL) LED Description

LED Color	Meaning
red	An Ethernet collision has been detected on the CEC Ethernet port.
off	No Ethernet collisions have been detected.

Table 1.16 - CEC Polarity (POL) LED Description

LED Color	Meaning
amber	A reverse polarity condition has been detected on the twisted pair cable connected to the CEC Ethernet port. The polarity is automatically corrected, but the amber light will remain illuminated until a corrected twisted pair cable is inserted into the Ethernet port.
off	The polarity of the twisted pair cable connected to the CEC Ethernet port is OK.

1.2.9 CEC-Plus

The CEC-Plus is an intelligent environmental/timing management subsystem for the *TNX*-1100 ATM Switch. Some of the features of the CEC-Plus include:

- Hot-swappability
- Redundant environmental monitoring
- Redundant timing input sources
- Support for Stratum 3 or 4 timing synchronization (derived from an external DS1 or E1 source, RJ-45 input and output)
- Isolated internal switch management traffic (from external Ethernets)

The installed CEC-Plus configuration consists of a frame (card carrier and passive backplane interface) and redundant Environmental Control Processor (ECP)/External Synchronization Input (ESI) pairs. The ECP/ESI pair comprises the Timing Control Module (TCM). This configuration provides redundant environmental and system management, as well as high-end distributed timing capabilities (DS1 or E1 interfaces). (See Figure 1.16).

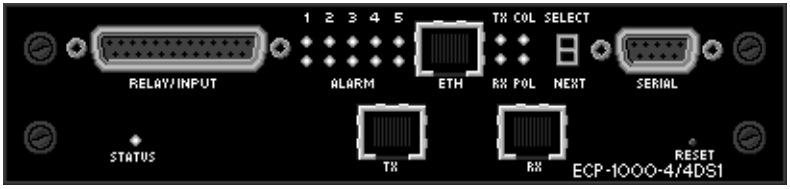

Figure 1.16 - CEC-Plus Timing Control Module (TCM)

NOTE

Since the CEC-Plus communicates with the switch board SCPs via the backplane, the individual SCP Ethernet connections should NOT BE USED when the CEC-Plus is installed.

1.2.9.1 CEC-Plus Features

The CEC-Plus includes the following hardware features:

- 25 MHz Intel i960 CA processor
- 8 MB DRAM
- 256 KB boot PROM
- 2 MB Flash memory
- 114 bytes of non-volatile SRAM
- Self-powered, real-time clock
- Two programmable interval timers
- Dual Ethernet controllers (10Base-T on front panel, 10Base-2 to backplane)

1.2.9.2 CEC-Plus Failover

The CEC-Plus provides redundant environmental and timing management when two TCMs are installed.

When the CEC-Plus is powered on, each TCM tries to assert itself as master. Whichever TCM starts up first is the master, and the other TCM acts as the standby. During operation, the master TCM periodically transmits a “heartbeat” to the standby TCM. This heartbeat tells the second TCM to remain in standby mode.

In the event of a failure on the master TCM (e.g., power loss, oscillator failure, etc.), the master TCM will reset.

NOTE A panic on the master TCM forces it to reset. An ESI failure forces it into standby mode.

Upon reset, the heartbeat stops, informing the standby TCM that it must assume control and become master. The new master TCM remains as such until a similar failure or an external reset.

1.2.9.3 Configuration

The CEC-Plus can be configured in many ways (e.g., TCM name, enabling and disabling alarms, etc.) through the Extended Management Interface (EMI). For more information about EMI, see the *CEC-Plus Installation and User’s Manual.*

1.2.9.4 CEC-Plus Hardware

The CEC-Plus subsystem resides in the far left slot of a *TNX*-1100 ATM Switch (the slot to the left of switch board #1). Dual TCM assemblies are available, providing fully redundant environmental and timing management features.

1.2.9.4.1 Card Carrier Hardware

The base of the CEC-Plus assembly is the card carrier (see Figure 1.17), which divides the CEC slot into two and secures the TCM in the switch. Each of the two halves of the slot can accept a TCM assembly.

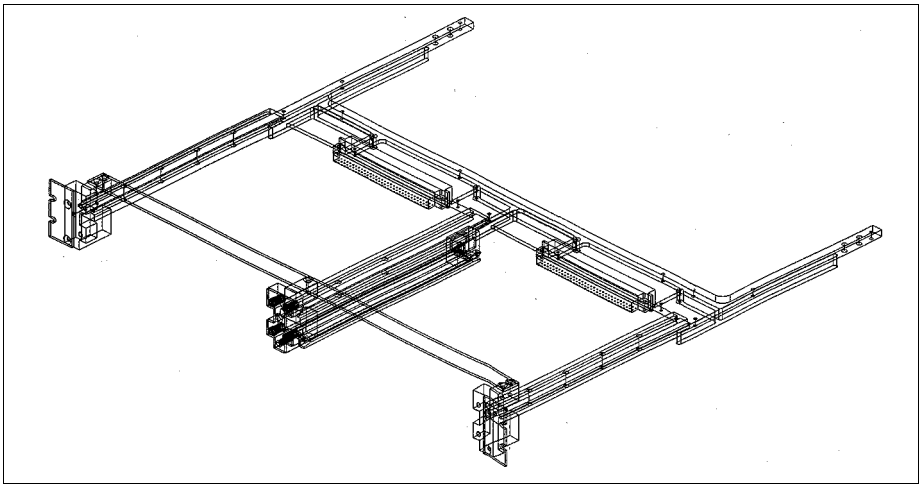

Figure 1.17 - CEC-Plus Card Carrier

1.2.9.4.2 TCM Hardware

The standard CEC-Plus configuration is a card carrier and dual TCMs. The front-panel features of the TCM are detailed in the following subsections (also, see Figure 1.18).

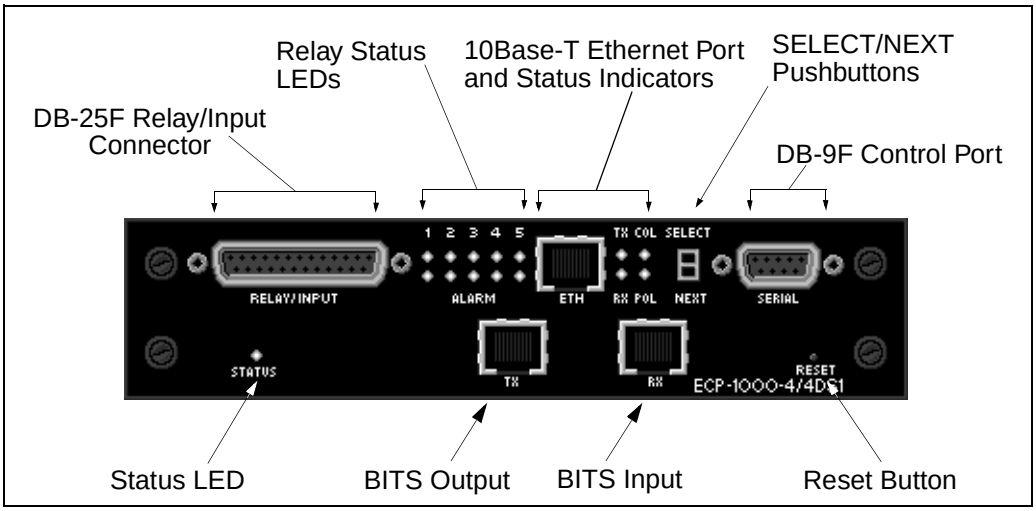

Figure 1.18 - TCM Hardware Features

1.2.9.4.2.1 DB-25F Relay/Input Connector

The DB-25F relay/input connector provides five alarm relay contacts and five digital input connections. Each alarm is associated with three pin contacts, and each digital input is associated with two pin contacts.

The alarm relay contacts can be used to connect an external alarm (e.g., a warning light or horn) to the switch. In this way, notification of an alarm condition is not limited to AMI, EMI, or front panel LEDs. By default, all five alarms are active (contacts closed) when NOT receiving power (see Figure 1.19 and Table 1.16 for more information).

The digital inputs can be used to monitor activity around the switch or the closet in which the switch resides (e.g., a “door open” event).

NOTE

The digital inputs are not currently usable as they are not supported by the TCM software.

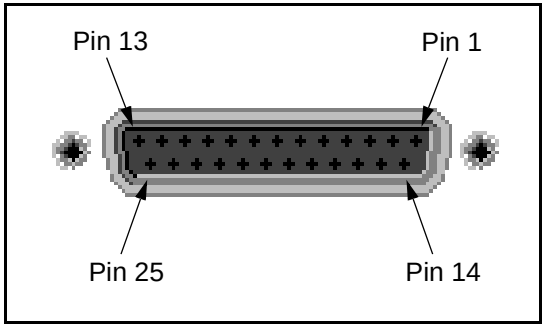

Figure 1.19 - DB-25F Pin Locations

Table 1.17 - DB-25F Pinouts

Pin	Usage	Pin	Usage
1	COM1	14	NO4
2	COM2	15	NO5
3	COM3	16	EI1
4	COM4	17	EI2
5	COM5	18	EI3
6	NC1	19	EI4
7	NC2	20	EI5
8	NC3	21	EIGND
9	NC4	22	EIGND
10	NC5	23	EIGND
11	NO1	24	EIGND
12	NO2	25	EIGND
13	NO3		
* COM = Relay commutator; NC = Normally closed contact; NO = Normally open contact; EI = Digital input; EIGND = Return path			

1.2.9.4.2.2 Relay Status LEDs

The relay status LEDs indicate the presence of alarm conditions on the switch. There are two LEDs (one green and one amber) for each alarm, and each LED is associated to a set of three alarm relay contacts on the DB-25F relay/input connector (for connecting external alarms). The green LED is illuminated when no alarms are present, the amber LED is illuminated during an alarm condition.

By default, LED set #1 is the major alarm indicator for fan failure, an overtemperature condition, or a power supply failure. LED set #2 is the minor alarm indicator for SPANS failure and for link failure. Sets #3 through #5 are undefined. These configurations can be changed through the use of the Extended Management Interface (EMI). For more information, please refer to the *CEC-Plus Installation and User's Manual.*

1.2.9.4.2.3 SELECT/NEXT Pushbuttons

Currently, the SELECT and NEXT pushbuttons are only used by the diagnostic software, which is not available to the end user.

1.2.9.4.2.4 DB-9F Control Port Connector

The DB-9F control port is an RS-232 serial port that provides terminal access for any VT100 (or similar) terminal or terminal emulation package to the CEC-Plus. The TCM's control port supports tty connections to allow remote access and management via a modem. For more information about configuring the control port, see the *CEC-Plus Installation and User's Manual.*

The control port's standard DB-9 female connector has pin locations as shown in Figure 1.20.

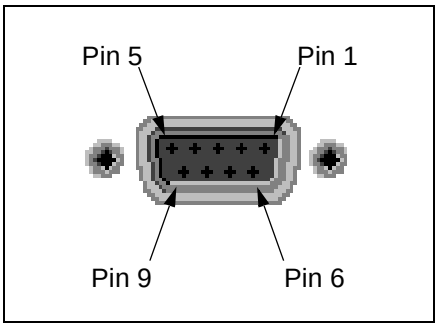

Figure 1.20 - DB-9F Control Port Pin Locations

Table 1.18 describes the DB-9F control port pinouts that are illustrated in Figure 1.20.

Table 1.18 - DB-9F Control Port Pinouts

Pin Number	Signal Mnemonic	Signal Name
1	DCD	Data Carrier Detect
2	RXD	Receive Data
3	TXD	Transmit Data
4	DTR	Data Terminal Ready
5	GND	Signal Ground
6	DSR	Data Set Ready
7	RTS	Request to Send
8	CTS	Clear to Send
9		Not Used

1.2.9.4.2.5 Status LED

The status LED that is located in the lower-left corner of the TCM front panel reflects the current state of power to the TCM. Table 1.19 lists the states of the status LED and their meanings.

Table 1.19 - Status LED Description

LED Color	Meaning
red	The TCM has power, but has failed. (The CEC-Plus, not the entire switch, has failed self-diagnostics or has experienced an operational failure.)
green (solid)	The TCM has power and is working properly as master.
green (flashing)	The TCM has power and is working properly as standby.
amber (solid)	When in automatic or BITS mode, one of the two input clock sources is invalid, but not both.
amber (flashing)	The TCM has no valid input clock sources.
off	The TCM has not booted.

NOTE

The standby TCM's status LED always flashes green (when the TCM is functional). Solid green, solid amber, and flashing amber are active TCM status indicators.

1.2.9.4.2.6 10Base-T Ethernet Port

The 10Base-T Ethernet port located on the TCM has a standard RJ-45 female connector and is designed to provide a single, unified Ethernet connection to the *TNX*-1100. IP traffic is bridged to the *TNX*-1100 internal Ethernet segment, eliminating the need to attach each SCP individually. This Ethernet port has four LEDs which indicate its current status as shown in Figure 1.21. These LEDs are described in Table 1.20 through Table 1.23.

NOTE

When configured with a CEC-Plus, a switch's individual SCP Ethernet ports cannot be used. Usage of an SCP's Ethernet port will disable timing operation for that SCP.

For more information about configuring the TCM's Ethernet interface, see the *CEC-Plus Installation and User's Manual.*

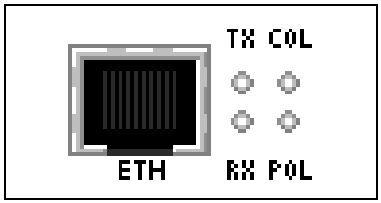

Figure 1.21 - TCM Ethernet Port and LEDs

Table 1.20 - TCM Transmit (TX) LED Description

LED Color	Meaning
green (solid)	The status of the twisted pair cable connected to the TCM Ethernet port is OK.
green (flashing)	The TCM is transmitting traffic.
off	The Ethernet port is NOT receiving link integrity pulses. Check the integrity of the connection.

Table 1.21 - TCM Receive (RX) LED Description

LED Color	Meaning
green	The Ethernet port is receiving traffic normally.
off	The Ethernet port is NOT receiving traffic.

Table 1.22 - TCM Collision (COL) LED Description

LED Color	Meaning
amber	An Ethernet collision has been detected on the TCM Ethernet port.
off	No Ethernet collisions have been detected.

Table 1.23 - TCM Polarity (POL) LED Description

LED Color	Meaning
amber	A reverse polarity condition has been detected on the twisted pair cable connected to the TCM Ethernet port. The polarity is automatically corrected, but the amber light will remain illuminated until a corrected twisted pair cable is inserted into the Ethernet port.
off	The polarity of the twisted pair cable connected to the TCM Ethernet port is OK.

1.2.9.4.2.7 Reset Button

The reset button lets the user reset the TCM. Pressing the reset button “soft boots” the TCM and runs the initial power-on diagnostics. All open EMI sessions are ended by the TCM. Because it is small (to avoid accidental resets), it is recommended that you use a straightened paper clip to push the reset button.

1.2.9.4.2.8 BITS Clock Input and Output Ports

The TCM derives timing from an external Building Integrated Timing Source (BITS) clock. The TCM is available in DS1 (1544 Kbps) or E1 (2048 Kbps).

When configured for BITS timing, the timing source derived by the TCM is a BITS clock which is fed via the RJ-48C Receive (Rx) port. The same signal can then be passed to another TCM from the RJ-48C Transmit (Tx) port (see Figure 1.22). For more information about configuring timing, see the *CEC-Plus Installation and User’s Manual*.

Figure 1.22 - BITS Clock Input and Output Ports

NOTE

The Tx port sends out the currently selected timing source unless the TCM is in freerun or holdover (in which case, the output of the TCM's DPLL is used).

NOTE

The BITS Tx port from one TCM must never be connected to the BITS Rx port of a second (redundant) TCM in the same chassis. This results in a timing loop, producing undesirable behavior.

The pinouts for the RJ-48C Receive (Rx) port are listed in Table 1.24. Shield lines are provided in case shielded cable is used.

Table 1.24 - RJ-48C Tx Port Pinouts

Pin Number	Signal Mnemonic	Signal Name
1		Not Used
2		Not Used
3		Not Used
4	TX+	Transmit Data +
5	TX-	Transmit Data -
6		Not Used
7		Not Used
8		Not Used

The pinouts for the RJ-48C Transmit (Tx) port are listed in Table 1.25. Shield lines are provided in case shielded cable is used.

Table 1.25 - RJ-48C Rx Port Pinouts

Pin Number	Signal Mnemonic	Signal Name
1	RX+	Receive Data +
2	RX-	Receive Data -
3		Not Used
4		Not Used
5		Not Used
6		Not Used
7		Not Used
8		Not Used

CHAPTER 2 Switch Setup

This chapter contains information about setting up a *TNX*-210 or *TNX*-1100 ATM switch. The following sections are outlined in this chapter:

- **Section 2.1 -** Introduction
- **Section 2.2 -** Checking and Unpacking the Switch Package
- **Section 2.3 -** Electrical Considerations
- **Section 2.4 -** Installing a TNX-210
- **Section 2.5 -** Installing a TNX-1100
- **Section 2.6 -** Modem Configuration
- **Section 2.7 -** Configuring IP Addresses
- **Section 2.8 -** Subsequent Operation
- **Section 2.9 -** Post-installation Procedures

2.1 Introduction

Before installing a *TNX* ATM switch, there are several important factors that must be taken into consideration, depending on the type of installation site. The following sections discuss in detail how to install a *TNX* ATM switch and any prerequisites to the installation.

NOTE

It is important to read through the ENTIRE installation procedure before attempting to turn on the power to the unit.

2.2 Checking and Unpacking the Switch Package

Upon receipt of, and before opening your *TNX* ATM switch, inspect the package for any damage that may have occurred during shipping. If the package shows any signs of external damage or rough handling, notify your carrier's representative.

When unpacking your *TNX* ATM switch, be sure to keep all original packing materials. They may be needed for storing, transporting, or returning the product.

CAUTION

All products returned to FORE Systems, under warranty, must be packed in their original packing materials.

An inventory of the switch package should be performed before supplying power to the unit. Check the contents of the switch package against your packing slip and verify that all listed equipment has been received.

If any of the items are missing or damaged, please contact FORE Systems' Technical Assistance Center immediately using one of the methods described in the Preface of this manual.

2.3 Electrical Considerations

The following items should be considered when setting up the switch:

CAUTION

Consideration should be given to the connection of the equipment to the supply circuit and the effect that the overloading of circuits could have on overcurrent protection and supply wiring. Appropriate consideration of equipment nameplate ratings should be used when addressing this concern.

CAUTION

Reliable grounding of rack-mounted equipment should be maintained. Particular attention should be given to supply connections other than direct connections to the branch (i.e., use of power strips).

2.4 Installing a *TNX*-210

The *TNX*-210 is designed to be installed as a stand-alone unit placed on the desktop, or as a rack-mounted unit. Note the following precautions during the installation:

CAUTION

FORE Systems recommends that the maximum operating temperature not exceed 40°C. Consideration must be made if the switch is to be installed in a closed or multi-unit rack assembly, because the ambient temperature of the rack environment may be greater than the room ambient temperature.

Take care not to block the air vents of the switch, as this would compromise the amount of air flow required for proper cooling.

NOTE

Before you install the switch and plug it in, FORE Systems strongly recommends that you let the unit adjust to room temperature after unpacking the unit from its shipping container.

If the switch is to be installed on a desktop, simply choose a location for it and move on to Section 2.4.2 in this manual.

2.4.1 Rack-mounting a *TNX*-210

Rack-mount brackets must be attached to the *TNX*-210 before it can be installed in a rack.

WARNING!

When rack-mounting equipment, make sure that a hazardous condition is not created due to uneven weight distribution.

To prevent user injury and possible damage to equipment, FORE Systems recommends that at least two people be present when rack-mounting a switch.

2.4.1.1 Required Tools

Rack-mounting equipment, a cable relief strain rail, and 6 Phillips-head screws are supplied with each switch for rack-mounting the unit. You will need to supply a Phillips screwdriver.

2.4.1.2 Installing the Rack-mount Brackets

To install the rack-mount brackets and cable relief strain rail, use the following procedure:

1. Carefully place the switch unit upside down on a clean, flat, sturdy work surface with the front of the unit still facing front.
2. Using a Phillips screwdriver, remove the four feet from the bottom of the unit.
3. Each rack-mount bracket has three screws that secure the bracket to the bottom of the unit. The holes that run along the bottom of the switch are used to secure the bracket to the bottom of the unit. Tighten the three screws to secure the left bracket, marked HWST0027-0001, to the left side of the unit. Tighten the three screws to secure the right bracket, marked HWST0027-0002, to the right side of the unit.

CAUTION

When attaching the rack-mount brackets, the use of screws other than those provided could result in damage to the unit.

2.4.1.3 Placing the Switch in a Rack

1. Once the brackets are secure, choose a rack position for the switch. The switch should be placed right side up in the rack with the front of the unit facing forward.

CAUTION

When mounted in an equipment rack, do not use the *TNX*-210 chassis to support other equipment. This could overload the mounting brackets and cause damage to the unit.

Once the switch is mounted in the rack, you can attach the cable strain relief rail if you wish.

2. Line up the holes in the rail with a set of holes directly above or below the switch rack-mount brackets, then secure the rail using the enclosed screws.

2.4.2 Connecting a Terminal

Before turning on the *TNX*-210, a terminal should be connected for monitoring power-up behavior and performing initial configurations (e.g., IP and Ethernet interfaces). These configurations are necessary on each installed SCP.

Connect the serial cable (supplied with the switch) from the serial port of the *TNX*-210's SCP to any tty-type device (such as a terminal, or the serial port of a workstation or PC running a terminal emulation program).

NOTE

The *TNX*-210's serial port comes configured at 9600 baud, 8 bits, no parity, and 1 stop bit.

2.4.3 Connecting the *TNX*-210 to a Power Source

After mounting the switch, it must be connected to an AC or DC power source.

2.4.3.1 Connecting to AC Power

For an AC-powered *TNX*-210, use the following steps when connecting the unit to a power source:

1. Ensure that the power switch on both power supplies is in the OFF position.
2. Connect the female end of one of the supplied power cords to the AC power input connector on each power supply (on the back of the switch).
3. Plug the male end of each power cord into an approved electrical outlet (110 volt).

2.4.3.2 Connecting to DC Power

NOTE

The DC-powered *TNX*-210 is designed to be connected to a -48V DC power source.

For a DC-powered *TNX*-210, the steps below should be followed when connecting the unit to a power source:)

1. Ensure that the power switch on both power supplies is in the OFF position.
2. Remove the protective cover from the terminal strips on the back of the switch.
3. If using an intermediate or power conditioning device (e.g., a breaker interface panel), ensure that power is removed from all outgoing power connections.
4. Connect the feed wires to the terminal strips on the rear of the unit.

NOTE

Ensure that #16 AWG or larger wire is used for the DC feed wires. The screw terminals are #6 screws. The 48-volt feed wires should be attached to the terminal strips using wire terminals designed to fit #6 studs. FORE Systems recommends the use of either ring terminals or locking forked tongue terminals.

CAUTION

Be sure to observe polarity in the following step.

5. The higher potential wire (power) should be connected to the positive (+) terminal, and the lower potential wire (battery return) to the negative (–) terminal. A third, chassis ground wire should be secured to the center terminal (⏚) and connected to an earth ground.
6. Once the feed wires have been connected, replace the protective cover on the terminal block.
7. Return DC power to the feed wires coming into the supply.

2.4.4 Turning on the *TNX*-210

After being placed on the desktop or securely rack-mounted, attached to a terminal, and properly connected to a reliable and safe power source, the *TNX*-210 is ready to be turned on. To turn on an AC-powered *TNX*-210, flip the power switch on both power supplies to the ON position. To turn on a DC-powered *TNX*-210, flip the circuit breaker on both power supplies to the ON (up) position.

After turning on the switch you should see it boot on the attached tty device.

NOTE

The *TNX*-210 is ready for user configuration as soon as it boots. To access the *TNX*-210, enter `ami` at the prompt of the tty device.

The *TNX*-210 is operational at this point if used with other FORE equipment (i.e., switches or interface cards). However, if other vendor equipment is connected, you may have to complete an initial user configuration.

NOTE

If you wish to have remote access to the *TNX*-210, you must first connect and configure a modem. Please refer to Section 2.6 in this manual for more information.

2.5 Installing a *TNX*-1100

The *TNX*-1100 is designed to be rack-mounted. After mounting the unit, a terminal should be attached and connections to the power source should be made. Note the following precautions during the installation:

WARNING!

When rack-mounting equipment, make sure that a hazardous condition is not created due to uneven weight distribution.

CAUTION

FORE Systems recommends that the maximum operating temperature not exceed 40°C. Consideration must be made if the *TNX*-1100 is to be installed in a closed or multi-unit rack assembly, because the ambient temperature of the rack environment may be greater than the room ambient temperature.

CAUTION

Take care not to block the air vents of the *TNX*-1100, as this would compromise the amount of air flow required for proper cooling.

CAUTION

Ensure that any unpopulated switch board slots are covered with a blank panel before turning on your *TNX*-1100. Operating the *TNX*-1100 with any of these slots left open can cause a significant temperature rise in a very short time.

2.5.1 Rack-mounting the *TNX*-1100

To install the *TNX*-1100 in the equipment rack, perform the following steps:

1. Choose a rack position for the switch.

WARNING!

Because of the unit's weight, two people should lift the unit to place it in the equipment rack.

2. Place the switch in the rack with the front of the unit facing forward.

CAUTION

When it is mounted in the equipment rack, do not use the chassis to support other equipment. This could overload the mounting brackets and cause damage to the unit.

3. After mounting the enclosure, verify that the enclosure is screwed tightly to the rack to ensure that proper grounding is maintained. Additionally, the rack should be connected to an earth ground.

2.5.2 Connecting a Terminal

Before turning on the switch, a terminal should be connected for monitoring power-up behavior and performing initial configurations (e.g., IP and Ethernet interfaces). These configurations are necessary on each installed SCP.

Connect the null-modem serial cable (supplied with the *TNX*-1100) from the serial port of the *TNX*-1100's control processor to any tty-type device (such as a terminal, or the serial port of a workstation or PC running a terminal emulation program).

NOTE

The *TNX*-1100's serial port comes configured at 9600 baud, 8 bits, no parity, and 1 stop bit.

2.5.3 Connecting the *TNX*-1100 to a Power Source

After mounting the switch, it must be connected to a power source (AC or DC).

2.5.3.1 Connecting to AC Power

For an AC-powered switch, the steps below should be followed when connecting the unit to a power source:

1. Ensure that the power switch on both power supplies is in the OFF position.
2. Connect the female end of one of the supplied power cords to the AC power input connector on each power supply.
3. Plug the male end of each power cord into an approved electrical outlet (110 volt).

2.5.3.2 Connecting to DC Power

NOTE

The DC powered *TNX*-1100 is designed to be connected to a -48V DC power source.

For a DC-powered switch, the steps below should be followed when connecting the unit to a power source:

1. Ensure that the circuit breaker on both power supplies is in the OFF (down) position.
2. Remove the protective cover from the power connectors on the front of each power supply.
3. If using an intermediate or power conditioning device (e.g., a breaker interface panel), ensure that power is removed from all outgoing power connections.
4. If you are using the three-pin D-subminiature connector, connect one end of the wiring assembly to the power source and insert the other end into the male connector on the power supply. If you are not using the three-pin D-subminiature connector, skip to step 7.
5. Secure the three-pin plug with the screws on the top and bottom of the connector.
6. Repeat steps 4 and 5 for each power supply.
7. If you are using the three-wire terminal block, connect the feed wires to the DC source and secure the feed wires to the terminal strip on the front of the power supply. If you are not using the three-wire terminal block, skip to step 10.

NOTE

Ensure that the DC feed wires are #6-#10 AWG. The screw terminals are #10 screws. The 48-volt feed wires should be attached to the terminal strips using wire terminals designed to fit #10 studs. FORE Systems recommends the use of either ring terminals or locking forked tongue terminals.

CAUTION

Be sure to observe polarity in the following step.

8. The higher potential wire (Grnd) should be connected to the positive (+) terminal, and the lower potential wire (-48v) to the negative (-) terminal. A third, chassis ground wire should also be connected to the center terminal (⏚) and connected to an earth ground.
9. Repeat steps 7 and 8 for each power supply.
10. Once the feed wires have been connected, replace the protective cover on the terminal block.
11. Return DC power to the feed wires coming into the supply.

2.5.4 Turning on the *TNX*-1100

After being securely rack-mounted, attached to a terminal, and properly connected to a reliable and safe power source, the switch is ready to be turned on. To turn on an AC-powered switch, flip the power switch on both power supplies to the ON position. To turn on a DC-powered switch, flip the circuit breaker on both power supplies to the ON (up) position.

After turning on the switch, you should see it boot on the attached tty device.

NOTE

The switch is ready for user configuration as soon as it boots. To access the switch, enter `ami` at the prompt of the tty device.

NOTE

The switch is operational at this point if used with other FORE equipment (i.e., switches or interface cards). However, if other vendor equipment is connected, you may have to complete an initial user configuration. To do this, please refer to Section 2.7 or use the **`startup`** command in AMI. For more information about the **`startup`** command, please see Chapter 1 in the *ATM Management Interface (AMI) Manual*.

NOTE

If you wish to have remote access to the switch, you must first connect and configure a modem. Please refer to Section 2.6 in this manual for more information.

2.6 Modem Configuration

All *TNX* ATM switches support modem access. This may be useful if a switch is installed in a remote location where direct, physical access to the switch is not possible or practical. Keep the following in mind when using a modem to access a *TNX* ATM switch:

- To allow a *TNX* ATM switch with an i960-based SCP to communicate with the modem, a Null-Modem Adapter must be installed on the factory-supplied serial cable.
- To allow a *TNX* ATM switch with a Pentium-based SCP to communicate with the modem, a female to modem-end connector must be installed on the factory-supplied null-modem serial cable.
- A *TNX* ATM switch will not disconnect an ATM Management Interface (AMI) session on loss-of-carrier; therefore, you must ensure that you have completely exited from an open AMI session before disconnecting the modem session.

To allow a modem to work with a *TNX* ATM switch, the modem parameters must be configured correctly.

NOTE

The *TNX*-210 and *TNX*-1100 only support a modem speed of 9600 baud.

2.6.1 Modem Parameters

You should use a Hayes-compatible modem, as the configuration parameters supplied here are applicable to this type of modem. The following parameters should be applied to your Hayes-compatible modem to allow it to function properly with the switch's serial port. You may attach a tty device to the modem to set these parameters.

The parameters are defined as follows:

Setting	Comment
ATE0	Turn off Echoing
ATQ1	No Return Codes
AT&C0	Force Carrier Detect (CD) High
AT&D0	Ignore Data Terminal Ready (DTR)
AT&W	Save Modem Configuration

2.7 Configuring IP Addresses

NOTE

You can either follow the instructions in this section or you can use the **`startup`** command in AMI to configure your switch quickly. For more information about the **`startup`** command, please see Chapter 1 in the *ATM Management Interface (AMI) Manual*.

On a new switch, the `ie0`, asx`0`, `qaa0`, `qaa1`, `qaa2`, and `qaa3` interfaces are not configured. An IP address for at least one of the interfaces must be configured to allow IP access to the switch, which in turn, enables SNMP access. By setting the IP address of the FORE IP (asx`0`) or one of the Classical IP (`qaa`) interfaces, in-band (over ATM) access to the switch control processor (SCP) is enabled. By setting the IP address of the Ethernet IP (`ie0`) interface, out-of-band access to the SCP is enabled.

NOTE

On a *TNX*-1100, the IP address must be configured individually on each SCP.

NOTE

Although this section describes Ethernet IP, FORE IP, Classical IP, and LANE in that order, it does not matter in which order or in which combination you choose to configure your switch.

2.7.1 Overview of IP Addressing

If you wish to use SNMP functions, the minimum configuration for a *TNX* switch is to assign an IP address to its network interfaces. This allows you to communicate with the switch from any workstation connected to your ATM LAN. IP addresses must be assigned to the network interfaces in order to perform any SNMP functions.

2.7.1.1 Logical IP Subnets

An important concept in IP ATM networks is that of a Logical IP Subnet (LIS). An LIS is a group of hosts configured to be members of the same IP subnet (that is, they have the same IP network and subnetwork numbers). It is possible to maintain several overlaid LISes on the same physical ATM network. Therefore, placing a host on a specific subnet is a logical choice rather than a physical one.

The number of LISes, and the division of hosts into each LIS, is purely an administrative issue. Limitations of IP addressing, IP packet filtering, and administrative boundaries may guide a manager into establishing several LISes onto a single ATM network. Keep in mind that communication between LISes must occur through IP routing.

The IP subnet mask is a pattern of 32 bits that is combined with an IP address to determine which bits of an IP address denote the network number and which denote the host number on that particular network.

2.7.1.2 Network Classes

There are three classes of networks in the Internet, based on the number of hosts on a given network.

- Class A - These are large networks with addresses in the range 1-126 and with a maximum of 16,387,064 hosts.
- Class B - These are medium networks with addresses in the range 128-191 and with a maximum of 64,516 hosts.
- Class C - These are small networks with addresses in the range 192-254 with a maximum of 254 hosts.

Addresses are given as dotted decimal numbers in the following format:

nnn . nnn . nnn . nnn

In a Class A network, the first of the numbers is the network number, the last three numbers are the local host address. The default subnet mask is 255.0.0.0.

In a Class B network, the first two numbers are the network, the last two are the local host address. The default subnet mask is 255.255.0.0.

In a Class C network, the first three numbers are the network address, the last number is the local host address. The default subnet mask is 255.255.255.0.

2.7.2 Configuring Ethernet IP

To configure the Ethernet IP on a *TNX* switch, use the following AMI command on the switch:

configuration ip address *<interface> <address> <netmask> <up>*

To use Ethernet IP on the switch, you must use `ie0` as the *<interface>*. The *<address>* would be one that is appropriate for your network. The subnet *<mask>* must be entered in dotted decimal notation. For example, you would enter something similar to the following:

```
configuration ip address ie0 198.25.22.46 255.255.255.0 up
```

By default, the only interface on a switch which is `up`, or active, is the switch's local interface, `lo0`. This interface is always `up` to allow AMI to run on the switch. All of the other interfaces are `down`, or not active. You must change the state of the Ethernet IP interface to be `up`, or active.

At this point, Ethernet IP is running on the switch. To configure FORE IP, follow the examples shown in the next section.

2.7.3 Configuring FORE IP

To configure the FORE IP on a *TNX* switch, use the following AMI command on the switch:

configuration ip address *<interface> <address> <netmask> <up>*

To use FORE IP on the switch, you must use asx`0` as the *<interface>*. The *<address>* would be one that is appropriate for your network. The subnet *<mask>* must be entered in dotted decimal notation. For example, you would enter something similar to the following:

```
configuration ip address asx0 198.25.22.46 255.255.255.0 up
```

By default, the only interface on a switch which is `up`, or active, is the switch's local interface, `lo0`. This interface is always `up` to allow AMI to run on the switch. All of the other interfaces are `down`, or not active. You must change the state of the FORE IP interface to be `up`, or active.

At this point, FORE IP is running on the switch. To configure Classical IP, follow the examples shown in the next section.

2.7.4 Configuring Classical IP

To configure Classical IP on a *TNX* ATM switch, perform the following steps:

1. Configure the IP address of one of the Classical IP interfaces (qaa0, qaa1, qaa2, qaa3) by entering the following AMI command:

   configuration ip address <interface> <address>

   where <interface> must be one of the qaa interfaces. If you are configuring one Classical IP interface, you should use qaa0. <address> would be one that is appropriate to your network. For example, you would enter something similar to the following:

   configuration ip address qaa0 198.25.22.48

2. Change the state of the Classical IP interface by entering the following AMI command:

   configuration ip admin *<interface>* (**up**|**down**)

   where *<interface>* must be the qaa interface to which you assigned the address in step 1. For example, you would enter the following:

   configuration ip admin qaa0 up

NOTE For more information about Classical IP, see Chapter 2 in the *ATM Switch Network Configuration Manual*.

Be sure that the adapter interface to the switch has been configured. For information about configuring this interface, refer to the User's Manual that came with your particular adapter.

2.7.4.1 Configuring the ARP Server

If you wish to use a workstation or a switch other than this switch as the ARP server, then you must configure the ARP server for your switch. To configure the address of the ARP server, use the following AMI command:

`configuration atmarp arpserver set` *`<NSAPaddress>`* [*`<interface>`*]

Use the command **`configuration atmarp getnsap`** to display the NSAP address for this interface and cut and paste the *`<NSAP address>`* from the display.

Again, since you are configuring Classical IP, the *`<interface>`* must be one of the `qaa` interfaces. If you are using `qaa0`, you do not need to enter it since it is the default interface. If you are using a different `qaa` interface, you must enter a value for *`<interface>`*. For example, you would enter the following:

```
configuration atmarp arpserver set
47000580ffe1000000f12400de0020481900de00
```

At this point, Classical IP is running on the switch.

2.7.5 Configuring LAN Emulation

There are different instructions for configuring an ELAN, depending on how your network is currently configured. Please see the *ATM Switch Network Configuration Manual* for more information.

2.7.6 Configuring IP Routes

A static IP route can be added to the local IP routing table. To create an IP route, use the following AMI command on the switch:

configuration ip route new (**default** | *<destination-ipaddress>)*
*<gateway> [<metric>] [(**host** | **net**)]*

To create a default route, you must enter default. The *<destination-ipaddress>* would be the destination IP network number. The*<gateway>* would be the gateway address to the destination IP network number. The [<metric>] would be the number of hops to the destination IP network. If 1 is specified, the route is created with the RTF_GATEWAY flag set. The default is 1. The [(host)] means this is a host-specific route with the destination being a specific node's IP address. net means this is a network-specific route with the destination being a network IP address. The default is net. For example, you would enter something similar to the following:

configuration ip route new default 198.25.22.46 198.25.22.21

Use the following AMI command to display the current IP routes configured:

configuration ip route show

The following displays:

```
Destination      Gateway          Metric      Interface     Flags
default          169.144.48.1     1           le0           G
169.144.48.0     169.144.48.21    0           le0
169.144.60.0     169.144.60.21    0           asx0
169.144.64.0     169.144.64.21    0           qaa0
169.144.200.0    169.144.200.21   0           el0
169.144.204.0    169.144.204.21   0           el1
169.144.205.0    169.144.205.21   0           el2
169.144.206.0    169.144.206.21   0           el3
```

NOTE

See Part 1 of the *AMI Configuration Commands Reference Manual* for more information on the IP configuration commands.

2.8 Subsequent Operation

After its initial configuration is complete, a *TNX* switch *DOES NOT* require a terminal for normal operation.

NOTE

FORE Systems strongly recommends that you disconnect the serial cable once you have configured the switch and then access the switch over the ATM network or over Ethernet.

All further communication with your *TNX* switch can be performed over the ATM network or over Ethernet. For example, you can access AMI using telnet.

WARNING!

Once installed, before any service is performed on the unit, the power should be turned off and the power cord disconnected, except when following the hot-swap instructions in this manual.

2.9 Post-installation Procedures

After finishing the installation of your *TNX* ATM switch, consider the operations listed in this section.

2.9.1 Verifying the Installation

To verify that your switch is up and running, log in to AMI and open a session on the switch. Enter the following parameters at the prompt to show the configuration of all of the ports on an individual switch fabric:

`configuration port show`

2.9.2 AMI Security

The administrative password on your *TNX* ATM switch may be changed to provide password-protected access to AMI. FORE Systems recommends that you do this to prevent unauthorized users from accessing your *TNX* ATM switch. This option is available in AMI using the **`conf security login password`** [*<userid>*] command.

For complete information about how to assign or change the password and how to configure userids, please see Part 2 of the *AMI Configuration Commands Reference Manual*.

CHAPTER 3 Hardware Maintenance Procedures

This chapter discusses various hot-swapping procedures for the *TNX*-210 and *TNX*-1100 ATM switches. Items discussed include the following:

- **Section 3.1 -** Network Module Replacement
- **Section 3.2 -** Power Supply Module Replacement
- **Section 3.3 -** Fan Tray Replacement
- **Section 3.4 -** Switch Control Processor Replacement
- **Section 3.5 -** Switch Board Replacement
- **Section 3.6 -** CEC-Plus Replacement

NOTE Hardware components should only be hot-swapped for purposes of replacing a failed unit.

3.1 Network Module Replacement

Network modules are hot-swappable, meaning that they can be removed and replaced with the unit under power. Network modules should only be hot-swapped for purposes of replacing a failed unit. Therefore, they should be replaced with a network module of the same type, the same Series, and with the same number of ports. A network module's type is the class to which the network module belongs (e.g., DS1, OC-3, E3, TAXI, etc.).

If a network module is removed and replaced by a network module of another type or by a network module with fewer ports, all configuration information for that network module's slot will be deleted, and the new network module will be configured with the defaults for its type. For example, if a 4-port Series C OC-3c is replaced by a 4-port Series D OC-3c, the Series D network module will use the same configuration of the Series C network module. Any additional configurable variables will contain OC-3c defaults. If a 4-port OC-3c is replaced by a 4-port DS1, all configuration information for that slot will be deleted and the DS1 will be initialized with DS1 defaults. If a 6-port DS1 is replaced by a 2-port DS1, all configuration information for the slot will be deleted, and the new DS1 initialized with DS1 defaults. If a network module is placed into a previously vacant slot, it will be initialized into the default state appropriate to that type of network module.

3.1.1 Hot-swapping Network Modules

When removing or replacing network modules, use the following procedure:

WARNING!

To reduce risk to the user and to prevent damage to equipment, it is recommended that you use a grounding strap when handling this or any other component.

NOTE

All AMI sessions should be terminated before swapping network modules of different types.

CAUTION

If a network module is removed and replaced by a network module of another type or with fewer ports, all configuration information for that network module's slot will be deleted, and the new network module will be configured with the defaults for its particular type.

1. Label and remove all network connections from the ports on the network module.
2. Loosen the two captive fasteners on either edge of the network module using a straight screwdriver.
3. Remove the network module from the switch by pulling firmly but carefully on the captive fasteners (Figure 3.1).

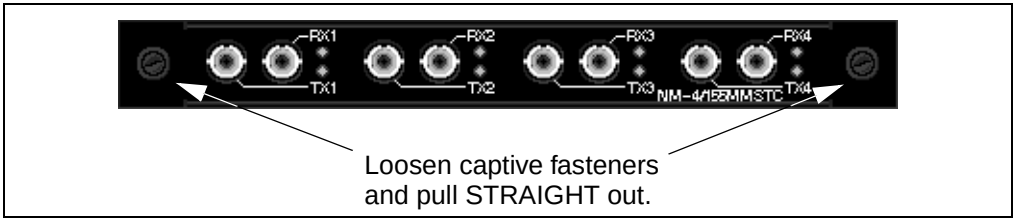

Figure 3.1 - Removal of a Network Module

4. Insert the replacement module by sliding it into the card guides. Push firmly to seat the network module so that the faceplate is flush with the switch. Re-tighten the captive fasteners.

CAUTION

To ensure safety, tighten the captive fasteners with a straight screwdriver.

5. Restore the network connections from Step 1.

NOTE

When necessary, the optical connectors may need to be cleaned. To clean the connector, make sure to use a lint-free cloth saturated with optical-grade isopropyl alcohol to gently wipe the connector surface. Allow the surface to dry before using.

3.2 Power Supply Module Replacement

The power supplies in the *TNX*-210 and the *TNX*-1100 are hot-swappable, meaning that they can be removed / replaced without having to shut down the switch.

WARNING!

DO NOT attempt to replace a power supply module without reading this section. Serious injury to the user or damage to the equipment may result if proper replacement procedures are not followed.

3.2.1 Hot-swapping a *TNX*-210 AC Power Supply

The procedure for hot-swapping a *TNX*-210AC power supply module is as follows:

WARNING!

To reduce risk to the user and to prevent damage to the equipment, it is recommended that you use a grounding strap when handling this or any other component.

NOTE

A replacement AC power supply will not function in a DC-equipped *TNX*-210, and vice-versa. However, no damage will result if this occurs.

1. Determine which power supply is defective by either consulting *ForeView* or *Element Manager* to tell which is the bad supply, or by examining the power supplies themselves. A red LED or an extinguished LED indicates the failed supply. Power supply “1” is on the left-hand side of the unit, and power supply “2” is on the right-hand side (while facing the front of the unit).

WARNING!

Failure to perform Step 2 can result in serious injury to the user or damage to the equipment.

2. Turn OFF the power switch on the front of the defective power supply.
3. Unplug and remove the power cord from the rear of the unit that corresponds to the failed supply. When facing the front of the unit, power supply 1 (on the left) corresponds to the top power cord in the rear.
4. Unscrew the two captive fasteners on the front of the unit using a straight blade screwdriver.
5. Pull forward on the handle to remove the sliding tray.
6. Unscrew the four nuts securing the inner tray to the sliding tray.
7. Lift the inner tray from the sliding tray.
8. Place the new power supply inner tray assembly in the sliding tray and screw down the four nuts securing the inner tray.
9. Check to see that the fuses on the new unit are of the same type and rating as the fuses in the replaced power supply. The fuses should be 4A, 240V.

WARNING!

Failure to perform Step 10 can result in serious injury to the user or damage to the equipment.

10. Ensure that the power switch on the new power supply is turned OFF before inserting it into the enclosure.
11. Push the sliding tray back into the enclosure, being careful to align the card guides.
12. To ensure maximum safety, and to ensure that the connectors have seated properly, re-tighten the captive fasteners using a straight blade screwdriver.
13. Once the new supply is completely installed, re-insert and plug in the power cord, and turn the power switch to the ON position.

3.2.2 Hot-swapping a *TNX*-210 DC Power Supply

The procedure for hot-swapping a *TNX*-210 DC power supply module is as follows:

WARNING!

To reduce risk to the user and to prevent damage to the equipment, it is recommended that you use a grounding strap when handling this or any other component.

NOTE

A replacement DC power supply will not function in an AC-equipped *TNX*-210, and vice-versa. However, no damage will result if this occurs.

WARNING!

This power supply module is intended for -48 VDC nominal applications. It is recognized that transient voltages fluctuations may occur which will make this nominal value appear higher or lower. The lower rating is 36 VDC and the upper limit is 72 VDC. Voltages greater than 60 VDC are considered hazardous and have a increased risk of causing personal injury. It is for this reason that increased safety precautions must be taken when this supply is installed where the voltages may exceed 60 VDC for any period of time. FORE requires the use of a power source rated for at least 72 VDC. In these cases, as in all installations, the chassis must be earth grounded according to the intended topology and local requirements.

1. Determine which power supply is defective by either consulting *ForeView* or *Element Manager* to tell which is the bad supply, or by examining the power supplies themselves. A red LED or an extinguished LED indicates the failed supply. Power supply “1” is on the left-hand side of the unit, and power supply “2” is on the right-hand side (while facing the front of the unit).

WARNING!

Failure to perform Steps 2 or 3 can result in serious injury to the user or damage to the equipment.

2. Turn OFF the power switch on the front of the failed power supply. Wait for 10 seconds before moving on to Step 3.
3. Shut off DC power to the feed wires of the failed supply. Typically, each *TNX*-210 resides in its own circuit on a Breaker Interface Panel (BIP). Turning off the top circuit breaker on the BIP will remove DC power to the feed wires.
4. On the rear of the unit, remove the protective plastic cover from the terminal block, exposing the DC feed wires.
5. Remove the feed wires from the terminal corresponding to the failed supply. The terminal strip on the right side (while facing the rear of the unit) corresponds with power supply 1 (on the left side while facing the front of the unit).
6. Unscrew the two captive fasteners on the front of the failed supply using a straight blade screwdriver.
7. Pull forward on the handle to remove the sliding tray.
8. Unscrew the four nuts securing the inner tray to the sliding tray, then lift the inner tray from the sliding tray.
9. Place the new power supply inner tray assembly in the sliding tray and screw down the four nuts securing the inner tray.

WARNING!

Failure to perform Step 10 can result in serious injury to the user or damage to the equipment.

10. Ensure that the power switch on the new power supply is turned OFF before inserting it into the enclosure.
11. Push the sliding tray back into the enclosure, being careful to align the card guides.
12. To ensure maximum safety, and to ensure that the connectors have seated properly, re-tighten the two captive fasteners using a straight blade screwdriver.

WARNING!

Be sure to observe polarity in the following step. Failure to observe polarity may cause permanent damage to the unit and may cause injury to the user.

NOTE

The DC powered *TNX*-210 is designed to be connected to a -48V DC power source.

13. Once completely installed, reconnect the feed wires to the terminal strip on the rear of the unit. Ensure that #16 AWG or larger wire is used for the DC feed wires. The screw terminals are #6 screws. The 48-volt feed wires should be attached to the terminal strips using wire terminals designed to fit #6 studs. FORE Systems recommends the use of either ring terminals or locking forked tongue terminals.

    The higher potential wire (power) should be connected to the positive (+) terminal, and the lower potential wire (battery return) should be connected to the negative (-) terminal. A third, chassis ground wire should be connected to the center terminal (⏚) and connected to an earth ground.
14. Once the feed wires have been connected, replace the protective cover on the terminal block.
15. Return DC power to the feed wires coming into the supply by turning on the top breaker on the BIP.
16. Turn the circuit breaker switch on the front of the power supply to ON (up).

3.2.3 Hot-swapping a *TNX*-1100 AC Power Supply

The procedure for replacing a *TNX*-1100 AC power supply module is as follows:

WARNING!

A replacement DC power supply should never be placed in a *TNX*-1100 that already contains an AC power supply, and vice-versa. If these instructions are not heeded, there is a risk of electrical shock, danger to personal health, and serious damage to the equipment.

WARNING!

It is highly recommended that you use a grounding strap when handling this or any other component.

1. Determine which power supply is defective by either consulting *ForeView* or *Element Manager* to tell which is the bad supply or by examining the power supplies themselves. An extinguished “PWR OK” LED or an illuminated “FAULT” LED indicates the failed supply. On a *TNX*-1100, power supply “1” is in the slot labeled PS1 on the chassis (top), while power supply “2” is in the slot labeled PS2 on the chassis (bottom).

WARNING!

Failure to perform Step 2 can result in serious injury to the user or damage to the equipment.

2. Turn OFF the power switch on the front of the defective power supply. Wait at least one (1) second after turning off the power before moving on to the next step.
3. Disconnect the AC line from the front of the defective power supply.
4. Unscrew the two captive fasteners (one on the upper, left corner of the faceplate and one on the lower, right corner of the faceplate) using a straight blade screwdriver.
5. Pull forward on the power supply’s handle (located below the power switch and AC plug) to remove it from the chassis.

6. Set the failed supply aside and prepare to install the new one.

WARNING!

Failure to perform Steps 7 or 8 can result in serious injury to the user or damage to the equipment.

7. Ensure that the power switch on the new AC power supply is turned OFF before inserting the supply into the metal enclosure.
8. Check to see that the fuses on the new unit are rated at 15A, 250V.
9. Set the supply on the guide rails in the enclosure so that the supply is properly aligned in the slot. Position the supply so that the rear connectors are on top.
10. Once the rails are properly aligned, push on the handle on the front of the supply to slide it back into the chassis. Press firmly to ensure that the connectors on the rear of the supply have mated with those on the backplane.
11. To ensure maximum safety and to ensure that the connectors have mated properly, tighten the two captive fasteners on the front of the supply using a straight blade screwdriver.
12. Once completely installed, you may reconnect the AC line and turn the power switch to the ON position.
13. After a second or two, the PWR OK LED on each supply illuminates green, indicating that the supply is functioning properly.

3.2.4 Hot-swapping a *TNX*-1100 DC Power Supply

The following procedure describes how to safely replace a DC power supply in a *TNX*-1100 that is under power. The switch will operate properly with one power supply while the failed supply or power source is replaced or repaired.

NOTE

You will need a spare DC power supply and an allen wrench to complete the following procedure.

WARNING!

A replacement DC power supply should never be placed in a *TNX*-1100 that already contains an AC power supply, and vice-versa. If these instructions are not heeded, there is a risk of electrical shock, danger to personal health, and serious damage to the equipment.

1. Determine which power supply is defective by examining the power supply LEDs, either locally or via *ForeView* or *Element Manager*.

NOTE

A +5V Fault, Overcurrent condition, or Output Fault (while Input Fault is not illuminated) constitutes a power supply failure. Refer to Table 1.11 in Chapter 1 of this manual for initial troubleshooting information.

Power supply “1” is in the slot labeled PS1 on the chassis, and power supply “2” is in the slot labeled PS2 on the chassis.

WARNING!

Failure to perform step 2 or step 3 can result in serious injury to the user or damage to the equipment.

2. Turn OFF (down) the circuit breaker switch on the failed power supply.

3. Shut off DC power to the feed wires of the failed supply. Typically, each *TNX*-1100 resides in its own circuit on a Breaker Interface Panel (BIP). Turning off the top circuit breaker on the BIP removes DC power to the feed wires.
4. If you are using the three-pin D-subminiature connector, remove the female connector (leading to the power source) from the male connector on the power supply and proceed to step 7, otherwise proceed to step 5.
5. Remove the protective plastic cover from the terminal block, exposing the DC feed wires.
6. Remove the feed wires from the front of the unit.
7. Remove the four retaining screws that secure the power supply in the chassis using a 3/32-inch Allen wrench.
8. Pull forward on the ejection/insertion handles to remove the failed supply.

WARNING!

Failure to perform step 9 can result in serious injury to the user or damage to the equipment.

9. Ensure that the circuit breaker switch on the new power supply is turned OFF (down) before inserting it into the enclosure.
10. Carefully align the guide rails on the new DC power supply in the slot, then push on the ejection/insertion handles to slide it into the enclosure.
11. To ensure maximum safety and to ensure that the connectors have been seated properly, re-tighten the four retaining screws using a 3/32-inch Allen wrench.
12. Once completely installed, reconnect the power supply to the dry -48 volt DC feed wires that were removed in step 4 or step 6.
13. If you are using the three-pin D-subminiature connector, insert the female connector (leading to the power source) into the male connector on the power supply and secure it using the screws on the top and bottom of the connector. You may proceed to step 16.

CAUTION

Be sure to observe polarity in the following step.

NOTE

The DC powered *TNX*-1100 is designed to be connected to a -48V DC power source.

14. If you are using the three-wire terminal block, secure the feed wires to the terminal strip on the front of the unit. Ensure that the DC feed wires are #6-#10 AWG. The screw terminals are #10 screws. The 48-volt feed wires should be attached to the terminal strips using wire terminals designed to fit #10 studs. FORE Systems recommends the use of either ring terminals or locking forked tongue terminals.

    The higher potential wire (Grnd) should be connected to the positive (+) terminal, and the lower potential wire (-48v) to the negative (-) terminal. A third, chassis ground wire should also be connected to the center terminal (⏚) and connected to an earth ground.
15. Once the feed wires have been connected, replace the protective cover on the terminal block.
16. Return DC power to the feed wires coming into the supply by turning on the top breaker on the BIP.
17. Turn the circuit breaker switch on the front of the new supply to the ON (up) position.
18. Ensure that the green “Power OK” LED on the new supply is illuminated. If not, troubleshoot the problem using Table 1.11 in Chapter 1.

NOTE

If you have any questions about or problems, please contact FORE Systems Technical Assistance Center as described in the Preface of this manual.

3.3 Fan Tray Replacement

The *TNX*-1100 has a removable fan tray with large fans that cool the switch hardware and power supply modules. Located at the base of the upright unit, the fan tray is removable from the front of the unit and is hot-swappable, meaning that it can be replaced while the *TNX*-1100 is under power. The procedure for replacing a fan tray is as follows:

WARNING!

It is highly recommended that you use a grounding strap when handling this, or any other component.

1. Remove the four retaining screws at the top of the fan tray with a 3/32-inch Allen wrench.
2. Remove the fan tray by pulling it away from the switch unit.
3. Set the old fan tray aside and place the new fan tray in front of the vacant slot in the *TNX*-1100.
4. Insert a new fan tray in the slot and slide it all the way into the chassis. Seat the connectors by pressing firmly on the unit (this will apply power to the fan tray).
5. Once seated, replace the four screws removed in Step 1 above. This will properly secure the unit in the chassis.

CAUTION

Do not run the unit for any great length of time without the fan tray installed or the unit will shut itself down because of an overtemperature condition.

3.4 Switch Control Processor Replacement

The following procedure explains how to remove a switch control processor (SCP) from a switch fabric and install a new SCP.

You must back up the configuration database (CDB) on the existing SCP before performing this procedure. Once the new SCP has been installed, you must retrieve the CDB and download it to the new SCP. Instructions for backing up your CDB can be found in the *ATM Management Interface (AMI) Manual*.

CAUTION

Failure to backup and restore your CDB can result in lost configuration data.

WARNING!

It is highly recommended that you use a grounding strap when handling this or any other component.

Do not attempt to remove or replace an SCP without first removing all connections to the SCP (i.e., serial or Ethernet connections).

The i960HA and Pentium-based SCPs are hot-swappable ONLY if replacing the SCP with the same type (HA to HA or Pentium to Pentium).

When using dual SCP configuration, you must either use two i960-based HA SCPs or two Pentium-based SCPs in the same switch board. Do not use one of each. However, in the *TNX*-1100, you can have two i960-based HA SCPs in one board and two Pentium-based SCPs in another board.

Both HA SCPs must have the same FLASH size (both 4MB or both 8MB) and the same DRAM size (both 16MB or both 32MB). Otherwise, failover cannot occur.

CAUTION

The SCP-ASXP5-266 is not supported in a SM-1100 fabric in a *TNX*-1100. It is only supported in a SM-1100-B fabric in a *TNX*-1100.

1. When replacing an i960CA or i960CF SCP, turn the power switch on any installed AC power supplies to the OFF position; unplug and remove all power cords. On any installed DC power supplies, turn the circuit breaker OFF (down) and shut off DC power to the feed wires of the supplies by turning off the top circuit breaker on the Breaker Interface Panel (BIP).
2. Loosen the captive fasteners on either edge of the SCP using a straight screwdriver.
3. Pull firmly and carefully on the two captive fasteners, removing the SCP from the switch fabric as shown in Figure 3.2.

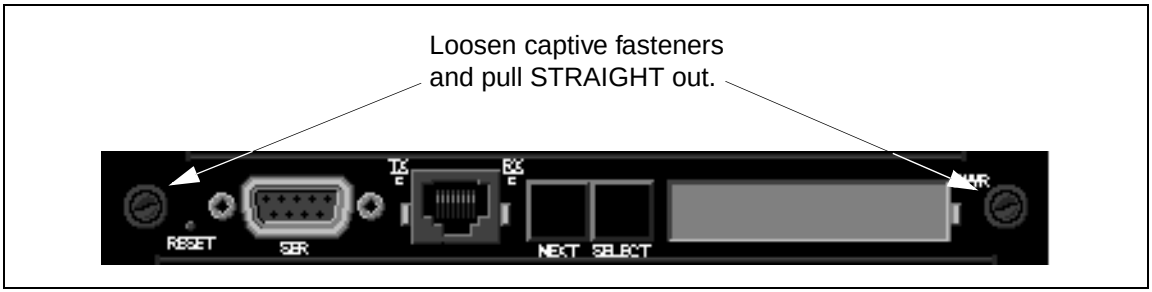

Figure 3.2 - Removal of an SCP

4. Set the old SCP aside.

CAUTION

Take care to properly align the SCP in the card guides in the following step.

5. Insert the new SCP into the switch fabric by sliding it into the card guides.
6. Push firmly to seat the SCP so that its faceplate is flush with the front panel of the switch board.

7. Re-tighten the captive fasteners with a straight screwdriver to ensure the SCP is secure.
8. Plug any necessary power cords into the switch, then plug into an approved outlet. Turn power switches on any AC installed power supplies to the ON position. On any installed DC power supplies, return DC power to the feed wires coming into the supplies by turning on the top breaker on the BIP. Then, turn the circuit breaker switch on the front of the supplies to the ON (up) position.

To restore the CDB, you must connect a terminal to the SCP's serial port and open a session in AMI. After logging in, you must configure the appropriate interface(s) that will allow you to connect to the remote host to which you backed up the CDB. For more information on configuring interfaces on the switch, see Section 2.7, "Configuring IP Addresses," in this manual.

Once you have configured the proper interfaces to allow a connection to the remote host, enter the following parameters at the prompt:

`operation cdb restore` *`<host>:<backup file name>`*

You will be prompted to verify this command, because the switch will be rebooted once the CDB has been restored. Type **`y`** and press **`<ENTER>`** at the prompt.

Once the switch reboots, the PVCs will be re-established provided that none of the network modules were replaced after the SCP was removed and provided that all of these steps have been performed properly.

NOTE

There are two versions of the i960-based HA SCPs: a version with 4MB of FLASH and a version with 8MB of FLASH. If you are using dual SCP configuration and you want to upgrade your two 4MB i960HAs to two 8MB i960HAs, use the steps outlined in the *SCP-ASXHA Switch Control Processor Release Notes*.

3.5 Switch Board Replacement

The switch boards in the *TNX*-1100 are hot-swappable, meaning that they can be removed and replaced with the chassis under power. The proper procedure for hot-swapping a switch board is as follows:

WARNING!

It is highly recommended that you use a grounding strap when handling this, or any other component.

CAUTION

Ensure that any unpopulated switch board slots are covered with a blank panel before turning on your *TNX*-1100. Operating the switch with any of these slots left open can cause a significant temperature rise in a very short time.

NOTE

As a precaution, it is recommended that you back up your CDB before performing this process. Instructions for backing up your CDB can be found in the *ATM Management Interface (AMI) Manual*.

NOTE

Replace a switch board ONLY with another switch board of the same type (i.e., an SM-1100 switch board with an SM-1100 switch board, or an SM-1100-B switch board with an SM-1100-B switch board).

NOTE

To ensure that the switch will work with the previously established network configuration, the relative position of the network modules must not change when you transfer them to the new fabric. For example, an OC-3c network module that is removed from slot A of the old switch fabric must be installed in slot A of the new switch fabric. Therefore, it is recommended that you label all network connections and network modules before removing them.

NOTE

To maintain your CDB, the SCP must be removed before the network modules are removed and it must be installed in the new fabric after the network modules have been installed.

1. Log out of all open AMI sessions on the switch board that is to be replaced.
2. Remove the SCP from the old switch board using the instructions found in Section 3.4 of this manual. Place the SCP on a clean, static-free work area.
3. Label and remove all fibers or coaxial cables connected to the ports on the switch board that is to be replaced. Then label and remove all network modules from the old switch board using the instructions found in Section 3.1 of this manual. Place the network modules on a clean, static-free work area.
4. Unscrew the retaining screws at the top and bottom of the board using a 3/32-inch Allen wrench. On a *TNX*-1100, press the top black locking tab up towards the top and bottom black locking tab down towards the bottom of the chassis until they are parallel with the front panel of the switch.
5. Using the tabs as a handle, pull the switch board out of the chassis.

CAUTION

Make sure the replacement board is properly aligned in the slot in the next step.

6. Carefully slide the replacement board into the chassis using enough force to ensure that the connectors on the board mate with the connectors in the chassis.
7. Be sure to align the holes properly and screw the board into the chassis using the screws at the top and bottom of the board. Tighten until snug, but do not overtighten.
8. Re-install the network modules using the instructions found in Section 3.1 of this manual. Reconnect all fibers or coaxial cables to the ports.
9. Re-install the SCP using the instructions found in Section 3.4 of this manual.

Once the SCP has been installed and the system reboots, the PVCs will be re-established if all of the steps have been performed correctly and in the proper sequence.

3.6 CEC-Plus Replacement

The following procedure explains how to remove a Timing Control Module (TCM) from the *TNX*-1100 CEC-Plus card carrier and install a new one.

WARNING!

It is highly recommended that you use the included grounding strap when handling this or any other component.

CAUTION

Do not attempt to remove or replace a TCM without first removing all connections to the ECP (i.e., serial, Ethernet, relay, or BITS clock connections).

1. Loosen the four captive fasteners on either edge of the TCM using a straight screwdriver.
2. Pull firmly and carefully on the four captive fasteners, removing the TCM from the card carrier as shown in Figure 3.3. Set the old TCM aside.

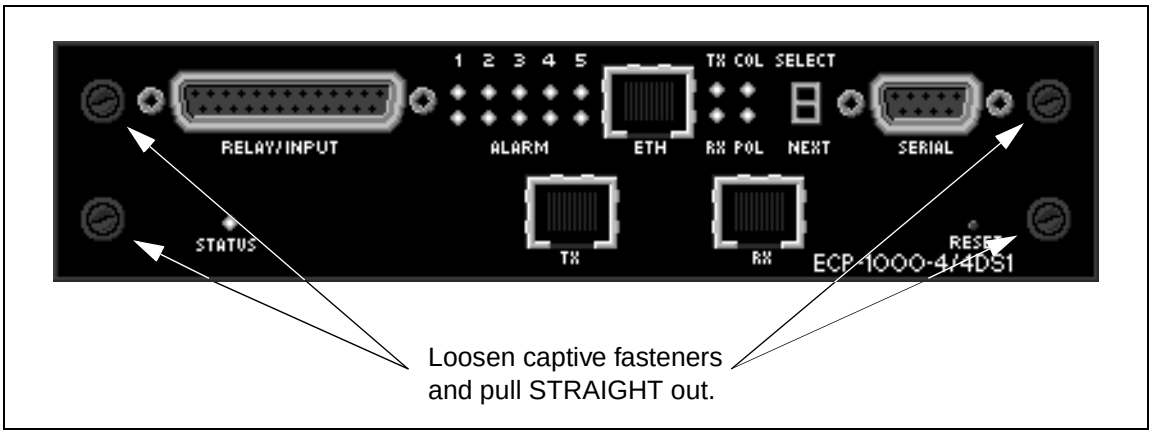

Figure 3.3 - Removal of the TCM

3. Orient the new TCM the same way as the old one (right side of TCM, with DB-9F connector, toward the top of the switch chassis) and carefully align it in the vacant card carrier slot.
4. Insert the new TCM into the card carrier by sliding it into the card guides.
5. Push firmly to seat the TCM so that its faceplate is flush with the front panel of the card carrier.
6. Re-tighten the captive fasteners with a straight screwdriver to ensure the TCM is secure.

If the TCM being installed is the first one inserted in the chassis, it will boot as master. If the TCM being installed is the second TCM in the chassis, it will boot as standby.

WARNING!

Do not attempt to insert a card which is not a CEC-Plus into the CEC-Plus slot.

NOTE

For more information about the CEC-Plus in the *TNX*-1100, refer to the *CEC-Plus Installation Manual*.

CHAPTER 4 Software Upgrade Instructions

This chapter details the steps necessary to upgrade the *ForeThought* software on your *TNX* ATM switch. Some instructions in this chapter apply only when upgrading certain switches in certain situations, and you may or may not have to go through every section. Read the following list to better understand how the instructions are ordered before moving on:

- **Section 4.1 -** Obtaining the Software Upgrade File
- **Section 4.2 -** Requirements for Upgrading with Mini Loader
- **Section 4.3 -** Performing the Software Upgrade
- **Section 4.4 -** Changing between Multiple Versions of Software
- **Section 4.5 -** Booting and Upgrading with Mini Loader
- **Section 4.6 -** Using bootp to Download Software to the Switch
- **Section 4.7 -** Booting via the Serial Port

CAUTION

As a precaution, it is recommended that you back up your configuration database (CDB) before beginning the upgrade process. For more information, see the *ATM Management Interface (AMI) Manual*.

NOTE

For dual SCP configuration, the SCPs in a *TNX*-210 and a *TNX*-1100 must be upgraded individually. For information on upgrading the standby SCP, see Section 4.3.3.

NOTE

If you have configured the switch to use TFTP as the transfer protocol default) using the **`conf system protocol`** command, then the **`operation upgrade`** command can be issued one of two ways, depending on how TFTP is configured on the UNIX workstation that holds the upgrade file. For more information, see Section 4.3 and Section 4.6.4.

4.1 Obtaining the Software Upgrade File

Before beginning the upgrade process, you will need the upgrade file from FORE Systems. To obtain the file via FTP, you must have FTP access.

4.1.1 Obtaining the Software Upgrade File via FTP

The software upgrade can be retrieved from FORE Systems via anonymous FTP using the following procedure. First, contact FORE Technical Support to obtain the appropriate directory and list of file names. Once you have this information, FTP to `ftp.fore.com`. and log in as `anonymous`. Enter your full e-mail address (e.g., `jdoe@somewhere.com`) when you are prompted for a password.

NOTE For security reasons, your password is not echoed.

Once you connect to FORE's FTP site (you will see the `ftp>` prompt), you must change to the directory indicated to you by the FORE Technical Support staff member. This directory contains the *ForeThought* software upgrade files and the .readme files which contain important information about the software release.

The .readme files can be retrieved as ASCII text. However, before you retrieve the software files, you must switch the transfer mode to `binary`.

The following script is an example of how you might retrieve the software and .readme files. User input is shown in **`bold courier`** font.

```
server-jdoe:52=> ftp ftp.fore.com
Connected to ftp.fore.com.
220-FORE Systems Inc. FTP Server
220-
220-This FTP site is only for authorized customers and employees of FORE
220-Systems, Inc.  Unauthorized access or use is subject to discipline,
220-criminal, and/or civil sanctions.  This system will be monitored for
220-unauthorized users.  All users consent to monitoring.
220-
220 ftp.fore.com FTP server (Version wu-2.4(4) Tue Apr 11 13:53:34 EDT 1995) ready.
Name (ftp.fore.com:jdoe): anonymous
331 Guest login ok, send your complete e-mail address as password.
Password: TYPE YOUR FULL E-MAIL ADDRESS HERE <ENTER>
230 Guest login ok, access restrictions apply.
ftp> cd /directory/directory/directory <ENTER>
250 CWD command successful.
ftp> get tnx-i960_6.0.0_1.3304.readme <ENTER>
200 PORT command successful.
150 Opening ASCII mode data connection for tnx-i960_6.0.0_1.3304.readme (51578 bytes).
226 Transfer complete.
local: tnx-i960_6.0.0_1.3304.readme remote: tnx-i960_6.0.0_1.3304.readme
51578 bytes received in 1 seconds (50 Kbytes/s)
ftp> binary <ENTER>
200 Type set to I.
ftp> get tnx-i960_6.0.0_1.3304.Z <ENTER>
200 PORT command successful.
150 Opening BINARY mode data connection for tnx-i960_6.0.0_1.3304.Z (8147013 bytes).
226 Transfer complete.
local: tnx-i960_6.0.0_1.3304.Z remote: tnx-i960_6.0.0_1.3304.Z
8147013 bytes received in 2.3e+02 seconds (35 Kbytes/s)
ftp> quit <ENTER>
221 Goodbye.
```

If you have retrieved a software file with a .Z extension, then you need to uncompress the file using the following command:

uncompress <filename>

where *<filename>* represents the full name of the upgrade file you have retrieved. For example, using the software file from the previous example:

uncompress tnx-i960_6.0.0_1.3304.Z

NOTE

If you have retrieved a software file with a .tar extension, do NOT untar it. The **`operation upgrade`** command in the ATM Management Interface (AMI) will expect the upgrade file to be in tarfile format.

NOTE

The tarfile is specific to the processor type. Make sure you retrieve the correct tarfile for the processor type (i960-based or Pentium-based) and the switch platform you are using (e.g., TNX-1100).

If you have difficulty retrieving the files or if you have any other questions regarding the FTP site, please contact FORE Systems' Technical Assistance Center (TAC) by using one of the methods described in the Preface of this manual.

Once you have successfully retrieved the software upgrade file via FTP, follow the instructions in Section 4.3 in this manual.

4.2 Requirements for Upgrading with Mini Loader

If you are using a switch that has less than 4 MB FLASH, you may only be able to have a single switch software image reside on the switch. Before upgrading, use the **`oper env cpu`** AMI command and look at the `FlashSize` field to check the amount of FLASH. If there is less than 4 MB FLASH, it is recommended that you first download the Mini Loader to your FLASH so you will have upgrade capabilities if there is any problem with your current image.

NOTE

This section applies only if you need to use Mini Loader to help you perform the upgrade. If you do not need to use it, proceed to Section 4.3 in this manual.

The following steps are necessary when upgrading with the Mini Loader:

1. You should have already downloaded the software upgrade file to a UNIX workstation.
2. Download the Mini Loader software to the same UNIX workstation as you did the upgrade file (see Section 4.2.1 in this manual).
3. Delete the previous version of software from FLASH (see Section 4.2.2 in this manual).

CAUTION

Make sure you do not delete the active version of switch software until step 5.

4. Upgrade your switch to Mini Loader (see Section 4.2.3 in this manual).
5. Delete the active version of switch software from FLASH (see Section 4.2.4 in this manual).
6. Perform the software upgrade (see Section 4.3 in this manual).

4.2.1 Downloading the Mini Loader Software

You can obtain the Mini Loader software just as you obtained the software upgrade file, via FTP. If you are obtaining the Mini Loader software via FTP, follow the same instructions as in Section 4.1.1 of this manual, but substitute the Mini Loader filename for the upgrade filename.

4.2.2 Emptying the FLASH

Once you have obtained the software upgrade file and the Mini Loader software, you must open an AMI session and delete all previous versions of switch software except your current version of switch software from the FLASH of the switch being upgraded.

For example, if you are running FT 6.0.x and you still have an image for FT 5.2.0 in FLASH, you must delete the `foreos.exe` file from the `ft520.x` directory, then delete the `ft520.x` directory itself. Enter something similar to the following at the prompt:

`operation flash delete ft520.x/foreos.exe`

`operation flash delete ft520.x`

If there are any other files or directories stored in FLASH, EXCEPT the active version of switch software, you should delete them according to the above conventions.

CAUTION

Make sure you do not delete the active version of switch software from FLASH until you reach Section 4.2.4 in this manual.

NOTE

If the `CURRENT` pointer is inadvertently deleted, you can recreate the pointer by using the **`operation version`** command and specifying the version.

4.2.3 Upgrading the Switch to Mini Loader

Once you have deleted any extra items from FLASH, you must upgrade the software on your switch to Mini Loader. Before initiating the upgrade, you must ensure that the Mini Loader software resides in the `/tftpboot` directory on the UNIX workstation to which you downloaded the software. See Section 4.6.4 in this manual for instructions on how to create the `/tftpboot` directory (if necessary) and how to move the Mini Loader software into that directory.

Once the Mini Loader software is in the `/tftpboot` directory, enter the following parameters at the prompt:

`operation upgrade <remotehost>:<full path to remotefile>`

In the above example, you must enter the IP address of the UNIX workstation to which you downloaded Mini Loader in place of *<remotehost>*. You must enter the Mini Loader filename in place of *<full path to remotefile>*. Enter something similar to the following at the prompt:

`operation upgrade 204.95.89.91:foreworks-loader.tar`

The switch will initiate a TFTP session with the host workstation, and you will see something similar to the following:

```
Will upgrade directly to flash
{Checking free space on flash}
Writing flash file foreos.exe
```

If the upgrade is successful, the above messages will be followed by "`switch upgrade was successful.`" You will then be prompted to reboot the switch.

```
Reboot the switch [y]?
```

Type **n** and press **<ENTER>** at the prompt.

If the upgrade fails for some reason, try again. First, however, delete the file from FLASH called `UPGRADE/foreos.exe` that will have been created (but is not complete) during the failed upgrade.

If you have problems with the upgrade to Mini Loader, please contact FORE Systems' Technical Assistance Center.

NOTE

After a successful upgrade, `CURRENT` points to an image for Mini Loader in FLASH. If something causes your switch to reboot, it will do so using the Mini Loader software. However, if the switch is rebooted and there is also a `CURRENT` file that points to an existing `foreos.exe`, the switch will boot with that software image rather than with the Mini Loader. Make sure `CURRENT` points to an image for Mini Loader in FLASH.

4.2.4 Deleting the Active Switch Software

Now that Mini Loader is safely loaded on your switch, you can delete the active version of switch software from FLASH. Deleting this file and the directory in which it resides will not affect the operation of your switch. The switch software will continue to run in active memory after its image is deleted from FLASH. Enter something similar to the following at the prompt:

```
operation flash delete ft520.x/foreos.exe

operation flash delete ft520.x
```

These commands will delete the image of the active version of switch software in FLASH, as well as the directory in which it is contained. The parameter `ft520.x` will vary depending on which version of switch software you are currently using.

At this point, you should upgrade your switch to *ForeThought* 6.0.x (see Section 4.3 in this manual).

4.3 Performing the Software Upgrade

The software upgrade is performed using the **`operation upgrade`** command in AMI. The default underlying file transfer mechanism used in the upgrade is TFTP. The first time you upgrade from *ForeThought* 4.x to 5.x or higher, you must use TFTP. However, after you are running *ForeThought* 5.x or higher, for subsequent upgrades, you can change this transfer protocol to FTP by using the **`conf system protocol`** command. (See Part 2 of the *AMI Configuration Commands Reference Manual* for more information about this command. Also, consult the man page for FTP or TFTP on the host machine for more information about these protocols.)

If you are using TFTP, then follow the upgrade instructions in Section 4.3.1 in this manual. If you are using FTP, then follow the upgrade instructions in Section 4.3.2 in this manual.

4.3.1 Upgrading the Software Using TFTP

TFTP can run in “secure” or “unsecure” mode, and it is assumed that your TFTP server is running in secure mode. Therefore, if TFTP is to run properly between, the file(s) being transferred must reside in the `/tftpboot` directory on the source machine (see Section 4.6.4 in this manual for more information).

To perform an upgrade, the switch initiates a TFTP session with the specified host, which searches for the file requested. The host, which is running TFTP, looks for the file in `/tftpboot`. The TFTP process on the server automatically adds “`/tftpboot`” in front of the path or filename specified by the client.

For example, issuing **`oper upgrade 169.144.3.54:tnx-i960_6.0.0_1.3304`** causes the TFTP server to locate and transfer the file `/tftpboot/tnx-i960_6.0.0_1.3304`. For this reason, it is imperative that you place the upgrade file in the `/tftpboot` directory on the workstation to which you downloaded or extracted the file. If this directory does not already exist, it is likely that TFTP is not running on the workstation. See Section 4.6.4 in this manual for instructions on setting up a TFTP server and placing the upgrade file in the `/tftpboot` directory.

Once you have verified your TFTP server and placed the software upgrade file, you need to invoke the upgrade process on the SCP. Log in to AMI and enter the following parameters at the prompt:

`operation upgrade ?`

This will display the specific parameters that you need to enter as follows:

`upgrade` *`<remotehost>:<full path to remotefile>`*

In the *<remotehost>* field, enter the remote machine name or IP address of the workstation which holds the upgrade file. In the *<full path to remotefile>* field, enter ONLY the filename of the upgrade file.

NOTE The *<full path to remotefile>* is the name of the uncompressed file.

For example, you would enter something similar to the following:

operation upgrade 169.144.3.54:tnx-i960_6.0.0_1.3304

You should receive messages similar to the following:

```
Will upgrade directly to flash
{Transfer successful.}

Notice:  A backup cdb for this version of software should be made
in case a downgrade to this version is performed in the future.
```

When prompted to back up the CDB, type **y** and press **<ENTER>**.

```
Do you wish to back up the cdb [y]? y
```

When prompted to enter the host file name, you would enter something similar to the following:

```
Enter host file:169.166.3.56:myswitch.cdb
```

To use the new version of software that you have just loaded, type **y** and press **<ENTER>** or simply press **<ENTER>** to reboot.

```
Reboot the switch[y]? y
```

If the software file that was downloaded does not match the processor type (i960 or P5), the following messages display:

```
Will upgrade directly to flash
{Incompatible software version}

Transfer failed
```

NOTE

If you do not have more than one version of software installed, you can skip this note. If you do have more than one version of software installed, you have an important decision to make now. At this point, the boot pointer has the new software's filename in it. A reboot will load the new version of software to FLASH, and the switch will run the upgraded version when it comes up. If you wish, however, you can still run the old version of software. If you want to use the old version and change to the new version at a later time, enter **n** at the reboot prompt and follow the instructions in Section 4.4 in this manual.

Once the SCP reboots, all active AMI sessions will be terminated on the SCP. You will need to log in to AMI again if you want to begin another session.

NOTE

If something went wrong during the upgrade process, a new file named `UPGRADE` will appear in the FLASH file system and you will not be prompted with the "`Reboot the switch [y]?`" message.

If the upgrade is unsuccessful or if you have any other problems with the upgrade, please contact FORE Systems' Technical Assistance Center.

If you are using dual SCP configuration, once the controlling SCP has been upgraded, the standby SCP can be upgraded without going through the **`operation upgrade`** or bootp process. See Section 4.3.3 for more information.

4.3.2 Upgrading the Software Using FTP

To upgrade the software using FTP, log in to AMI and enter the following at the prompt:

operation upgrade ?

This will display the specific parameters that you need to enter as follows:

upgrade *<remotehost>*:*<full path to remotefile>*

In the *<remotehost>* field, enter the remote machine name or IP address of the workstation which holds the upgrade file. In the *<full path to remotefile>* field, enter the full filename of the upgrade file.

NOTE The *<full path to remotefile>* is the name of the uncompressed file.

For example, you would enter something similar to the following:

operation upgrade 169.144.3.54:tnx-i960_6.0.0_1.3304

Since you are using FTP, you are prompted for the remote userid and password of the remote host from which you are retrieving the upgrade file. For example:

operation upgrade 169.144.3.54:tnx-i960_6.0.0_1.3304

```
Will upgrade directly to flash
remote userid: <remote userid>
remote password: <remote password>
```

Once the proper userid and password are entered, you should receive messages similar to the following:

```
Will upgrade directly to flash
{Transfer successful.}

Notice:  A backup cdb for this version of software should be made
in case a downgrade to this version is performed in the future.
```

When prompted to back up the CDB, you should type **y** and press **<ENTER>**.

```
Do you wish to back up the cdb [y]? y
```

When prompted for the host file name, you would enter something similar to the following:

```
Enter host file:169.166.3.56:myswitch.cdb
```

To use the new version of software that you have just loaded, type **y** and press **<ENTER>** or simply press **<ENTER>** to reboot.

```
Reboot the switch[y]? y
```

If the software file that was downloaded does not match the processor type (i960 or P5), the following messages display:

```
Will upgrade directly to flash
{Incompatible software version}
Transfer failed
```

NOTE

If you do not have more than one version of software installed, you can skip this note. If you do have more than one version of software installed, you have an important decision to make now. At this point, the boot pointer has the new software's filename in it. A reboot will load the new version of software to FLASH, and the switch will run the upgraded version when it comes up. If you wish, however, you can still run the old version of software. If you want to use the old version and change to the new version at a later time, enter **n** at the reboot prompt and follow the instructions in Section 4.4 in this manual.

Once the SCP reboots, all active AMI sessions will be terminated on the SCP. You will need to log in to AMI again if you want to begin another session.

NOTE

If something went wrong during the upgrade process, a new file named `UPGRADE` appears in the FLASH file system and you are not prompted with the "`Reboot the switch [y]?`" message.

If the upgrade is unsuccessful or if you have any other problems with the upgrade, please contact FORE Systems' Technical Assistance Center.

4.3.3 Upgrading the Software on a Standby SCP

If you are using dual SCP configuration, once the controlling SCP has been upgraded, the standby SCP can be upgraded by synchronizing the information on both SCPs. To upgrade the software on the standby SCP, complete the following steps:

1. Log in to AMI and enter the following parameters at the prompt:

```
myswitch::configuration system dualscp> synchronize OS
```

NOTE

Make sure that the FLASH, CDB, password file, LECS configuration file, Securid, Mini Loader, and switch software have been synchronized between SCPs before performing step 2.

CAUTION

When the FLASH is synchronized, all files that are not present on the controlling SCPs' FLASH are immediately deleted from the standby SCP. If there is not enough free space on the standby SCP, the controlling SCP deletes old files from the standby SCP. This may include older copies of the OS, or even the current copy if the OS itself is being synchronized. These files are removed even if autoremove is disabled. However, if there is still not enough free space on the FLASH of the standby SCP, and there are no more files that can be deleted, the synchronization attempt fails.

2. Once synchronization is complete, reset the standby SCP from the active SCP by entering the following at the prompt:

```
myswitch::configuration system dualscp> reset
Reset standby processor [n]? y
```

If the upgrade is unsuccessful or if you have any other problems with the upgrade, please contact FORE Systems' Technical Assistance Center.

NOTE

There are two versions of the i960-based HA SCPs: a version with 4MB of FLASH and a version with 8MB of FLASH. If you are using dual SCP configuration and you want to upgrade your two 4MB i960HAs to two 8MB i960HAs, use the steps outlined in the *SCP-ASXHA Switch Control Processor Release Notes*.

4.4 Changing between Multiple Versions of Software

It is possible to select between multiple versions of installed software at any time (not just during an upgrade procedure), provided that your SCP has at least 4MB of FLASH.

CAUTION

Although you can change the version of software which will run on a switch, it is not recommended that this feature be used except when absolutely necessary. The different software versions vary in functionality, and switching between these versions can result in the loss of certain configuration information on the switch.

You can display all the versions that are installed by typing the following:

```
myswitch::operation flash> dir
 Size       Date         Time      Name
 141        OCT-05-1998  07:47:20  LECS.CFG
 0          OCT-05-1998  07:47:20  FT6.0/
 6          OCT-05-1998  07:47:20  CURRENT
```

However, in this list, `CURRENT` is simply a pointer to the version that will be used as the current switch software during a reboot. To display the version to which `CURRENT` is pointing, as well as all the versions that are installed, type the following:

```
myswitch::operation> version
Software versions installed : FT600.25 FT600.35
Current software version is FT600.25
```

Notice that no parameter for **`version`** was specified above. If no parameter is specified, it will list the current and installed versions, but will not change anything.

In this example, to change the current version of software from `FT600.25` to `FT600.35`, type the following:

```
myswitch::operation> version FT600.35
Current software version is FT600.35
Software versions installed : FT600.35 FT600.25
```

NOTE

By using the **`operation version`** command and specifying a version, you can change the version to which `CURRENT` is pointing.

At this point, the switch is still running `FT600.25`, but `CURRENT` is pointing to `FT600.35`. To make the change complete, enter the following:

```
myswitch::operation> reboot
Are you sure you want to reboot this switch [n]? y
```

When the SCP reboots, it will look to see to which version `CURRENT` is pointing. In this case, it will see `FT600.35` and boot using that version.

4.5 Booting and Upgrading with Mini Loader

NOTE

The instructions in this section are only necessary if you have deleted your active version of switch software from FLASH memory AND lost power to your switch before successfully completing a full software upgrade.

A Mini Loader session can only be accessed via the serial port of the switch. This session can be opened on a terminal connected directly to the switch, via a modem connected to the switch's serial port, through a telnet session to a workstation whose serial port is connected to the switch, etc.

If you are connecting to the switch via a terminal connected to the serial port, make sure you are using a true, "dumb" terminal or a true VT-100 terminal emulation program. If you are connecting to the switch via a modem, see Section 2.6 in this manual for more information about modem configuration. If you want to telnet to a host whose serial port is connected to the switch, one way to start a session with the switch is by using the **`tip`** command.

`tip` establishes a full-duplex terminal connection to a remote host. Once the connection is established, a remote session using **`tip`** behaves like an interactive session on a local terminal.

Once you telnet to the connected host, enter the following at the host prompt:

```
host#  tip -9600 /dev/ttya
```

where `9600` represents the speed to which the switch's serial port has been set and the "`a`" in `ttya` represents the serial port of the workstation having the connection to the serial port of the switch (this value could also be "`b`," as in `ttyb`).

If you were already connected to the switch via the serial port before the switch lost power, you should see something similar to the following when Mini Loader boots the switch:

```
Booting VXWORKS

VxWorks System Boot

Copyright 1984-1996  Wind River Systems, Inc.

CPU: FORE Systems WSCP
Version: 5.3.1
BSP version: 1.0/0
Creation date: Nov 25 1998, 15:01:09
Fore Systems Boot Loader: 6.0.0 (32627)

Press any key to stop auto-boot...
0
auto-booting...

boot device          : fs
processor number     : 0
host name            : host
file name            : /CURRENT/FOREOS.EXE
flags (f)            : 0x0

Decompressing....done.
SBLoader successfully loaded.

Loading fs:/LD6.0/foreos.exe.
Decompressing fs:/LD6.0/foreos.exe ....done.
Starting at 0x108000...

Adding 2670 symbols for standalone.
Done...

VxWorks version: 5.3.1
Kernel version: WIND version 2.5
CPU: FORE Systems WSCP
BSP version: 1.0
Creation date: Dec 30 1998, 19:03:08
```

```
Foreworks_6.0.0 (1.34371)
Copyright (c) 1996 FORE Systems, Inc.
All Rights Reserved

VxWorks
Copyright (c) 1984-1996 Wind River Systems, Inc.
All Rights Reserved

Attaching network interface lo0... done.
Attaching network interface ei0... done.

loader::>
```

If you connect to the switch via the serial port after the switch has lost power, you will probably see nothing on the terminal you are using. Press `<ENTER>` and you should see the `loader::>` prompt.

If Mini Loader does not boot automatically (i.e., you do not see the `loader::>` prompt within one minute), see Section 1.2.2.7 in this manual for more information about manually booting the switch from FLASH. If you cannot get the switch to boot from FLASH, see Section 4.6 in this manual for information on using bootp.

Once the switch boots successfully, however, you will see the `loader::>` prompt. If you are using XMODEM, you can skip to Section 4.5.3 in this manual and proceed with the upgrade. If you are using TFTP or FTP, you must configure several parameters on the switch as described in the next two sections before you can upgrade with Mini Loader.

4.5.1 Setting the IP Address of the Switch

When using TFTP or FTP, the first thing you need to do is set the IP address of the switch being upgraded. Enter the following parameters at the `loader::>` prompt:

`configuration ip <ipaddr> [-n <netmask>] [-b <broadcast>]`

where *<ipaddr>* is the IP address of the switch to be upgraded, *<netmask>* is the IP netmask of the subnet upon which your switch resides, and *<broadcast>* is the broadcast IP address of your network.

4.5.2 Setting the Gateway Address

If the switch you are trying to upgrade is on a different subnet than the host from which you will load the upgrade file, you must provide a proper gateway address in order for the switch to find the host. Enter the following parameters at the `loader::>` prompt:

`configuration gateway <ipaddr>`

where *<ipaddr>* is the IP address of the gateway leading out of the subnet on which the switch resides (see Figure 4.1).

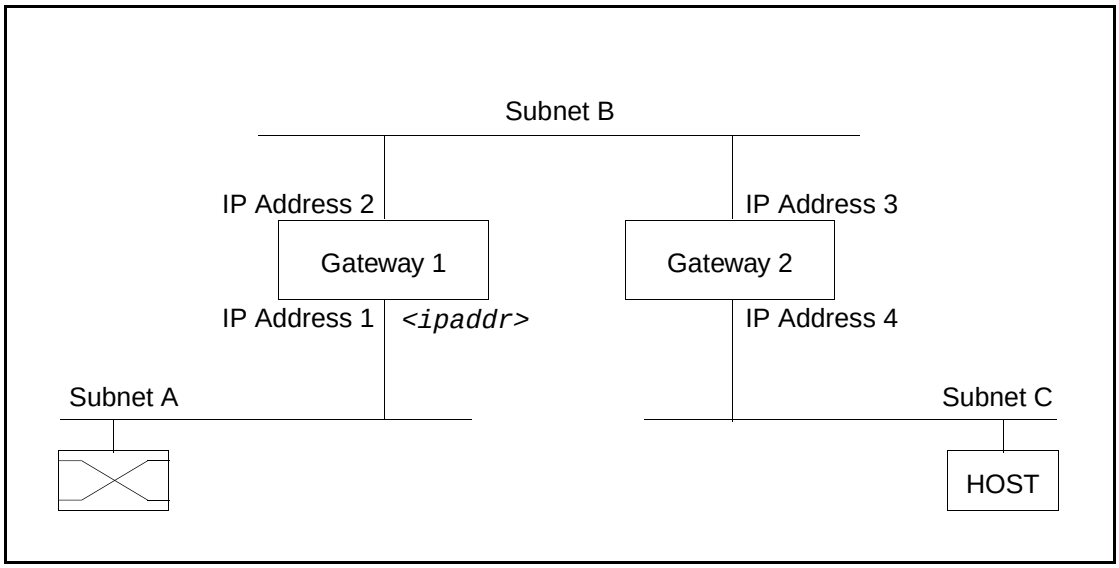

Figure 4.1 - Example of Switch and Host on Different Subnets

4.5.3 Performing the Upgrade

Once you have set the parameters above and cleaned out the FLASH, you may perform the upgrade. Enter the following parameters at the `loader::>` prompt:

upgrade [-d ftp | tftp | xmodem] [-bf *<bootfile>***] [-h** *<serverAddr>***]**

The parameters in this example are defined as follows:

Parameter	Description
ftp | tftp | xmodem	Indicates the transfer mechanism used by Mini Loader to perform the upgrade. **ftp** will force Mini Loader to use FTP. **tftp** will force Mini Loader to use TFTP. **xmodem** will force Mini Loader to use XMODEM. When upgrading over XMODEM, status messages are not output during the upgrade progress. The progress of the transfer should be monitored from the host transferring the tar file.
bootfile	Indicates the full name of the upgrade file (which should be preceded by a backslash). This parameter is not used for XMODEM transfers.
serverAddr	Indicates the IP address of the UNIX workstation on which the upgrade file resides. This parameter is not used for XMODEM transfers.

For example, you might enter something similar to the following at the `loader::>` prompt:

upgrade -d tftp -bf /S_ForeThought_6.0.0_1.13304.tar -h 169.144.3.54

You should see something similar to the following:

```
Doing garbage collection....................
free flash space = 1461726
Transferring file foreos.exe to memory (1060339 bytes)
Transferring file version to memory (9 bytes)
Transferring file sbloader.gz to memory (6631 bytes)
Writing file foreos.exe to flash (1060339 bytes)
Creating flash directory FT600.12
Creating flash file fs:/current
```

Enter the following at the `loader::>` prompt to ensure that an image of the upgrade file resides in FLASH:

flash dir

You should see something similar to the following:

```
<DIR> LD100.0
<DIR> FT600.12
      CURRENT
```

If the upgrade filename appears above the `CURRENT` pointer in FLASH, the upgrade was successful. You should now reboot the switch to begin using the new version of *ForeThought* software. Enter the following at the `loader::>` prompt:

`reboot`

The switch will reboot using the upgraded software. If you have any problems with the upgrade, please contact FORE Systems' Technical Assistance Center.

4.6 Using bootp to Download Software to the Switch

NOTE

Section 4.6 needs to be performed only if your SCP fails to boot from FLASH.

NOTE

Booting via bootp does not upgrade the software on your switch. If you use bootp to start your switch, then you must upgrade the software image in FLASH memory according to the instructions in Section 4.3.

If your SCP fails to boot from FLASH, and no bootp server is available, the output on your terminal will look similar to the following:

```
Switch Control Processor HA-32 Feb 25 1998
Copyright 1994, FORE Systems, Inc.
Copyright 1992, Intel Corporation

Attempt Ethernet boot
ie_attach: ie0  ethernet address 00:20:48:20:00:19
BootP:: Waiting 68 seconds.
BootP:: Waiting 142 seconds.
BootP:: Waiting 202 seconds.“BootP...” in display
BootP:: Waiting 262 seconds.
BootP:: Waiting 322 seconds.
No response to BootP

Attempt Ethernet boot
ie_attach: ie0  ethernet address 00:20:48:20:00:19
BootP:: Waiting 68 seconds.
...
```

This cycle continues indefinitely until the switch is powered down or reset. If you see output similar to this after an upgrade, then you need to set up a bootp server as detailed in the following sections.

4.6.1 Bootp Overview

Each SCP on a *TNX* switch comes with its hardware address (Ethernet MAC address) burned in from the factory, but it does not come preconfigured with an IP address. Any time that the switch is turned on, the SCP attempts to boot from FLASH memory.

If an SCP cannot boot from its FLASH (e.g., the FLASH has recently been initialized or the switch software image in the FLASH is corrupt), it attempts to locate a bootp server on its Ethernet interface.

The SCP broadcasts its Ethernet MAC address in a bootp datagram. Bootp servers on the network that receive that broadcast look up that MAC address in their bootptab file. If they find an entry for that MAC address, they broadcast a reply to the SCP that contains a pointer to a switch software image file residing on the bootp server.

When the SCP sees the bootp reply, it initiates a TFTP session with the bootp server using the path and filename returned in the datagram from the server.

4.6.2 Setting Up a bootp Server

If the process described above is to happen, you need to provide the bootp server with the SCP's Ethernet MAC address and the path to the switch software image.

Before the bootp server will work, you must add or uncomment the following line in `/etc/inetd.conf`:

```
bootps dgram udp wait root /etc/bootpd -d4 /etc/bootptab
```

with the `bootpd` and the `bootptab` files in the `/etc` directory. Also, the following line must appear in `/etc/services`:

```
bootp          67/udp          bootps
```

Before any of the above changes can take effect, `inetd` must re-read the configuration file.

NOTE

If you need to set up a TFTP server, as described in Section 4.6.4 in this manual, the following process is not necessary at this time. Instead, make `inetd` re-read its configuration file after setting up your server.

Determine the process number of `inetd` by entering the following:

```
host: ps -aux | grep inetd
```

Something similar to the following will be displayed:

```
root       216  0.0  0.0   48    0 ?  IW   Jan 27  0:14 inetd
```

where `216` represents the process number of `inetd`.

Now that you know the process number, enter the following command line to make `inetd` re-read its configuration file:

```
host: kill -HUP 216
```


4.6.3 Adding a Switch Entry in the bootptab File

On the workstation that is the bootp server, add the following lines to `/etc/bootptab`:

NOTE The lines given here are an example. See the descriptions that follow for an explanation of the values that you need to enter on your SCP.

```
myswitch:\
            :ht=ether:\
            :ha=002048200019:\
            :sm=255.255.255.0:\
            :bf=upgrade-file:\
            :ip=123.123.123.123:
```

NOTE Make sure the last line added to `bootptab` ends in a colon (:) and not a backslash (\). Otherwise, that line will merge with the next entry, causing your switch to cycle in its attempts to find a bootp server.

NOTE

If the upgrade file lies under a directory within the `/tftpboot` directory, include the relative file path to the upgrade file. For example, if upgrade file lies in `/tftpboot/ft51/upgrade-file`, then `bf=/ft51/upgrade-file`. This is also true when issuing **`oper upgrade`**.

NOTE

If two SCPs are installed in a switch fabric, each SCP must have its own entry in the bootptab file (used for network booting) and a unique IP address. Using only one entry (i.e., the same IP address) causes unpredictable Ethernet ARP behavior (see Section 4.6 in Chapter 4 for more information).

The variables in the previous example are defined as follows:

Variables	Description
myswitch	Indicates the name you have assigned to your SCP.
ht	Indicates the hardware type. For the purposes of switch software image loading, this is **`ether`** (stands for Ethernet).
ha	Indicates the hardware address. This is the Ethernet MAC address of your SCP that is burned in from the factory. If you connect a terminal device to the SCP's serial port, you will see the Ethernet MAC address displayed during the EPROM boot sequence.
sm	Indicates the subnet mask. This is the subnet mask for your network.
bf	Indicates the bootfile. This is *`<your boot image file name>`*. Make sure that the bootfile is the correct file for the SCP type (i960 or P5).
ip	Indicates the IP address of the SCP's Ethernet interface.

NOTE

For more information about bootp, please refer to RFC-1048 and RFC-951.

Once these lines are added, the bootp server is able to tell your SCP where to find the switch software image to be downloaded. The next step in performing the upgrade is to set up a workstation as a tftpboot server and put the upgrade file (the line indicated by `bf` in the previous example) there.

4.6.4 Setting Up a TFTP Server

To set up a TFTP server, on a SunOS 4.1.x system, perform the following steps:

NOTE This procedure only has to be performed the first time that the switch is turned on and each SCP is upgraded. The next time that the software is upgraded, put the upgrade file in `/tftpboot`.

1. In `/etc/inetd.conf`, uncomment the last line shown below so that the file appears as follows:

```
# Tftp service is provided primarily for booting.  Most sites
# run this only on machines acting as “boot servers.”
# Since these can be security holes, they are commented out by default.
#
tftp   dgram   udp    wait    root    /usr/etc/in.tftpd     in.tftpd /tftpboot
```

NOTE `-s /tftpboot` in the line above indicates the server is running secure TFTP. If `-s /tftpboot` does not appear, many of the command examples in this chapter are invalid.

2. Add the following line to `/etc/services`:

```
tftp          69/udp
```

3. Set up the `tftpboot` directory with the following command lines:

```
host: mkdir  /tftpboot
host: cp <upgrade-file>  /tftpboot
```

4. At the root level, determine the process number of `inetd` by entering the following:

```
host: ps -aux | grep inetd
```

Something similar to the following will be displayed:

```
root       216  0.0  0.0   48    0 ?  IW   Jan 27  0:14 inetd
```

where `216` represents the process number of `inetd`.

5. Enter the following command to make `inetd` re-read its configuration file:

```
host: kill -HUP 216
```

4.7 Booting via the Serial Port

NOTE

This section applies only if you have an i960-based HA SCP and need to boot from the serial port.

If the software image in FLASH memory on an HA-based SCP becomes corrupt, it may be necessary to boot your switch via the serial port.

This section details the steps necessary to boot your switch if it will not boot from FLASH.

4.7.1 Requirements

To boot your i960 HA-based SCP over the serial port, you will need the following:

- Switch software file
- Personal computer with a serial communications (COM) port (DB9 Male)
- Terminal emulation or serial communications software
- DB9 Female to DB9 Female, null modem serial cable (supplied with switch)

NOTE

The switch software file must be a **.tar file**, and the serial communications software package you use must support the **X-Modem** transfer protocol.

4.7.2 Performing the Serial Boot

Perform the following steps to boot your switch over the serial port:

1. Connect the COM port of the host PC to the serial port of the HA-based SCP using the supplied serial cable.
2. Run the serial communications program on the host and set the baud rate to 9600.
3. Turn on the power. If the switch is already powered up, reset the SCP.

   The following messages are displayed on the screen of the host PC:

```
Switch Control Processor HA-32 Feb 25 1998
Copyright 1995, FORE Systems, Inc.
Copyright 1992, Intel Corporation

Testing Peripherals...
```

4. As soon as the `Testing Peripherals...` message appears, send a <BREAK> signal from the host PC (refer to the documentation or on-line help of your serial communications program to find out how to send a <BREAK>.)

   The following messages are displayed on the screen of the host PC:

```
Break signal received over serial port. Type “rs” to reset SCP.
SCP Debug Monitor
```

   If the <BREAK> signal was accidentally sent, press the <ENTER> key to get the monitor prompt and type **rs** to reboot the SCP.

NOTE If you want to boot switch software over the serial port, DO NOT press <ENTER> after typing **rs**.

5. At this point, set the speed of your serial communications program to its maximum (but no higher than 128K baud).

6. Press <ENTER> a few times until the following is displayed:

```
SCP Debug Monitor
                i
    Switch Control Processor HA-32 Feb 25 1998
    Copyright 1995, FORE Systems, Inc.
    Copyright 1992, Intel Corporation

    =>
```

7. At the => prompt, type **boot-ser** and press <ENTER>.

   The following message is displayed:

```
Begin transmitting tar file via XMODEM
```

8. Send the switch software file (.tar format) to the switch from the host PC using the serial communications program.

NOTE The download can take anywhere from three to 20 minutes, depending on the speed selected in Step 5 above.

Once the downloaded file is decompressed and executed, an AMI session will be opened over the serial port.

9. Change the host baud rate back to 9600.
10. Log in to the AMI session from the host PC and upgrade the software image on the FLASH of the switch (as described in this chapter).

APPENDIX A Hardware Specifications

This appendix provides information about the hardware for the *TNX* ATM switches and network modules. Information provided includes fiber-optic and UTP cabling specifications; pinout specifications; and hardware and general operating specifications. The products described in this appendix include the following:

- **Section A.1.1 -** TNX-210
- **Section A.1.2 -** TNX-1100
- **Section A.2.1 -** ATM LAN and WAN Network Modules
- **Section A.2.2 -** Mixed Mode Network Modules
- **Section A.2.3 -** Circuit Emulation Service (CES) Network Modules
- **Section A.2.4 -** Frame Relay and FUNI Interworking Network Modules

A.1 *TNX* ATM Switches

FORE Systems offers a complete line of ATM switches that provide scalable ATM connectivity ranging from desktop-to-desktop connections to those spanning wide area networks. *TNX* ATM switches provide high-performance, high-reliability ATM connectivity for enterprise backbones and service provider edge and core multiservice networks. Together with the *TNX* series of ATM LAN and WAN network modules, these switches meet the networking demands of today's distributed, time-critical applications.

All of the *TNX* ATM switches deliver high-performance switching capacity and speed for ATM applications. A non-blocking switching capacity of 2.5 Gbps is continually available on the *TNX*-210. The *TNX*-1100 offers a non-blocking switching capacity of up to 10 Gbps.

This section provides operating, environmental, and general specifications, as well as the hardware requirements necessary to use the different switches.

A.1.1 *TNX*-210

The *TNX*-210 ATM switch has the following specifications:

Features	Specification
Switching Fabric	2.5 Gbps, non-blocking
Number of Ports	2 to 24 ports
Traffic Policing	UPC, dual leaky bucket support
Switch Transit Delay	< 10 microseconds
Connection Setup Time	< 8 milliseconds, up to 450 calls / second / fabric
Maximum Port Speed	622 Mbps (OC-12 / STM-4c)
Ethernet Interface	Standard RJ-45 connector
Serial Interface	DB-9 female connector (i960-based SCP) DB-9 male connector (Pentium-based SCP)
Power	90 - 270VAC @ (autoranging), 2.2 amps maximum 36 - 72 VDC, 7.0 amps maximum @ 36VDC, 200 W
Dimensions	H: 4.75" (12.1 cm), W: 17.5" (44.5 cm), D: 18" (45.7 cm)
Weight	24.9 lbs (11.3 kg) maximum
General Specifications	
Standards Compliance	ITU I.361 ATM Layer, ATM Forum UNI v3.1
Emissions	FCC Part 15, Class A; CISPR 22, Class A; VCCI Class 1
Safety	US: UL 1950; Canada: CSA 22.2; No. 950-M89; Europe: EN 60950
Operating Temperature	0°C to 40°C up to 10,000 ft
Operating Humidity	10 - 90% relative humidity, non-condensing
Storage Temperature	-40°C to 70°C up to 30,000 ft
Storage Humidity	5 to 95% relative humidity, non-condensing

A.1.2 *TNX*-1100

The *TNX*-1100 ATM switch has the following specifications:

Features	Specification
Switching Fabrics	total of 10 Gbps, non-blocking
Number of Ports	2 to 128 ports
Traffic Policing	UPC, dual leaky bucket support
Switch Transit Delay	< 12 microseconds
Connection Setup Time	< 8 milliseconds, up to 525 calls / second / fabric
Maximum Port Speed	622 Mbps (OC-12 / STM-4c)
Ethernet Interface	Standard RJ-45 connector
Serial Interface	DB-9 female connector (i960-based SCP) DB-9 male connector (Pentium-based SCP)
Power	120 / 240VAC @ 60 / 50 Hz, 12.0 / 6.0 amps, 1 kw 36-72VDC 30 amps maximum, 1 kw
Dimensions	H: 24.5" (62.2 cm), W: 19" (48.3 cm), D: 18" (45.7 cm)
Weight	AC: 89.7 lbs (41 kg); DC: 83.1 lbs (38 kg)
General Specifications	
Standards Compliance	ITU I.361 ATM Layer, ATM Forum UNI v3.1
Emissions	FCC Part 15, Class A; CISPR 22, Class A; VCCI Class 1
Safety	US: UL 1950; Canada: CSA 22.2; No. 950-M89; Europe: EN 60950
Operating Temperature	0°C to 40°C up to 10,000 ft
Operating Humidity	10 - 90% relative humidity, non-condensing
Storage Temperature	-40°C to 70°C up to 30,000 ft
Storage Humidity	5 to 95% relative humidity, non-condensing

A.2 *TNX* ATM Network Modules

TNX network modules are the physical ATM port interface cards that provide LAN/WAN connectivity to other ATM switches, ATM-compatible desktop computers and servers, hubs, routers, multiplexers, and carrier ATM services. Currently, network modules provide ATM connections ranging from 1.5 Mbps to 622 Mbps over fiber-optic and copper media.

This section details the technical specifications for all network modules. All *TNX* network modules are hot-swappable, reducing network and maintenance downtime. For more information about hot-swapping network modules, please refer to Chapter 3 in this manual.

See the on-line hardware and software compatibility guides to determine what hardware and/or software supports a particular network module. You can view these guides within the Product Pages of FORE's web site or by contacting FORE Systems TAC.

A.2.1 ATM LAN and WAN Network Modules

This section details the specifications for LAN and WAN network modules.

A.2.1.1 100 Mbps TAXI

The following specifications apply to TAXI network modules (NM-TAXI):

Description	Specification
Port Capacity	Six TAXI ports per module
Data Rate	100 Mbps
Output Buffer	13,312 cell capacity - Series C
Media	Multimode fiber
Max. Line Length	~2 km
Connectors	ST or dual SC
Line Encoding	4B/5B
Loopbacks	Diagnostic loopbacks
Power	-14 to -20 dBm transmit, -14 to -30 dBm receive, 0 to 10 dB path attenuation
Core Diameter	62.5 µm
Fiber Diameter	125 µm
Wavelength	1310 nm
Statistics	TAXI statistics including Header Check Sequence (HCS) errors
Compliance	ATM Forum TAXI UNI v3.1, ITU-T I.432, ANSI X3T9.5, ISO DIS9314-3

A.2.1.2 25.6 Mbps UTP25

The following specifications apply to TP25 network modules (NM-6/25UTPEC):

Description	Specification
Port Capacity	Six TP25 ports per module
Data Rate	25.6 Mbps
Output Buffer	2,560 cell capacity
Media	Cat. 3, 4, or 5 Unshielded Twisted Pair (UTP)
Max. Line Length	~100 m
Connector	RJ-45
Line Encoding	4B/5B with Non-Return to Zero Inverted (NRZI)
Clock Accuracy	±100 ppm
Timing	Primary and secondary 8kHz reference from internal (default) or network
Loopbacks	Line loopback
Impedance	100 ohms
Statistics/Alarms	Header Check Sequence (HCS) errors, cells received (RxCells), cells transmitted (TxCells), and symbol errors
Compliance	ATM Forum 25.6 Mbps specification AF-PHY-0040.000

A.2.1.2.1 Connecting Switches with TP25 Network Modules

The TP25 network modules have a standard RJ45 connector that uses pins 1, 2, 7 and 8. When connecting switches using TP25 network modules, you will need to use a UTP crossover cable with the following specification:

- Pin 1 to pin 7 in both directions.
- Pin 2 to pin 8 in both directions.

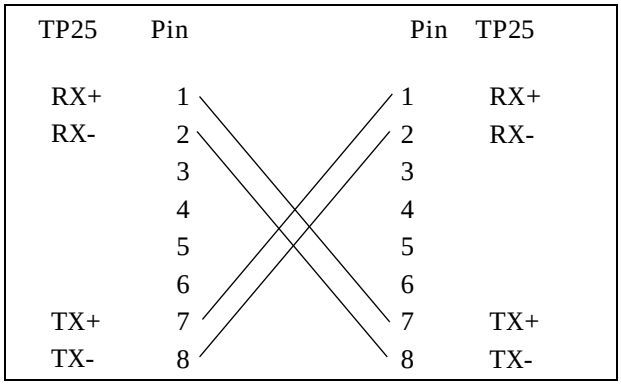

A.2.1.2.2 Connecting Switches with Token Ring Pinouts to *TNX* Switches

Although FORE Systems' switches use the 1, 2, 7 and 8 pin assignment recommended by the ATM Forum, some switches use pins 3, 4, 5 and 6. Connecting one of these switches to a *TNX* switch would require the connections to be mapped as follows:

- Pin 3 to pin 7 in both directions.
- Pin 4 to pin 1 in both directions.
- Pin 5 to pin 2 in both directions.
- Pin 6 to pin 8 in both directions.

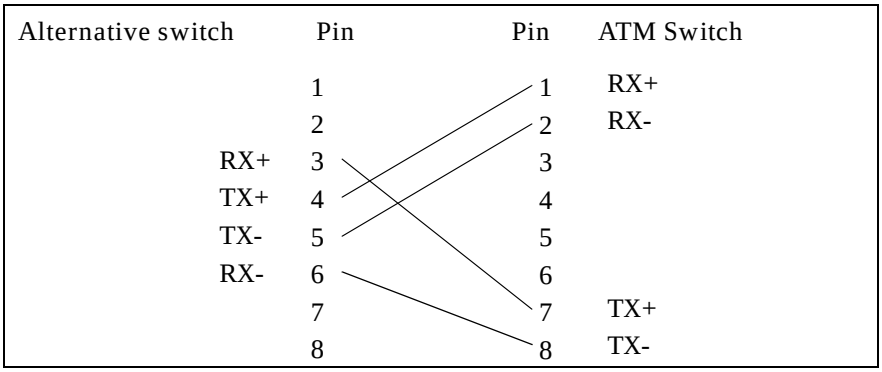

A.2.1.2.3 Connecting Adapters with Token Ring Pinouts to *TNX* Switches

Like switches, some adapters use different pin assignments than those mentioned before. Connecting one of these adapters to a *TNX* switch would require the connections to be mapped as follows:

- Pin 3 to pin 1 in both directions.
- Pin 4 to pin 7 in both directions.
- Pin 5 to pin 8 in both directions.
- Pin 6 to pin 2 in both directions.

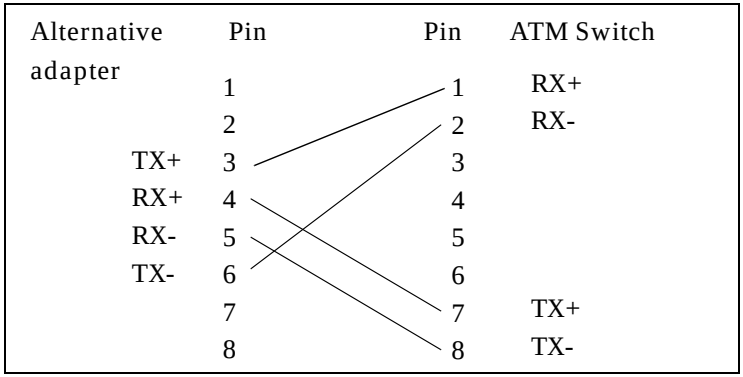

NOTE

The cable used in the connections shown in Section A.2.1.2.2 and Section A.2.1.2.3 must be either a UTP-3 or UTP-5 bidirectional crossover cable, with 8-pin male RJ-45 modular connectors at each end.

A.2.1.3 1.5 Mbps DS1(Series C and D)

The following specifications apply to DS1 network modules:

Description	Specification
Port Capacity	Two or six DS1 ports per module - Series C Four or eight DS1 ports per module - Series D
Data Rate	1.544 Mbps
Output Buffer	13,312 cell capacity - Series C 32,768 cell capacity - Series D
Connection Capacity	Unicast: 11,264 - Series C; 10,240 - Series D Multicast: 1,024 - Series C; 512 - Series D
Media	Unshielded Twisted Pair (UTP)
Max. Line Length	~655 ft
Connector	RJ-48c
Line Encoding	B8ZS
Framing	ESF, optionally PLCP (Series C only)
Clock Accuracy	±32 ppm
Timing	Primary and secondary 8kHz reference from internal (default) or network
Loopbacks	Line, Payload, and Diagnostic loopbacks
Impedance	100 ohms nominal
Statistics/Alarms	Line Code Violations (LCV), framing bit errors(FER), CRC-6 Bit Error Events (BEE), Out Of Frame events (OOF), Header Check Sequence (HCS) errors, cells received (RxCells), cells transmitted (TxCells), signal/clock detection, and AIS indication
Compliance	ATM Forum AF-PHY-0016.000, ANSI/Bellcore T1.102, T1.107, T1.408, TR-TSY-000009, ITU-T G.703, G.704, G.804

A.2.1.3.1 DS1 Pinout Specifications

DS1 network modules have a standard RJ-45 female connector that uses RJ-48C CPE pinouts as illustrated in the table below:

Pin Number	Signal Mnemonic	Signal Name
1	RX+	Receive Data +
2	RX-	Receive Data -
3		Not Used
4	TX+	Transmit Data +
5	TX-	Transmit Data -
6		Not Used
7		Not Used
8		Not Used

A.2.1.4 45 Mbps DS3 (Series C and Series D)

The following specifications apply to DS3 network modules:

Description	Specification
Port Capacity	Two or four DS3 ports per module
Data Rate	44.736 Mbps
Output Buffer	13,312 cell capacity - Series C 32,768 cell capacity - Series D
Media	Coaxial
Max. Line Length	~450 ft
Connector	BNC
Line Encoding	B3ZS
Framing	C-bit parity or clear channel, optionally PLCP
Clock Accuracy	±20 ppm
Timing	Primary and secondary 8kHz reference from internal (default) or network
Loopbacks	Line, Payload, Diagnostic, and Cell loopbacks
Impedance	75 ohms nominal
Statistics/Alarms	Line code violations (LCV), framing bit errors (FER), P-bit and C-bit errors, header check sequence (HCS) errors, cells received (RxCells), cells transmitted (TxCells), signal/clock detection, and AIS indication
Compliance	ATM Forum DS3 UNI v3.1, ANSI/Bellcore T1.102, T1.107, TR-TSY-000009, AF-PHY-0054.000

A.2.1.5 2 Mbps E1 (Series C and Series D)

The following specifications apply to E1 network modules:

Description	Specification
Port Capacity	Two or six E1 ports per module - Series C Four or eight E1 ports per module - Series D
Data Rate	2.048 Mbps
Output Buffer	13,312 cell capacity - Series C 32,768 cell capacity - Series D
Connection Capacity	Unicast: 11,264 - Series C; 10,240 - Series D Multicast: 1,024 - Series C; 512 - Series D
Media	Unshielded Twisted Pair (UTP)
Max. Line Length	~655 ft
Connector	RJ-48c
Line Encoding	HDB3
Framing	CRC-4 Multiframe
Clock Accuracy	±32 ppm
Timing	Primary and secondary 8kHz reference from internal (default) or network
Loopbacks	Line, Payload, and Diagnostic loopbacks
Impedance	120 ohms nominal
Statistics/Alarms	Line Code Violations (LCV), framing bit errors (FER), Far End Block Errors (FEBE), CRC error events, Header Check Sequence (HCS) errors, cells received (RxCells), cells transmitted (TxCells), signal/clock detection, and AIS indication
Compliance	ATM Forum AF-PHY-64.000 R5, ITU-T G.703, G.704, G.804, I.432

A.2.1.5.1 E1 Pinout Specifications

E1 network modules have a standard RJ-45 female connector that uses RJ-48C CPE pinouts as illustrated in the table below:

Pin Number	Signal Mnemonic	Signal Name
1	RX+	Receive Data +
2	RX-	Receive Data -
3		Not Used
4	TX+	Transmit Data +
5	TX-	Transmit Data -
6		Not Used
7		Not Used
8		Not Used

A.2.1.6 6 Mbps J2 (Series C)

The following specifications apply to J2 network modules:

Description	Specification
Port Capacity	Four J2 ports per module
Data Rate	6.312 Mbps
Output Buffer	13,312 cell capacity
Media	Coaxial
Max. Line Length	~1300 ft
Connector	BNC
Line Encoding	B8ZS
Framing	Per ITU-T G.704
Clock Accuracy	±30 ppm
Timing	Primary and secondary 8kHz reference from internal (default) or network
Loopbacks	Line and Diagnostic loopbacks
Impedance	75 ohms nominal
Statistics/Alarms	Line Code Violations (LCV), framing bit errors (FER), CRC error events, Header Check Sequence (HCS) errors, cells received (RxCells), cells transmitted (TxCells), signal/clock detection, and AIS indication
Compliance	ATM Forum AF-PHY-0029.000, NTT Technical Reference of Cell Relay Interface v1, ITU-T G.703, G.704, G.804

A.2.1.7 34 Mbps E3 (Series C and Series D)

The following specifications apply to E3 network modules (NM-2/E3D and NM-4/E3D):

Description	Specification
Port Capacity	Two or four E3 ports per module
Data Rate	34.368 Mbps
Output Buffer	13,312 cell capacity - Series C 32,768 cell capacity - Series D
Media	Coaxial
Max. Line Length	~450 ft
Connector	BNC
Line Encoding	HDB3
Framing	Per ITU-T G.832 or G.751
Clock Accuracy	±20 ppm
Timing	Primary and secondary 8kHz reference from internal (default) or network
Loopbacks	Line, Payload, Diagnostic, and Cell loopbacks
Impedance	75 ohms nominal
Statistics/Alarms	Line code violations (LCV), framing bit errors (FER), P-bit and C-bit errors, header check sequence (HCS) errors, cells received (RxCells), cells transmitted (TxCells), signal/clock detection, code violations, bit errors, parity errors, and AIS indication
Compliance	ATM Forum AF-PHY-0034.000 R5, ITU-T G.703, G.751, G.832, G.804

A.2.1.8 155 Mbps STS-3c/STM-1 UTP (Series C and Series LC)

The following specifications apply to 155 Mbps UTP network modules (NM-4/155UTP5):

Description	Specification
Port Capacity	Four SONET/SDH ports per module
Data Rate	155.52 Mbps
Output Buffer	13,312 cell capacity - Series C 32,768 cell capacity - Series LC
Media	Category 5 Unshielded Twisted Pair (UTP)
Max. Line Length	~100 m
Connectors	RJ-45
Line Encoding	Non-Return to Zero (NRZ)
Framing	STS-3c/STM-1
Clock Accuracy	±20 ppm
Timing	Internal timing or per port network timing - Series C Primary and secondary 8KHz - Series LC
Loopbacks	Line and Diagnostic loopbacks
Statistics/Alarms	SONET/SDH statistics include Loss of Signal (LOS), Loss of Frame (LOF), Loss of Pointer (LOP), Far End Block Errors (FEBE), Alarm Indication Signal (AIS), Far End Receive Failure (FERF), Yellow Alarm, Bit Interleaved Parity errors (Line BIP-24, Section BIP-8, Path BIP-8), Header Check Sequence (HCS) errors
Compliance	ATM Forum STS-3c UNI v3.1, ITU-T I.432, ANSI T1E1.2/93-020, T1S1/92-185, ATM Forum AF-PHY-0015.000

A.2.1.8.1 155 Mbps UTP Pinout Specifications

155 Mbps UTP network modules have a standard RJ-45 female connector and use RJ-45 network equipment pinouts as illustrated in the table below:

Pin Number	Signal Mnemonic	Signal Name
1	RX+	Receive Data +
2	RX-	Receive Data -
3		Not Used
4		Not Used
5		Not Used
6		Not Used
7	TX+	Transmit Data +
8	TX-	Transmit Data -

A.2.1.8.2 Connecting Switches with 155 Mbps UTP Network Modules

When connecting switches using 155 Mbps UTP network modules, you need to use a category 5 UTP crossover cable with the following specifications:

- Pin 1 to pin 7 in both directions.
- Pin 2 to pin 8 in both directions.

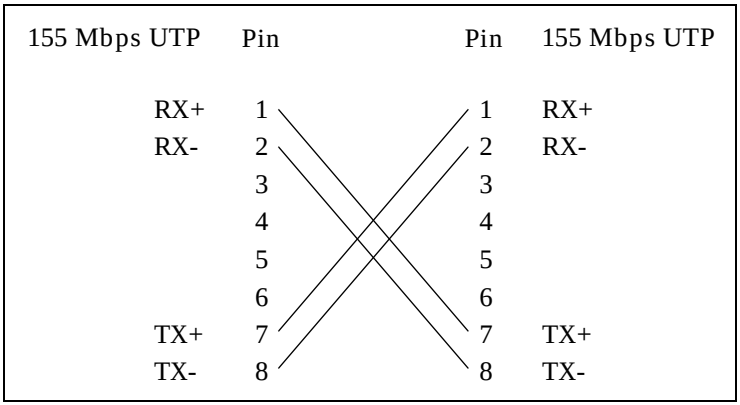

A.2.1.9 155 Mbps OC-3c/STM-1 MM (Series C, Series LC, and Series D)

The following specifications apply to 155 Mbps multimode network modules (NM-4/155MMSC and NM-4/155MMST):

Description	Specification
Port Capacity	Four SONET/SDH ports per module
Data Rate	155.52 Mbps
Output Buffer	13,312 cell capacity - Series C 32,768 cell capacity - Series D and Series LC
Media	Multimode fiber
Max. Line Length	~2 km
Connectors	ST - Series C and Series D SC - Series C, Series LC, and Series D
Line Encoding	Non-Return to Zero (NRZ)
Framing	STS-3c/STM-1
Clock Accuracy	±20 ppm
Timing	Internal timing or per port network timing
Loopbacks	Line and Diagnostic loopbacks - Series C and Series LC Line, Path, and Diagnostic loopbacks - Series D
Power	-14 to -20 dBm transmit, -14 to -30 dBm receive, 0 to 10 dB path attenuation
Core Diameter	62.5 µm
Fiber Diameter	125 µm
Wavelength	1,310 nm
Statistics/Alarms	SONET/SDH statistics include Loss of Signal (LOS), Loss of Frame (LOF), Loss of Pointer (LOP), Far End Block Errors (FEBE), Alarm Indication Signal (AIS), Far End Receive Failure (FERF), Yellow Alarm, Bit Interleaved Parity errors (Line BIP-24, Section BIP-8, Path BIP-8), Header Check Sequence (HCS) errors
Compliance	ATM Forum STS-3c UNI v3.1, ITU-T I.432, ANSI T1E1.2/93-020, T1S1/92-185, ITU-T G.957, GR-253-CORE

A.2.1.10 155 Mbps OC-3c/STM-1 SM (Series C, Series LC, and Series D)

The following specifications apply to 155 Mbps singlemode network modules (NM-4/155SMIR and NM-4/155SMLR):

Description	Specification
Port Capacity	Four SONET/SDH ports per module
Data Rate	155.52 Mbps
Output Buffer	13,312 cell capacity - Series C 32,768 cell capacity - Series LC and Series D
Media	Short or long reach single mode fiber - Series C Intermediate reach single mode fiber - Series LC Intermediate or long reach single mode fiber - Series D
Max. Line Length	~2 km (short reach); ~14 km (inter. reach); ~40 km (long reach)
Connectors	FC - Series C SC - Series LC and Series D
Line Encoding	Non-Return to Zero (NRZ)
Framing	STS-3c/STM-1
Clock Accuracy	±20 ppm
Timing	Primary and secondary 8kHz reference from internal (default) or network
Loopbacks	Line and Diagnostic loopbacks - Series C and Series LC Line, Diagnostic, and Path loopbacks - Series D
Power	Short Reach: -8 to -15 dBm transmit power, -8 to -23 dBm receive sensitivity, 0 to 8 dB path attenuation Intermediate Reach: -8 to -15 dBm transmit power, -8 to -28 dBm receive sensitivity, 0 to 13 dB path attenuation Long Reach: 0 to -5 dBm transmit power, -10 to -34 dBm receive sensitivity, 10 to 29 dB path attenuation
Core Diameter	10 µm
Fiber Diameter	125 µm
Wavelength	1,310 nm
Statistics/Alarms	SONET/SDH statistics include Loss of Signal (LOS), Loss of Frame (LOF), Loss of Pointer (LOP), Far End Block Errors (FEBE), Alarm Indication Signal (AIS), Far End Receive Failure (FERF), Yellow Alarm, Bit Interleaved Parity errors (Line BIP-24, Section BIP-8, Path BIP-8), Header Check Sequence errors (HCS)
Compliance	ATM Forum STS-3c UNI v3.1, ITU-T I.432, ANSI T1E1.2/93-020, T1S1/92-185, ITU-T G.957, GR-253-CORE

A.2.1.11 622 Mbps OC-12c/STM-4c MM (Series C, Series LC, and Series D)

The following specifications apply to 622 Mbps OC-12c multimode network modules (NM-1/622MMSC):

Description	Specification
Port Capacity	One SONET/SDH port per module
Data Rate	622.08 Mbps
Output Buffer	13,312 cell capacity - Series C 65,536 cell capacity - Series LC 32,768 cell capacity - Series D
Media	Multimode fiber
Max. Line Length	~500 m
Connectors	SC
Line encoding	Non-Return to Zero (NRZ)
Framing	STS-12c/STM-4c
Clock Accuracy	±20 ppm
Timing	Primary and secondary 8kHz reference from internal (default) or network
Loopbacks	Line and Path loopbacks - Series C Line, Path, and Diagnostic loopbacks - Series LC and Series D
Power	-20 to -14 dBm transmit power, -26 to -14 dBm receive sensitivity, 0 to 6 dB path attenuation for 62.5 µm fiber, 0 to 2 dB path attenuation for 50 µm fiber
Core Diameter	62.5 µm, 50 µm
Fiber Diameter	125 µm
Wavelength	1,270 - 1,380 nm
Statistics/Alarms	SONET/SDH statistics include Loss of Signal (LOS), Loss of Frame (LOF), Loss of Pointer (LOP), Far End Block Errors (FEBE), Alarm Indication Signal (AIS), Far End Receive Failure (FERF), Yellow Alarm, Bit Interleaved Parity (Line BIP-24, Section BIP-8, Path BIP-8) errors, Header Check Sequence (HCS) errors, cells received (RxCells), cells transmitted (TxCells)
Compliance	ATM Forum AF-PHY-0046.000, ITU-T I.432, ANSI T1E1.2/93-020, T1S1/92-185, ITU-T G.957, Bellcore TR-NWT-000253

A.2.1.12 622 Mbps OC-12c/STM-4c SM (Series C, Series LC, and Series D)

The following specifications apply to 622 Mbps single mode network modules (NM-1/622SMIR and NM-1/622SMLRD):

Description	Specification
Port Capacity	One SONET/SDH port per module
Data Rate	622.08 Mbps
Output Buffer	13,312 cell capacity - Series C 65,536 cell capacity - Series LC 32,768 cell capacity - Series D
Media	Single mode fiber
Max. Line Length	~15 km (intermediate reach); ~40km (long reach)
Connectors	FC - Series C SC - Series LC and Series D
Line Encoding	Non-Return to Zero (NRZ)
Framing	STS-12c/STM-4c
Clock Accuracy	±20 ppm
Timing	Primary and secondary 8kHz reference from internal (default) or network
Loopbacks	Line and Path loopbacks - Series C Line, Diagnostic, and Path loopbacks - Series LC and Series D
Power	Intermediate Reach: -8 to -15 dBm transmit power, -8 to -28 dBm receive sensitivity, 0 to 13 dB path attenuation Long Reach: -0 to -3 dBm transmit power, -8 to -28 dBm receive sensitivity, 8 to 25 dB path attenuation
Core Diameter	10 µm
Fiber Diameter	125 µm
Wavelength	1310 nm
Statistics/Alarms	SONET/SDH statistics include Loss of Signal (LOS), Loss of Frame (LOF), Loss of Pointer (LOP), Far End Block Errors (FEBE), Alarm Indication Signal (AIS), Far End Receive Failure (FERF), Yellow Alarm, Bit Interleaved Parity errors (Line BIP-24, Section BIP-8, Path BIP-8), Header Check Sequence errors (HCS), cells received (RxCells), cells transmitted (TxCells)
Compliance	AF-PHY-0046.000, ITU-T I.432, ANSI T1E1.2/93-020, T1S1/92-185, ITU-T G.957, GR-253-CORE

A.2.2 Mixed Mode Network Modules

This section details the specifications for the 155 Mbps mixed mode network modules which contain three SONET/SDH multimode ports (ports 1, 2, and 3) and one SONET/SDH single mode port (port 4) per module.

A.2.2.1 155 Mbps OC-3c/STM-1 3MM/1SM (Series C and Series D)

The following specifications apply to multimode ports 1, 2, and 3 on the Series C (NM-4/155LRSCD) and Series D (NM-4/155IR3MMD) network modules:

Description	Specification
Data Rate	155.52 Mbps
Output Buffer	13,312 cell capacity - Series C 32,768 cell capacity - Series D
Media	Multimode fiber
Max. Line Length	~2 km
Connectors	SC
Line Encoding	Non-Return to Zero (NRZ)
Framing	STS-3c/STM-1
Clock Accuracy	±20 ppm
Timing	Primary and secondary 8kHz reference from internal (default) or network
Loopbacks	Line and Diagnostic loopbacks - Series C Line, Diagnostic, and Path loopbacks - Series D
Power	-14 to -20 dBm transmit power, -14 to -30 dBm receive sensitivity, 0 to 10 dB path attenuation
Core Diameter	62.5 µm
Fiber Diameter	125 µm
Wavelength	1,310 nm
Statistics/Alarms	SONET/SDH statistics include Loss of Signal (LOS), Loss of Frame (LOF), Loss of Pointer (LOP), Far End Block Errors (FEBE), Alarm Indication Signal (AIS), Far End Receive Failure (FERF), Yellow Alarm, Bit Interleaved Parity errors (Line BIP-24, Section BIP-8, Path BIP-8), Header Check Sequence errors (HCS)
Compliance	ATM Forum STS-3c UNI v3.1, ITU-T I.432, ANSI T1E1.2/93-020, T1S1/92-185, ITU-T G.957, GR-253-CORE

The following specifications apply to singlemode port 4:

Description	Specification
Data Rate	155.52 Mbps
Output Buffer	13,312 cell capacity - Series C 32,768 cell capacity - Series D
Media	Short or long reach single mode fiber - Series C Intermediate or long reach single mode fiber - Series D
Max. Line Length	~2 km (short reach); ~14km (inter. reach); ~40km (long reach)
Connectors	FC - Series C SC - Series D
Line Encoding	Non-Return to Zero (NRZ)
Framing	STS-3c / STM-1
Clock Accuracy	±20 ppm
Timing	Primary and secondary 8kHz reference from internal (default) or network
Loopbacks	Line and Diagnostic loopbacks- Series C Line, Diagnostic, and Path loopbacks- Series D
Power	Short Reach: -8 to -15 dBm transmit power, -8 to -23 dBm receive sensitivity, 0 to 7 dB path attenuation Intermediate Reach: -8 to -15 dBm transmit power, -8 to -28 dBm receive sensitivity, 0 to 13 dB path attenuation Long Reach: 0 to -5 dBm transmit power, -10 to -34 dBm receive sensitivity, 10 to 29 dBm path attenuation
Core Diameter	10 µm
Fiber Diameter	125 µm
Wavelength	1,310 nm
Statistics/Alarms	SONET / SDH statistics include Loss of Signal (LOS), Loss of Frame (LOF), Loss of Pointer (LOP), Far End Block Errors (FEBE), Alarm Indication Signal (AIS), Far End Receive Failure (FERF), Yellow Alarm, Bit Interleaved Parity errors (Line BIP-24, Section BIP-8, Path BIP-8), Header Check Sequence errors (HCS)
Compliance	ATM Forum STS-3c UNI v3.1, ITU-T I.432, ANSI T1E1.2 / 93-020, T1S1 / 92-185, ITU-T G.957, GR-253-CORE

A.2.3 Circuit Emulation Service (CES) Network Modules

This section details the specifications for DS1 and E1 circuit emulation service network modules.

A.2.3.1 1.5 Mbps DS1 *VoicePlus*

The following specifications apply to DS1 CES network modules (NMCE-6DS1/A):

Description	Specification
Port Capacity	Six DS1 CES ports per module
Data Rate	1.544 Mbps
Max. Connections	127
Media	Unshielded Twisted Pair (UTP)
Max. Line Length	~655 ft
Connector	RJ-48c
Circuit Framing	**Structured Service:** Digital cross-connect emulation where Nx64 kbps and Nx56 kbps circuits are mapped to unique ATM Virtual Connections (VCs); N = 1 to 24 contiguous or non-contiguous Digital Signal Level Zero (DS0) channels per CESDS1 port **Unstructured Service:** Full bandwidth 1.544 Mbps clear channel service per CESDS1 port
Circuit Signalling	Channel Associated Signaling (CAS) and Basic modes supported with Structured Service
Line Encoding	B8ZS or AMI (user-configurable)
Framing	ESF or SF (user-configurable)
Clock Accuracy	±32 ppm
Timing	Primary and secondary 8kHz reference from internal (default) or network
Loopbacks	Line loopbacks
Impedance	100 ohms nominal
Statistics/Alarms	Line Code Violations (LCV), framing bit errors(FER), CRC-6 Bit Error Events (BEE), Out Of Frame events (OOF), Header Check Sequence (HCS) errors, cells received (RxCells), cells transmitted (TxCells), signal/clock detection, and AIS indication
Compliance	ATM Forum 94-0033R8, ANSI/Bellcore T1.102, T1.107, T1.408, TR-TSY-000009, ITU-T G.703, G.704, G.804, AF-VTOA-0078.000

A.2.3.1.1 DS1 Pinout Specifications

DS1 network modules have a standard RJ-45 female connector that uses RJ-48C CPE pinouts as illustrated in the table below:

Pin Number	Signal Mnemonic	Signal Name
1	RX+	Receive Data +
2	RX-	Receive Data -
3		Not Used
4	TX+	Transmit Data +
5	TX-	Transmit Data -
6		Not Used
7		Not Used
8		Not Used

A.2.3.2 2 Mbps E1 *VoicePlus*

The following specifications apply to E1 CES network modules (NMCE-6E1/A):

Description	Specification
Port Capacity	Six CESE1 ports per module
Data Rate	2.048 Mbps
Media	Unshielded Twisted Pair (UTP)
Max. Line Length	~655 ft
Connector	RJ-48c
Circuit Framing	**Structured Service:** Digital cross-connect emulation where Nx64 kbps and Nx56 kbps circuits are mapped to unique ATM Virtual Connections (VCs); N = 1 to 31 contiguous or non-contiguous Digital Signal Level Zero (DS0) channels per CESE1 port **Unstructured Service:** Full bandwidth 2.048 Mbps clear channel service per CESE1 port
Circuit Signalling	Channel Associated Signaling (CAS) and Basic modes supported with Structured Service
Line Encoding	HDB3
Framing	CRC-4, Multiframe, CRC-4 Multiframe
Clock Accuracy	±32 ppm
Timing	Primary and secondary 8kHz reference from internal (default) or network
Loopbacks	Per-port line/payload loopback
Impedance	120 ohms nominal
Statistics/Alarms	Line Code Violations (LCV), framing bit errors (FER), Far End Block Errors (FEBE), CRC error events, Header Check Sequence (HCS) errors, cells received (RxCells), cells transmitted (TxCells), signal/clock detection, and AIS indication
Compliance	ATM Forum Circuit Emulation Service Interoperability Specification v2.0 (ATM Forum/95-1504R1), ANSI/Bellcore T1.403, ITU-T G.703, G.704, G.823, G.824, AF-VTOA-0078.000

A.2.3.2.1 E1 Pinout Specifications

E1 network modules have a standard RJ-45 female connector that uses RJ-48C CPE pinouts as illustrated in the table below:

Pin Number	Signal Mnemonic	Signal Name
1	RX+	Receive Data +
2	RX-	Receive Data -
3		Not Used
4	TX+	Transmit Data +
5	TX-	Transmit Data -
6		Not Used
7		Not Used
8		Not Used

A.2.4 Frame Relay and FUNI Interworking Network Modules

This section details the specifications that apply to DS1 and E1 FramePlus network modules which can be configured for Frame Relay or ATM FUNI applications.

A.2.4.1 1.5 Mbps DS1 *FramePlus*

The following specifications apply to DS1 FramePlus network modules (NMFR-4/DS1A):

Description	Specification
Port Capacity	four DS1 ports per network module
Data Rate	1.544 Mbps
Max. Connections	253
Media	Unshielded Twisted Pair (UTP)
Max. Line Length	~656 ft. (200m)
Connector	RJ-48c
Frame Relay Channel Services	**Unchannelized Operation:** Full line rate 1.536 Mbps **Channelized Operation:** Fractional service N x 64 Kbps or Mx (N x 64 Kbps) where N<=24 (Contiguous or Non-contiguous assignment of 64 Kbps time slots)
FUNI Channel Services	**Structured Service:** Fractional N X 64 Kbps or Mx (N x 64 Kbps) where N<=24 up to full line rate 1.536 Mbps (Contiguous or Non-contiguous assignment of 64 Kbps time slots)
Line Encoding	B8ZS or AMI (user-configurable)
Framing	ESF (Extended Superframe)
Clock Accuracy	On-board crystal equivalent to Stratum 4 source (±25 ppm)
Timing	Primary and secondary 8kHz reference primary reference sources derived from onboard crystal, loop, or switch fabric
Loopbacks	Local Line Loopback, Remote Line Loopback, Diagnostic Loopback
Impedance	100 ohms nominal
Statistics/Alarms	Loss of Frame (LOF), Loss of Signal (LOS), Alarm Indication Signal (AIS), Out of Frame (OOF), Remote Defect Indication (RDI)

Description	Specification
Standards Compliance	FRF.8: Frame Relay/ATM PVC Service Interworking Implementation Agreement, FRF.1.1: Frame Relay User-to-Network Implementation Agreement, FRF.3: Multi-protocol Encapsulation Over Frame Relaying Networks Implementation Agreement, ATMF AF-SAA-0088.000: Frame Based User-to-Network Interface (FUNI) Specification v2.0 - Mode 1a, ATMF B-ICI Specification Document v1.1, ATMF DS1 Physical/electrical characteristics of hierarchical digital interfaces, ANSI T1.606, ANSI T1.606a, ANSI T1.617 Annex D, ANSI T1.717a, ANSI T1.618, ANSI T1.633, ANSI T1.403, ITU-T I.233.1, ITU-T I.365.1, ITU-T I.370, ITU-T I.555, ITU-T I.610, ITU-T I.610, ITU-T, Q.933 Annex A, ITU-T I.363, ITU-T G.703, ITU-T G.704, ITU-T G.706, ITU-T G.709, ITU-T, G.732, ITU-T G.733

A.2.4.1.1 DS1 Pinout Specifications

DS1 network modules have a standard RJ-45 female connector that uses RJ-48C CPE pinouts as illustrated in the table below:

Pin Number	Signal Mnemonic	Signal Name
1	RX+	Receive Data +
2	RX-	Receive Data -
3		Not Used
4	TX+	Transmit Data +
5	TX-	Transmit Data -
6		Not Used
7		Not Used
8		Not Used

A.2.4.2 2 Mbps E1 *FramePlus*

The following specifications apply to E1 FramePlus network modules (NMFR-4/E1A):

Description	Specification
Port Capacity	four E1 ports per module
Data Rate	2.048 Mbps
Media	Unshielded Twisted Pair (UTP)
Max. Line Length	~656 ft (200m)
Connector	RJ-48c
Frame Relay Channel Services	**Unchannelized Operation:** Full channel 1.984 Mbps **Channelized Operation:** Fractional Service N x 64 Kbps, Mx (N x 64 Kbps) service where N<=31 (Contiguous or non-contiguous assignment of 64 Kbps time slots)
FUNI Channel Services	**Structured Service:** Fractional N x 64 Kbps or Mx (N x 64 Kbps) where N<=31 up to full line rate 1.984 Mbps (Contiguous or non-contiguous assignment of 64 Kbps time slots)
Line Encoding	HDB3
Framing	ESF
Clock Accuracy	On-board crystal equivalent to Stratum 4 source (±25 ppm or better)
Timing	Primary and secondary 8kHz reference primary reference sources derived from onboard crystal, loop, or switch fabric
Loopbacks	Local line, remote line, diagnostic loopbacks
Impedance	120 ohms nominal
Statistics/Alarms	Loss of Frame (LOF), Loss of Signal (LOS), Alarm Indication Signal (AIS), Out of Frame (OOF), Remote Defect Indication (RDI)
Standards Compliance	FRF.8: Frame Relay/ATM PVC Service Interworking Implementation Agreement, FRF.1.1: Frame Relay User-to-Network Implementation Agreement, FRF.3: Multi-protocol Encapsulation Over Frame Relaying Networks Implementation Agreement, ATMF AF-SAA-0088.000: Frame Based User-to-Network Interface (FUNI) Specification v2.0 - Mode 1a, ATMF B-ICI Specification Document v1.1, ATMF DS1 Physical/electrical characteristics of hierarchical digital interfaces, ANSI T1.606, ANSI T1.606a, ANSI T1.617 Annex D, ANSI T1.717a, ANSI T1.618, ANSI T1.633, ANSI T1.403, ITU-T I.233.1, ITU-T I.365.1, ITU-T I.370, ITU-T I.555, ITU-T I.610, ITU-T I.610, ITU-T, Q.933 Annex A, ITU-T I.363, ITU-T G.703, ITU-T G.704, ITU-T G.706, ITU-T G.709, ITU-T, G.732, ITU-T G.733

A.2.4.2.1 E1 Pinout Specifications

E1 network modules have a standard RJ-45 female connector that uses RJ-48C CPE pinouts as illustrated in the table below:

Pin Number	Signal Mnemonic	Signal Name
1	RX+	Receive Data +
2	RX-	Receive Data -
3		Not Used
4	TX+	Transmit Data +
5	TX-	Transmit Data -
6		Not Used
7		Not Used
8		Not Used

Acronyms

The networking terms in the following list are defined in the Glossary of this manual. Glossary items are listed alphabetically according to the full term.

AAL	ATM Adaptation Layer
ABR	Available Bit Rate
ACM	Address Complete Message
ACR	Allowable Cell Rate
ADPCM	Adaptive Differential Pulse Code Modulation
AHFG	ATM-attached Host Functional Group
AIMUX	ATM Inverse Multiplexing
AIS	Alarm Indication Signal
AMI	Alternate Mark Inversion
AMI	ATM Management Interface
ANSI	American National Standards Institute
APCM	Adaptive Pulse Code Modulation
API	Application Program Interface
APP	Application Program
APS	Automatic Protection Switching
ARP	Address Resolution Protocol
ASCII	American Standard Code for Information Interchange
ATDM	Asynchronous Time Division Multiplexing
ATM	Asynchronous Transfer Mode
AUI	Attachment User Interface
B8ZS	Bipolar 8 Zero Substitution
BCOB	Broadband Connection Oriented Bearer
BCOB-A	Bearer Class A
BCOB-C	Bearer Class C
BCOB-X	Bearer Class X
BECN	Backward Explicit Congestion Notification
BER	Bit Error Rate
BES	Bursty Errored Seconds
BGP	Border Gateway Protocol
B-ICI	B-ISDN Inter-Carrier Interface.
BIP	Bit Interleaved Parity
B-ISDN	Broadband Integrated Services Digital Network
B-ISUP	Broadband ISDN User's Part

BITS	Building Integrated Timing Supply
BNC	Bayonet-Neill-Concelman
BPDU	Bridge Protocol Data Unit
bps	Bits per Second
BPV	Bipolar Violation
B-TE	Broadband Terminal Equipment
BUS	Broadcast and Unknown Server
CAC	Connection Admission Control
CAS	Channel Associated Signaling
CBDS	Connectionless Broadband Data Service
CBR	Constant Bit Rate
CCITT	International Telephone and Telegraph Consultative Committee
CCS	Common Channel Signaling
CDV	Cell Delay Variation
CE	Connection Endpoint
CEI	Connection Endpoint Identifier
CES	Circuit Emulation Service
CGA	Carrier Group Alarm
CIP	Carrier Identification Parameter
CIR	Committed Information Rate
CLIP	Classical IP
CLP	Cell Loss Priority
CLR	Cell Loss Ratio-1-15
CLS	Connectionless service
CMIP	Common Management Interface Protocol
CMR	Cell Misinsertion Rate
CPE	Customer Premise Equipment
CRA	Cell Rate Adaptation
CRC	Cyclic Redundancy Check
CRS	Cell Relay Service
CS	Controlled Slip, **or** Convergence Sublayer
CSU	Channel Service Unit
CTD	Cell Transfer Delay
CTS	Clear To Send
DACS	Digital Access and Cross-Connect System
DARPA	Defense Advanced Research Projects Agency
DCC	Data Country Code
DCE	Data Communications Equipment
DCS	Digital Cross-connect System
DES	Destination End Station
DFA	DXI Frame Address
DLCI	Data Link Connection Identifier

DNS	Domain Naming System
DSn	Digital Standard n (n=0, 1, 1C, 2, and 3)
DSR	Data Set Ready
DTE	Data Terminal Equipment
DTR	Data Terminal Ready
EEPROM	Electrically Erasable Programmable Read Only Memory
EFCI	Explicit Forward Congestion Indication
EGP	Exterior Gateway Protocol
EIA	Electronics Industries Association
EISA	Extended Industry Standard Architecture
ELAN	Emulated Local Area Network
EMI	Electromagnetic Interference
EPROM	Erasable Programmable Read Only Memory
EQL	Equalization
ER	Explicit Rate
ES	End System, **or** Errored Second
ESF	Extended Super Frame
ESI	End System Identifier
EXZ	Excessive Zeroes (Error Event)
FC	Face Contact
FCC	Federal Communications Commission
FCS	Frame Check Sequence
FDDI	Fiber Distributed Data Interface
FDM	Frequency Division Multiplexing
FEBE	Far End Block Error
FEC	Forward Error Correction
FECN	Forward Explicit Congestion Notification
FERF	Far End Receive Failure
FIFO	First-In, First-Out
FRS	Frame-Relay Service
FTP	File Transfer Protocol
FT-PNNI	*ForeThought* PNNI
FUNI	Frame-Based UNI
GCAC	Generic Connection Admission Control
GCRA	Generic Cell Rate Algorithm
GFC	Generic Flow Control
HDB3	High Density Bipolar
HDLC	High Level Data Link Control
HEC	Header Error Control
HIPPI	High Performance Parallel Interface
HSSI	High-Speed Serial Interface
ICMP	Internet Control Message Protocol

IDU	Interface Data Unit
IEEE	Institute of Electrical and Electronics Engineers
IETF	Internet Engineering Task Force
ILMI	Interim Local Management Interface
IP	Internet Protocol
IPX	Internetwork Packet Exchange
IS	Intermediate system
ISDN	Integrated Services Digital Network
ISO	International Standards Organization
ITU-T	International Telecommunication Union Telecommunication
IWF	Interworking Function
IXC	Interexchange Carriers
JPEG	Joint Photographic Experts Group
Kbps	Kilobits per second
LAN	Local Area Network
LANE	LAN Emulation
LAPB	Link Access Procedure, Balanced
LATA	Local Access and Transport Area
LBO	Line Build Out
LCV	Line Code Violations
LE_ARP	LAN Emulation Address Resolution Protocol
LEC	LAN Emulation Client
LECS	LAN Emulation Configuration Server
LES	LAN Emulation Server
LLC	Logical Link Control
LOF	Loss Of Frame
LOP	Loss Of Pointer
LOS	Loss Of Signal
LSB	Least Significant Bit
MAC	Media Access Control
MAN	Metropolitan Area Network
MAU	Media Attachment Unit
MBS	Maximum Burst Size
MCDV	Maximum Cell Delay Variance
MCLR	Maximum Cell Loss Ratio
MCR	Minimum Cell Rate
MCTD	Maximum Cell Transfer Delay
MIB	Management Information Base
MIC	Media Interface Connector
MID	Message Identifier
MMF	Multimode Fiber Optic Cable
MPEG	Motion Picture Experts Group
MPOA	Multiprotocol over ATM

MSB	Most Significant Bit
MTU	Maximum Transmission Unit
NM	Network Management Entity
NML	Network Management Layer
NMS	Network Management Station
NNI	Network-to-Network Interface or Network Node Interface
NPC	Network Parameter Control
NRZ	Non Return to Zero
NRZI	Non Return to Zero Inverted
NSAP	Network Service Access Point
NTSC	National TV Standards Committee
OAM	Operation and Maintenance Cell
OC-n	Optical Carrier level-n
OID	Object Identifier
OOF	Out-of-Frame
OSI	Open Systems Interconnection
OSPF	Open Shortest Path First Protocol
OUI	Organizationally Unique Identifier
PAD	Packet Assembler Disassembler
PAL	Phase Alternate Line
PBX	Private Branch Exchange
PCI	Peripheral Component Interconnect
PCM	Pulse Code Modulation
PCR	Peak Cell Rate
PDN	Public Data Network
PDU	Protocol Data Unit
PHY	Physical Layer
ping	Packet Internet Groper
PLCP	Physical Layer Convergence Protocol
PLP	Packet Level Protocol
PM	Physical Medium
PMD	Physical Medium Dependent
PNNI	Private Network Node Interface or Private Network-to-Network Interface
PPP	Point-to-Point Protocol
PROM	Programmable Read-Only Memory
PRS	Primary Reference Source
PSN	Packet Switched Network
PT	Payload Type
PVC	Permanent Virtual Circuit (or Channel)
PVCC	Permanent Virtual Channel Connection
PVPC	Permanent Virtual Path Connection
QD	Queuing Delay
QoS	Quality of Service

RD	Routing Domain
RFCs	Requests For Comment
RFI	Radio Frequency Interference
RIP	Routing Information Protocol
RISC	Reduced Instruction Set Computer
RTS	Request To Send
SA	Source Address
SA	Source MAC Address
SAP	Service Access Point
SAR	Segmentation And Reassembly
SC	Structured Cabling, **or** Structured Connectors, **or** Stick and Click
SCR	Sustainable Cell Rate
SCSI	Small Computer Systems Interface
SDLC	Synchronous Data Link Control
SDU	Service Data Unit
SEAL	Simple and Efficient Adaptation Layer
SECAM	Systeme En Coleur Avec Memoire
SEL	Selector
SES	Severely Errored Seconds
SF	Super Frame
SGMP	Simple Gateway Management Protocol
SIR	Sustained Information Rate
SLIP	Serial Line IP
SMDS	Switched Multimegabit Data Service
SMF	Single Mode Fiber
SMTP	Simple Mail Transfer Protocol
SNA	Systems Network Architecture
SNAP	SubNetwork Access Protocol
SNI	Subscriber Network Interface
SNMP	Simple Network Management Protocol
SONET	Synchronous Optical Network
SPANS	Simple Protocol for ATM Network Signalling
SPARC	Scalable Processor Architecture Reduced instruction set Computer
SPE	Synchronous Payload Envelope
SPVC	Smart PVC
SS7	Signaling System No. 7
SSCOP	Service Specific Connection Oriented Protocol
SSCS	Service Specific Convergence Sublayer
ST	Straight Tip, **or** Stick and Turn
STM	Synchronous Transfer Mode

STP	Shielded Twisted Pair, Spanning Tree Protocol
STS	Synchronous Transport Signal
SVC	Switched Virtual Circuit (or Channel)
SVCC	Switched Virtual Channel Connection
SVPC	Switched Virtual Path Connection
TAXI	Transparent Asynchronous Transmitter / Receiver Interface
TC	Transmission Convergence
TCP	Transmission Control Protocol
TCP/IP	Transmission Control Protocol / Internet Protocol
TCR	Tagged Cell Rate
TCS	Transmission Convergence Sublayer
TDM	Time Division Multiplexing
TE	Terminal Equipment
TFTP	Trivial File Transfer Protocol
TM	Traffic Management
UAS	Unavailable Seconds
UBR	Unspecified Bit Rate
UDP	User Datagram Protocol
UNI	User-to-Network Interface
UPC	Usage Parameter Control
UTOPIA	Universal Test & Operations Interface for ATM
UTP	Unshielded Twisted Pair
VBR	Variable Bit Rate
VC	Virtual Channel (or Circuit)
VCC	Virtual Channel Connection
VCI	Virtual Channel Identifier
VCL	Virtual Channel Link
VINES	Virtual Network Software
VLAN	Virtual Local Area Network
VP	Virtual Path
VPC	Virtual Path Connection
VPDN	Virtual Private Data Network
VPI	Virtual Path Identifier
VPL	Virtual Path Link
VPN	Virtual Private Network
VPT	Virtual Path Terminator
VS/VD	Virtual Source / Virtual Destination
VT	Virtual Tributary
WAN	Wide-Area Network
ZBTSI	Zero Byte Time Slot Interchange

Glossary

10Base-T - a 10 Mbps baseband Ethernet specification utilizing twisted-pair cabling (Category 3, 4, or 5). 10BaseT, which is part of the IEEE 802.3 specification, has a distance limit of approximately 100 meters per segment.

802.1d Spanning Tree Bridging - the IEEE standard for bridging; a MAC layer standard for transparently connecting two or more LANs (often called subnetworks) that are running the same protocols and cabling. This arrangement creates an extended network, in which any two workstations on the linked LANs can share data.

802.3 Ethernet - the IEEE standard for Ethernet; a physical-layer standard that uses the CSMA / CD access method on a bus-topology LAN.

802.5 Token Ring - the IEEE physical-layer standard that uses the token-passing access method on a ring-topology LAN.

AAL Connection - an association established by the AAL between two or more next higher layer entities.

Adapter - A fitting that supplies a passage between two sets of equipment when they cannot be directly interconnected.

Adaptive Differential Pulse Code Modulation (ADPCM) - A technique that allows analog voice signals to be carried on a 32K bps digital channel. Sampling is done at 8Hz with 4 bits used to describe the difference between adjacent samples.

Adaptive Pulse Code Modulation (APCM) - A technique that effectively reduces occupied bandwidth per active speaker by reducing sampling rates during periods of overflow peak traffic.

Address - A unique identity of each network station on a LAN or WAN.

Address Complete Message (ACM) - A B-ISUP call control message from the receiving exchange to sending exchange indicating the completion of address information.

Address Mask - a bit mask used to identify which bits in an address (usually an IP address) are network significant, subnet significant, and host significant portions of the complete address. This mask is also known as the subnet mask because the subnetwork portion of the address can be determined by comparing the binary version of the mask to an IP address in that subnet. The mask holds the same number of bits as the protocol address it references.

Address Prefix - A string of 0 or more bits up to a maximum of 152 bits that is the lead portion of one or more ATM addresses.

Address Resolution - The procedure by which a client associates a LAN destination with the ATM address of another client or the BUS.

Address Resolution Protocol (ARP) - a method used to resolve higher level protocol addressing (such as IP) into the appropriate header data required for ATM; i.e., port, VPI, and VCI; also defines the AAL type to be used.

Agent - a component of network- and desktop-management software, such as SNMP, that gathers information from MIBs.

alarm - an unsolicited message from a device, typically indicating a problem with the system that requires attention.

Alarm Indication Signal (AIS) - In T1, an all ones condition used to alert a receiver that its incoming signal (or frame) has been lost. The loss of signal or frame is detected at the receiving end, and the failed signal is replaced by all the ones condition which the receiver interprets as an AIS. The normal response to this is AIS is for the receiving end to generate a yellow alarm signal as part of its transmission towards the faulty end. (The AIS itself is sometimes called a Blue Signal).

A-Law - The PCM coding and companding standard used in Europe.

Allowable Cell Rate (ACR) - parameter defined by the ATM Forum for ATM traffic management. ACR varies between the MCR and the PCR, and is dynamically controlled using congestion control mechanisms.

Alternate Mark Inversion (AMI) - A line coding format used on T1 facilities that transmits ones by alternate positive and negative pulses.

Alternate Routing - A mechanism that supports the use of a new path after an attempt to set up a connection along a previously selected path fails.

American National Standards Institute (ANSI) - a private organization that coordinates the setting and approval of some U.S. standards. It also represents the United States to the International Standards Organization.

American Standard Code for Information Interchange (ASCII) - a standard character set that (typically) assigns a 7-bit sequence to each letter, number, and selected control characters.

AppleTalk - a networking protocol developed by Apple Computer for communication between Apple's products and other computers. Independent of the network layer, AppleTalk runs on LocalTalk, EtherTalk and TokenTalk.

Application Layer - Layer seven of the ISO reference model; provides the end-user interface.

Application Program (APP) - a complete, self-contained program that performs a specific function directly for the user.

Application Program Interface (API) - a language format that defines how a program can be made to interact with another program, service, or other software; it allows users to develop custom interfaces with FORE products.

Assigned Cell - a cell that provides a service to an upper layer entity or ATM Layer Management entity (ATMM-entity).

asxmon - a FORE program that repeatedly displays the state of the switch and its active ports.

Asynchronous Time Division Multiplexing (ATDM) - a multiplexing technique in which a transmission capability is organized into a priori, unassigned time slots. The time slots are assigned to cells upon request of each application's instantaneous real need.

Asynchronous Transfer Mode (ATM) - a transfer mode in which the information is organized into cells. It is asynchronous in the sense that the recurrence of cells containing information from an individual user is not necessarily periodic.

ATM Adaptation Layer (AAL) - the AAL divides user information into segments suitable for packaging into a series of ATM cells. AAL layer types are used as follows:

AAL-1 - constant bit rate, time-dependent traffic such as voice and video
AAL-2 - still undefined; a placeholder for variable bit rate video transmission
AAL-3/4 - variable bit rate, delay-tolerant data traffic requiring some sequencing and/or error detection support (originally two AAL types, connection-oriented and connectionless, which have been combined)
AAL-5 - variable bit rate, delay-tolerant, connection-oriented data traffic requiring minimal sequencing or error detection support

ATM Address - Defined in the UNI Specification as 3 formats, each having 20 bytes in length.

ATM Forum - an international non-profit organization formed with the objective of accelerating the use of ATM products and services through a rapid convergence of interoperability specifications. In addition, the Forum promotes industry cooperation and awareness.

ATM Inverse Multiplexing (AIMUX) - A device that allows multiple T1 or E1 communications facilities to be combined into a single broadband facility for the transmission of ATM cells.

ATM Layer link - a section of an ATM Layer connection between two adjacent active ATM Layer entities (ATM-entities).

ATM Link - a virtual path link (VPL) or a virtual channel link (VCL).

ATM Management Interface (AMI) - the user interface to FORE Systems' *ForeThought* switch control software (SCS). AMI lets users monitor and change various operating configurations of FORE Systems switches and network module hardware and software, IP connectivity, and SNMP network management.

ATM Peer-to-Peer Connection - a virtual channel connection (VCC) or a virtual path connection (VPC) directly established, such as workstation-to-workstation. This setup is not commonly used in networks.

ATM Traffic Descriptor - a generic list of parameters that can be used to capture the intrinsic traffic characteristics of a requested ATM connection.

ATM User-to-User Connection - an association established by the ATM Layer to support communication between two or more ATM service users (i.e., between two or more next higher layer entities or between two or more ATM entities). The communication over an ATM Layer connection may be either bidirectional or unidirectional. The same Virtual Channel Identifier (VCI) is used for both directions of a connection at an interface.

atmarp - a FORE program that shows and manipulates ATM ARP entries maintained by the given device driver. This is also used to establish PVC connections.

ATM-attached Host Functional Group (AHFG) - The group of functions performed by an ATM-attached host that is participating in the MPOA service.

atmconfig - a FORE program used to enable or disable SPANS signaling.

atmstat - a FORE program that shows statistics gathered about a given adapter card by the device driver. These statistics include ATM layer and ATM adaptation layer cell and error counts. This can also be used to query other hosts via SNMP.

Attachment User Interface (AUI) - IEEE 802.3 interface between a media attachment unit (MAU) and a network interface card (NIC). The term AUI can also refer to the rear panel port to which an AUI cable might attach.

Auto-logout - a feature that automatically logs out a user if there has been no user interface activity for a specified length of time.

Automatic Protection Switching (APS) - Equipment installed in communications systems to detect circuit failures and automatically switch to redundant, standby equipment.

Available Bit Rate (ABR) - a type of traffic for which the ATM network attempts to meet that traffic's bandwidth requirements. It does not guarantee a specific amount of bandwidth and the end station must retransmit any information that did not reach the far end.

Backbone - the main connectivity device of a distributed system. All systems that have connectivity to the backbone connect to each other, but systems can set up private arrangements with each other to bypass the backbone to improve cost, performance, or security.

Backplane - High-speed communications line to which individual components are connected.

Backward Explicit Congestion Notification (BECN) - A Resource Management cell type generated by the network or the destination, indicating congestion or approaching congestion for traffic flowing in the direction opposite that of the BECN cell.

Bandwidth - usually identifies the capacity or amount of data that can be sent through a given circuit; may be user-specified in a PVC.

Baud - unit of signalling speed, equal to the number of discrete conditions or signal events per second. If each signal event represents only one bit, the baud rate is the same as bps; if each signal event represents more than one bit (such as a dibit), the baud rate is smaller than bps.

Bayonet-Neill-Concelman (BNC) - a bayonet-locking connector used to terminate coaxial cables. BNC is also referred to as Bayonet Network Connector.

Bipolar 8 Zero Substitution (B8ZS) - a technique used to satisfy the ones density requirements of digital T-carrier facilities in the public network while allowing 64 Kbps clear channel data. Strings of eight consecutive zeroes are replaced by an eight-bit code representing two intentional bipolar pulse code violations (000V10V1).

Bipolar Violation (BPV) - an error event on a line in which the normal pattern of alternating high (one) and low (zero) signals is disrupted. A bipolar violation is noted when two high signals occur without an intervening low signal, or vice versa.

B-ISDN Inter-Carrier Interface (B-ICI) - An ATM Forum defined specification for the interface between public ATM networks to support user services across multiple public carriers.

Bit Error Rate (BER) - A measure of transmission quality, generally shown as a negative exponent, (e.g., 10^{-7} which means 1 out of 10^{7} bits [1 out of 10,000,000 bits] are in error).

Bit Interleaved Parity (BIP) - an error-detection technique in which character bit patterns are forced into parity, so that the total number of one bits is always odd or always even. This is accomplished by the addition of a one or zero bit to each byte, as the byte is transmitted; at the other end of the transmission, the receiving device verifies the parity (odd or even) and the accuracy of the transmission.

Bit Robbing - The use of the least significant bit per channel in every sixth frame for signaling.

Bit Stuffing - A process in bit-oriented protocols where a zero is inserted into a string of ones by the sender to prevent the receiver from interpreting valid user data (the string of ones) as control characters (a Flag character for instance).

Border Gateway Protocol (BGP) - used by gateways in an internet connecting autonomous networks. It is derived from experiences learned using the EGP.

bps - bits per second

Bridge - a device that expands a Local Area Network by forwarding frames between data link layers associated with two separate cables, usually carrying a common protocol. Bridges can usually be made to filter certain packets (to forward only certain traffic).

Bridge Protocol Data Unit (BPDU) - A message type used by bridges to exchange management and control information.

Broadband - a service or system requiring transmission channels capable of supporting rates greater than the Integrated Services Digital Network (ISDN) primary rate.

Broadband Access - an ISDN access capable of supporting one or more broadband services.

Broadband Connection Oriented Bearer (BCOB) - Information in the SETUP message that indicates the type of service requested by the calling user.

BCOB-A (Bearer Class A) - Indicated by ATM end user in SETUP message for connection-oriented, constant bit rate service. The network may perform internetworking based on AAL information element (IE).

BCOB-C (Bearer Class C) - Indicated by ATM end user in SETUP message for connection-oriented, variable bit rate service. The network may perform internetworking based on AAL information element (IE).

BCOB-X (Bearer Class X) - Indicated by ATM end user in SETUP message for ATM transport service where AAL, traffic type and timing requirements are transparent to the network.

Broadband Integrated Services Digital Network (B-ISDN) - a common digital network suitable for voice, video, and high-speed data services running at rates beginning at 155 Mbps.

Broadband ISDN User's Part (B-ISUP) - A protocol used to establish, maintain and release broadband switched network connections across an SS7 / ATM network.

Broadband Terminal Equipment (B-TE) - An equipment category for B-ISDN which includes terminal adapters and terminals.

Broadcast - Data transmission to all addresses or functions.

Broadcast and Unknown Server (BUS) - in an emulated LAN, the BUS is responsible for accepting broadcast, multicast, and unknown unicast packets from the LECs to the broadcast MAC address (FFFFFFFFFFFF) via dedicated point-to-point connections, and forwarding the packets to all of the members of the ELAN using a single point-to-multipoint connection.

Brouter (bridging/router) - a device that routes some protocols and bridges others based on configuration information.

Buffer - A data storage medium used to compensate of a difference in rate of data flow or time of occurrence of events when transmitting data from one device to another.

Building Integrated Timing Supply (BITS) - a master timing supply for an entire building, which is a master clock and its ancillary equipment. The BITS supplies DS1 and / or composite clock timing references for synchronization to all other clocks and timing sources in that building.

Bursty Errored Seconds (BES) - a BES contains more than 1 and fewer than 320 path coding violation error events, and no severely errored frame or AIS defects. Controlled slips are not included in determining BESs.

Bursty Second - a second during which there were at least the set number of BES threshold event errors but fewer than the set number of SES threshold event errors.

Byte - A computer-readable group of bits (normally 8 bits in length).

Call - an association between two or more users or between a user and a network entity that is established by the use of network capabilities. This association may have zero or more connections.

Carrier - a company, such as any of the "baby Bell" companies, that provide network communications services, either within a local area or between local areas.

Carrier Group Alarm (CGA) - A service alarm generated by a channel bank when an out-of-frame (OOF) condition exists for some predetermined length of time (generally 300 milliseconds to 2.5 seconds). The alarm causes the calls using a trunk to be dropped and trunk conditioning to be applied.

Carrier Identification Parameter (CIP) - A 3 or 4 digit code in the initial address message identifying the carrier to be used for the connection.

cchan - a FORE program that manages virtual channels on a TNX switch running `asxd`.

Cell - an ATM Layer protocol data unit (PDU). The basic unit of information transported in ATM technology, each 53-byte cell contains a 5-byte header and a 48-byte payload.

Cell Delay Variation (CDV) - a quantification of cell clumping for a connection. The cell clumping CDV (yk) is defined as the difference between a cell's expected reference arrival time (ck) and its actual arrival time (ak). The expected reference arrival time (ck) of cell k of a specific connection is max. T is the reciprocal of the negotiated peak cell rate.

Cell Delineation - the protocol for recognizing the beginning and end of ATM cells within the raw serial bit stream.

Cell Header - ATM Layer protocol control information.

Cell Loss Priority (CLP) - the last bit of byte four in an ATM cell header; indicates the eligibility of the cell for discard by the network under congested conditions. If the bit is set to 1, the cell may be discarded by the network depending on traffic conditions.

Cell Loss Ratio - In a network, cell loss ratio is (1-x/y), where y is the number of cells that arrive in an interval at an ingress of the network; and x is the number of these y cells that leave at the egress of the network element.

Cell Loss Ratio (CLR) - CLR is a negotiated QoS parameter and acceptable values are network specific. The objective is to minimize CLR provided the end-system adapts the traffic to the changing ATM layer transfer characteristics. The Cell Loss Ratio is defined for a connection as: Lost Cells/Total Transmitted Cells. The CLR parameter is the value of CLR that the network agrees to offer as an objective over the lifetime of the connection. It is expressed as an order of magnitude, having a range of 10-1 to 10-15 and unspecified.

Cell Misinsertion Rate (CMR) - the ratio of cells received at an endpoint that were not originally transmitted by the source end in relation to the total number of cells properly transmitted.

Cell Rate Adaptation (CRA) - a function performed by a protocol module in which empty cells (known as unassigned cells) are added to the output stream. This is because there always must be a fixed number of cells in the output direction; when there are not enough cells to transmit, unassigned cells are added to the output data stream.

Cell Relay Service (CRS) - a carrier service which supports the receipt and transmission of ATM cells between end users in compliance with ATM standards and implementation specifications.

Cell Transfer Delay - the transit delay of an ATM cell successfully passed between two designated boundaries. See CTD.

Cell Transfer Delay (CTD) - This is defined as the elapsed time between a cell exit event at the measurement point 1 (e.g., at the source UNI) and the corresponding cell entry event at the measurement point 2 (e.g., the destination UNI) for a particular connection. The cell transfer delay between two measurement points is the sum of the total inter-ATM node transmission delay and the total ATM node processing delay.

Channel - A path or circuit along which information flows.

Channel Associated Signaling (CAS) - a form of circuit state signaling in which the circuit state is indicated by one or more bits of signaling status sent repetitively and associated with that specific circuit.

Channel Bank - A device that multiplexes many slow speed voice or data conversations onto high speed link and controls the flow.

Channel Service Unit (CSU) - An interface for digital leased lines which performs loopback testing and line conditioning.

Channelization - capability of transmitting independent signals together over a cable while still maintaining their separate identity for later separation.

Circuit - A communications link between points.

Circuit Emulation Service (CES) - The ATM Forum circuit emulation service interoperability specification specifies interoperability agreements for supporting Constant Bit Rate (CBR) traffic over ATM networks that comply with the other ATM Forum interoperability agreements. Specifically, this specification supports emulation of existing TDM circuits over ATM networks.

Classical IP (CLIP) - IP over ATM which conforms to RFC 1577.

Clear to Send (CTS) - and RS-232 modem interface control signal (sent from the modem to the DTE on pin 5) which indicates that the attached DTE may begin transmitting; issuance in response to the DTE's RTS.

Clocking - Regularly timed impulses.

Closed User Group - A subgroup of network users that can be its own entity; any member of the subgroup can only communicate with other members of that subgroup.

Coaxial Cable - Coax is a type of electrical communications medium used in the LAN environment. This cable consists of an outer conductor concentric to an inner conductor, separated from each other by insulating material, and covered by some protective outer material. This medium offers large bandwidth, supporting high data rates with high immunity to electrical interference and a low incidence of errors. Coax is subject to distance limitations and is relatively expensive and difficult to install.

Cold Start Trap - an SNMP trap which is sent after a power-cycle (see *trap*).

Collision - Overlapping transmissions that occur when two or more nodes on a LAN attempt to transmit at or about the same time.

Committed Information Rate (CIR) - CIR is the information transfer rate which a network offering Frame Relay Services (FRS) is committed to transfer under normal conditions. The rate is averaged over a minimum increment of time.

Common Channel Signaling (CCS) - A form signaling in which a group of circuits share a signaling channel. Refer to SS7.

Common Management Interface Protocol (CMIP) - An ITU-TSS standard for the message formats and procedures used to exchange management information in order to operate, administer maintain and provision a network.

Concatenation - The connection of transmission channels similar to a chain.

Concentrator - a communications device that offers the ability to concentrate many lower-speed channels into and out of one or more high-speed channels.

Configuration - The phase in which the LE Client discovers the LE Service.

Congestion Management - traffic management feature that helps ensure reasonable service for VBR connections in an ATM network, based on a priority, sustained cell rate (SCR), and peak cell rate (PCR). During times of congestion, bandwidth is reduced to the SCR, based on the priority of the connection.

Connection - the concatenation of ATM Layer links in order to provide an end-to-end information transfer capability to access points.

Connection Admission Control (CAC) - the procedure used to decide if a request for an ATM connection can be accepted based on the attributes of both the requested connection and the existing connections.

Connection Endpoint (CE) - a terminator at one end of a layer connection within a SAP.

Connection Endpoint Identifier (CEI) - an identifier of a CE that can be used to identify the connection at a SAP.

Connectionless Broadband Data Service (CBDS) - A connectionless service similar to Bellcore's SMDS defined by European Telecommunications Standards Institute (ETSI).

Connectionless Service - a type of service in which no pre-determined path or link has been established for transfer of information, supported by AAL 4.

Connectionless Service (CLS) - A service which allows the transfer of information among service subscribers without the need for end-to- end establishment procedures.

Connection-Oriented Service - a type of service in which information always traverses the same pre-established path or link between two points, supported by AAL 3.

Constant Bit Rate (CBR) - a type of traffic that requires a continuous, specific amount of bandwidth over the ATM network (e.g., digital information such as video and digitized voice).

Controlled Slip (CS) - a situation in which one frame's worth of data is either lost or replicated. A controlled slip typically occurs when the sending device and receiving device are not using the same clock.

Convergence Sublayer (CS) - a portion of the AAL. Data is passed first to the CS where it is divided into rational, fixed-length packets or PDUs (Protocol Data Units). For example, AAL 4 processes user data into blocks that are a maximum of 64 kbytes long.

Corresponding Entities - peer entities with a lower layer connection among them.

cpath - a FORE program used to manage virtual paths on a TNX switch running asxd.

cport - a FORE program that monitors and changes the state of ports on a *ForeRunner* switch running asxd.

Cross Connection - a mapping between two channels or paths at a network device.

Customer Premise Equipment (CPE) - equipment that is on the customer side of the point of demarcation, as opposed to equipment that is on a carrier side. See also point of demarcation.

Cut Through - Establishment of a complete path for signaling and/or audio communications.

Cyclic Redundancy Check (CRC) - an error detection scheme in which a number is derived from the data that will be transmitted. By recalculating the CRC at the remote end and comparing it to the value originally transmitted, the receiving node can detect errors.

D3/D4 - Refers to compliance with AT&T TR (Technical Reference) 62411 definitions for coding, supervision, and alarm support. D3/D4 compatibility ensures support of digital PBXes, M24 services, Megacom services, and Mode 3 D3/D4 channel banks at DS-1 level.

D4 Channelization - refers to compliance with AT&T Technical Reference 62411 regarding DS1 frame layout (the sequential assignment of channels and time slot numbers within the DS1).

D4 Framed/Framing Format - in T1, a 193-bit frame format in which the 193rd bit is used for framing and signaling information (the frame/framing bit). To be considered in support of D4 Framing, a device must be able to synchronize and frame-up on the 193rd bit.

Data Communications Equipment (DCE) - a definition in the RS232C standard that describes the functions of the signals and the physical characteristics of an interface for a communication device such as a modem.

Data Country Code (DCC) - This specifies the country in which an address is registered. The codes are given in ISO 3166. The length of this field is two octets. The digits of the data country code are encoded in Binary Coded Decimal (BCD) syntax. The codes will be left justified and padded on the right with the hexadecimal value “F” to fill the two octets.

Data Link - Communications connection used to transmit data from a source to a destination.

Data Link Connection Identifier (DLCI) - connection identifier associated with frame relay packets that serves the same functions as, and translates directly to, the VPI/VCI on an ATM cell.

Data Link Layer - Layer 2 of the OSI model, responsible for encoding data and passing it to the physical medium. The IEEE divides this layer into the LLC (Logical Link Control) and MAC (Media Access Control) sublayers.

Data Set Ready (DSR) - an RS-232 modem interface control signal (sent from the modem to the DTE on pin 6) which indicates that the modem is connected to the telephone circuit. Usually a prerequisite to the DTE issuing RTS.

Data Terminal Equipment (DTE) - generally user devices, such as terminals and computers, that connect to data circuit-terminating equipment. They either generate or receive the data carried by the network.

Data Terminal Ready (DTR) - an RS232 modem interface control signal (sent from the DTE to the modem on pin 20) which indicates that the DTE is ready for data transmission and which requests that the modem be connected to the telephone circuit.

Datagram - a packet of information used in a connectionless network service that is routed to its destination using an address included in the datagram's header.

DECnet - Digital Equipment Corporation's proprietary LAN.

Defense Advanced Research Projects Agency (DARPA) - the US government agency that funded the ARPANET.

Demultiplexing - a function performed by a layer entity that identifies and separates SDUs from a single connection to more than one connection (see *multiplexing*).

Destination End Station (DES) - An ATM termination point which is the destination for ATM messages of a connection and is used as a reference point for ABR services. See SES.

Digital Access and Cross-Connect System (DACS) - Digital switching system for routing T1 lines, and DS-0 portions of lines, among multiple T1 ports.

Digital Cross-connect System (DCS) - an electronic patch panel used to route digital signals in a central office.

Digital Standard n (0, 1, 1C, 2, and 3) (DSn) - a method defining the rate and format of digital hierarchy, with asynchronous data rates defined as follows:

DS0	64kb / s	1 voice channel
DS1	1.544Mb / s	24 DS0s
DS1C	3.152 Mb / s	2 DS1s
DS2	6.312 Mb / s	4 DS1s
DS3	44.736 Mb / s	28 DS1s

Synchronous data rates (SONET) are defined as:

STS-1 / OC-1	51.84 Mb / s	28 DS1s or 1 DS3
STS-3 / OC-3	155.52 Mb / s	3 STS-1s byte interleaved
STS-3c / OC-3c	155.52 Mb / s	Concatenated, indivisible payload
STS-12 / OC-12	622.08 Mb / s	12 STS-1s, 4 STS-3cs, or any mixture
STS-12c / OC-12c	622.08 Mb / s	Concatenated, indivisible payload
STS-48 / OC-48	2488.32 Mb / s	48 STS-1s, 16 STS-3cs, or any mixture

DIP (Dual In-line Package) Switch - a device that has two parallel rows of contacts that let the user switch electrical current through a pair of those contacts to on or off. They are used to reconfigure components and peripherals.

Domain Name Server - a computer that converts names to their corresponding Internet numbers. It allows users to telnet or FTP to the name instead of the number.

Domain Naming System (DNS) - the distributed name and address mechanism used in the Internet.

Duplex - Two way communication.

DXI - a generic phrase used in the full names of several protocols, all commonly used to allow a pair of DCE and DTE devices to share the implementation of a particular WAN protocol. The protocols define the packet formats used to transport data between DCE and DTE devices.

DXI Frame Address (DFA) - a connection identifier associated with ATM DXI packets that serves the same functions as, and translates directly to, the VPI/VCI on an ATM cell.

Dynamic Allocation - A technique in which the resources assigned for program execution are determined by criteria applied at the moment of need.

E.164 - A public network addressing standard utilizing up to a maximum of 15 digits. ATM uses E.164 addressing for public network addressing.

E1 - Wide-area digital transmission scheme used predominantly in Europe that carries data at a rate of 2.048 Mbps. E1 lines can be leased for private use from common carriers.

E3 - Wide-area digital transmission scheme used predominantly in Europe that carries data at a rate of 34.368 Mbps. E3 lines can be leased for private use from common carriers.

Edge Device - A physical device which is capable of forwarding packets between legacy interworking interfaces (e.g., Ethernet, Token Ring, etc.) and ATM interfaces based on data-link and network layer information but which does not participate in the running of any network layer routing protocol. An Edge Device obtains forwarding descriptions using the route distribution protocol.

elarp - a FORE program that shows and manipulates MAC and ATM address mappings for LAN Emulation Clients (LECs).

elconfig - a FORE program that shows and modifies LEC configuration. Lets the user set the NSAP address of the LAN Emulation Configuration Server, display the list of Emulated LANs configured in the LECS for this host, display the list of ELANs locally configured along with the membership state of each, and locally administer ELAN membership.

Electrically Erasable Programmable Read Only Memory (EEPROM) - an EPROM that can be cleared with electrical signals rather than the traditional ultraviolet light.

Electromagnetic Interference (EMI) - signals generated and radiated by an electronic device that cause interference with radio communications, among other effects.

Electronics Industries Association (EIA) - a USA trade organization that issues its own standards and contributes to ANSI; developed RS-232. Membership includes USA manufacturers.

Embedded SNMP Agent - an SNMP agent can come in two forms: embedded or proxy. An embedded SNMP agent is integrated into the physical hardware and software of the unit.

Emulated Local Area Network (ELAN) - A logical network initiated by using the mechanisms defined by LAN Emulation. This could include ATM and legacy attached end stations.

End System (ES) - a system where an ATM connection is terminated or initiated (an originating end system initiates the connection; a terminating end system terminates the connection).

End System Identifier (ESI) - This identifier distinguishes multiple nodes at the same level in case the lower level peer group is partitioned.

End-to-End Connection - when used in reference to an ATM network, a connection that travels through an ATM network, passing through various ATM devices and with endpoints at the termination of the ATM network.

Enterprise - Terminology generally referring to customers with multiple, non-contiguous geographic locations.

Equalization (EQL) - the process of compensating for line distortions.

Erasable Programmable Read Only Memory (EPROM) - A PROM which may be erased and rewritten to perform new or different functions (normally done with a PROM burner).

Errored Second (ES) - a second during which at least one code violation occurred.

Ethernet - a 10-Mbps, coaxial standard for LANs in which all nodes connect to the cable where they contend for access.

Excessive Zeroes (EXZ) Error Event - An Excessive Zeroes error event for an AMI-coded signal is the occurrence of more than fifteen contiguous zeroes. For a B8ZS coded signal, the defect occurs when more than seven contiguous zeroes are detected.

Explicit Forward Congestion Indication (EFCI) - the second bit of the payload type field in the header of an ATM cell, the EFCI bit indicates network congestion to receiving hosts. On a congested switch, the EFCI bit is set to “1” by the transmitting network module when a certain number of cells have accumulated in the network module's shared memory buffer. When a cell is received that has its EFCI bit set to “1,” the receiving host notifies the sending host, which should then reduce its transmission rate.

Explicit Rate (ER) - The Explicit Rate is an RM-cell field used to limit the source ACR to a specific value. It is initially set by the source to a requested rate (such as PCR). It may be subsequently reduced by any network element in the path to a value that the element can sustain. ER is formatted as a rate.

Extended Industry Standard Architecture (EISA) - bus architecture for desktop computers that provides a 32-bit data passage and maintains compatibility with the ISA or AT architecture.

Extended Super Frame (ESF) - a T1 framing format that utilizes the 193rd bit as a framing bit, but whose Superframe is made up of 24 frames instead of 12 as in D4 format. ESF also provides CRC error detection and maintenance data link functions.

Exterior Gateway Protocol (EGP) - used by gateways in an internet, connecting autonomous networks.

Fairness - related to Generic Flow Control, fairness is defined as meeting all of the agreed quality of service requirements by controlling the order of service for all active connections.

Far End Block Error (FEBE) - an error detected by extracting the 4-bit FEBE field from the path status byte (G1). The legal range for the 4-bit field is between 0000 and 1000, representing zero to eight errors. Any other value is interpreted as zero errors.

Far End Receive Failure (FERF) - a line error asserted when a 110 binary pattern is detected in bits 6, 7, 8 of the K2 byte for five consecutive frames. A line FERF is removed when any pattern other than 110 is detected in these bits for five consecutive frames.

Far-End - in a relationship between two devices in a circuit, the far-end device is the one that is remote.

Face Contact (FC) - Designation for fiber optic connector designed by Nippon Telegraph and Telephone which features a movable anti-rotation key allowing good repeatable performance despite numerous mating. Normally referred to as Fiber Connector, FC actually stands for Face Contact and sometimes linked with PC (Point Contact), designated as FC or FC-PC.

FCC Part 68 - The FCC rules regulating the direct connection of non-telephone company provided equipment to the public telephone network.

Federal Communications Commission (FCC) - a board of commissioners appointed by the President under the Communications Act of 1934, with the authority to regulate all interstate telecommunications originating in the United States, including transmission over phone lines.

Fiber Distributed Data Interface (FDDI) - high-speed data network that uses fiber-optic as the physical medium. Operates in similar manner to Ethernet or Token Ring, only faster.

File Transfer Protocol (FTP) - a TCP/IP protocol that lets a user on one computer access, and transfer data to and from, another computer over a network. ftp is usually the name of the program the user invokes to accomplish this task.

First-In, First-Out (FIFO) - method of coordinating the sequential flow of data through a buffer.

Flag - a bit pattern of six binary “1”s bounded by a binary “0” at each end (forms a 0111 1110 or Hex “7E”). It is used to mark the beginning and/or end of a frame.

Flow Control - The way in which information is controlled in a network to prevent loss of data when the receiving buffer is near its capacity.

***ForeThought* PNNI (FT-PNNI) -** a FORE Systems routing and signalling protocol that uses private ATM (NSAP) addresses; a precursor to ATM Forum PNNI (see PNNI).

Forward Error Correction (FEC) - A technique used by a receiver for correcting errors incurred in transmission over a communications channel without requiring retransmission of any information by the transmitter; typically involves a convolution of the transmitted bits and the appending of extra bits by both the receiver and transmitter using a common algorithm.

Forward Explicit Congestion Notification (FECN) - Bit set by a Frame Relay network to inform data terminal equipment (DTE) receiving the frame that congestion was experienced in the path from source to destination. DTE receiving frames with the FECN bit set can request that higher-level protocols take flow control action as appropriate.

Fractional T1 - the use of bandwidth in 64Kbps increments up to 1.544Mbps from a T1 facility.

Frame - a variable length group of data bits with a specific format containing flags at the beginning and end to provide demarcation.

Frame Check Sequence (FCS) - In bit-oriented protocols, a 16-bit field that contains transmission error checking information, usually appended to the end of the frame.

Frame Relay - a fast packet switching protocol based on the LAPD protocol of ISDN that performs routing and transfer with less overhead processing than X.25.

Frame Synchronization Error - an error in which one or more time slot framing bits are in error.

Frame-Based UNI (FUNI) - An ATM switch-based interface which accepts frame-based ATM traffic and converts it into cells.

Frame-Relay Service (FRS) - A connection oriented service that is capable of carrying up to 4096 bytes per frame.

Framing - a protocol that separates incoming bits into identifiable groups so that the receiving multiplexer recognizes the grouping.

Frequency Division Multiplexing (FDM) - a method of dividing an available frequency range into parts with each having enough bandwidth to carry one channel.

Gbps - gigabits per second (billion)

Generic Cell Rate Algorithm (GCRA) - an algorithm which is employed in traffic policing and is part of the user / network service contract. The GCRA is a scheduling algorithm which ensures that cells are marked as conforming when they arrive when expected or later than expected and non-conforming when they arrive sooner than expected.

Generic Connection Admission Control (GCAC) - This is a process to determine if a link has potentially enough resources to support a connection.

Generic Flow Control (GFC) - the first four bits of the first byte in an ATM cell header. Used to control the flow of traffic across the User-to-Network Interface (UNI), and thus into the network. Exact mechanisms for flow control are still under investigation and no explicit definition for this field exists at this time. (This field is used only at the UNI; for NNI-NNI use (between network nodes), these four bits provide additional network address capacity, and are appended to the VPI field.)

GIO - a proprietary bus architecture used in certain Silicon Graphics, Inc. workstations.

Header - protocol control information located at the beginning of a protocol data unit.

Header Error Control (HEC) - a CRC code located in the last byte of an ATM cell header that is used for checking cell header integrity only.

High Density Bipolar (HDB3) - A bipolar coding method that does not allow more than 3 consecutive zeroes.

High Level Data Link Control (HDLC) - An ITU-TSS link layer protocol standard for point-to-point and multi-point communications.

High Performance Parallel Interface (HIPPI) - ANSI standard that extends the computer bus over fairly short distances at speeds of 800 and 1600 Mbps.

High-Speed Serial Interface (HSSI) - a serial communications connection that operates at speeds of up to 1.544 Mbps.

Host - In a network, the primary or controlling computer in a multiple computer installation.

HPUX - the Hewlett-Packard version of UNIX.

Hub - a device that connects several other devices, usually in a star topology.

I/O Module - FORE's interface cards for the LAX-20 LAN Access Switch, designed to connect Ethernet, Token Ring, and FDDI LANs to TNX ATM networks.

Institute of Electrical and Electronics Engineers (IEEE) - the world's largest technical professional society. Based in the U.S., the IEEE sponsors technical conferences, symposia & local meetings worldwide, publishes nearly 25% of the world's technical papers in electrical, electronics & computer engineering, provides educational programs for members, and promotes standardization.

IEEE 802 - Standards for the interconnection of LAN computer equipment. Deals with the Data Link Layers of the ISO Reference Model for OSI.
IEEE 802.1 - Defines the high-level network interfaces such as architecture, internetworking and network management.
IEEE 802.2 - Defines the Logical Link Control interface between the Data Link and Network Layers.
IEEE 802.3 - Defines CSMA / CD (Ethernet).
IEEE 802.4 - Defines the token-passing bus.
IEEE 802.5 - Defines the Token Ring access methodology. This standard incorporates IBM's Token Ring specifications.
IEEE 802.6 - Defines Metropolitan Area Networks.
IEEE 802.7 - The broadband technical advisory group.
IEEE 802.8 - The fiber optics technical advisory group.
IEEE 802.9 - Defines integrated data and voice networks.

Integrated Services Digital Network (ISDN) - an emerging technology that is beginning to be offered by the telephone carriers of the world. ISDN combines voice and digital network services into a single medium or wire.

Interexchange Carriers (IXC) - Long-distance communications companies that provide service between Local Access Transport Areas (LATAs).

Interface Data - the unit of information transferred to / from the upper layer in a single interaction across a SAP. Each Interface Data Unit (IDU) controls interface information and may also contain the whole or part of the SDU.

Interface Data Unit (IDU) - The unit of information transferred to / from the upper layer in a single interaction across the SAP. Each IDU contains interface control information and may also contain the whole or part of the SDU.

Interim Local Management Interface (ILMI) - the standard that specifies the use of the Simple Network Management Protocol (SNMP) and an ATM management information base (MIB) to provide network status and configuration information.

Intermediate System (IS) - a system that provides forwarding functions or relaying functions or both for a specific ATM connection. OAM cells may be generated and received.

International Standards Organization (ISO) - a voluntary, non treaty organization founded in 1946 that is responsible for creating international standards in many areas, including computers and communications.

International Telephone and Telegraph Consultative Committee (CCITT) - the international standards body for telecommunications.

Internet - (note the capital "I") the largest internet in the world including large national backbone nets and many regional and local networks worldwide. The Internet uses the TCP/IP suite. Networks with only e-mail connectivity are not considered on the Internet.

internet - while an internet is a network, the term "internet" is usually used to refer to a collection of networks interconnected with routers.

Internet Addresses - the numbers used to identify hosts on an internet network. Internet host numbers are divided into two parts; the first is the network number and the second, or local, part is a host number on that particular network. There are also three classes of networks in the Internet, based on the number of hosts on a given network. Large networks are classified as Class A, having addresses in the range 1-126 and having a maximum of 16,387,064 hosts. Medium networks are classified as Class B, with addresses in the range 128-191 and with a maximum of 64,516 hosts. Small networks are classified as Class C, having addresses in the range 192-254 with a maximum of 254 hosts. Addresses are given as dotted decimal numbers in the following format:

nnn.nnn.nnn.nnn

In a Class A network, the first of the numbers is the network number, the last three numbers are the local host address.

In a Class B network, the first two numbers are the network, the last two are the local host address.

In a Class C network, the first three numbers are the network address, the last number is the local host address.

The following table summarizes the classes and sizes:

Class	First #	Max# Hosts
A	1-126	16,387,064
B	129-191	64,516
C	192-223	254

Network mask values are used to identify the network portion and the host portion of the address. Default network masks are as follows:

Class A - 255.0.0.0

Class B - 255.255.0.0

Class C - 255.255.255.0

Subnet masking is used when a portion of the host ID is used to identify a subnetwork. For example, if a portion of a Class B network address is used for a subnetwork, the mask could be set as 255.255.255.0. This would allow the third byte to be used as a subnetwork address. All hosts on the network would still use the IP address to get on the Internet.

Internet Control Message Protocol (ICMP) - the protocol that handles errors and control messages at the IP layer. ICMP is actually a part of the IP protocol layer. It can generate error messages, test packets, and informational messages related to IP.

Internet Engineering Task Force (IETF) - a large, open, international community of network designers, operators, vendors and researchers whose purpose is to coordinate the operation, management and evolution of the Internet to resolve short- and mid-range protocol and architectural issues.

Internet Protocol (IP) - a connectionless, best-effort packet switching protocol that offers a common layer over dissimilar networks.

Internetwork Packet Exchange (IPX) Protocol - a NetWare protocol similar to the Xerox Network Systems (XNS) protocol that provides datagram delivery of messages.

Interoperability - The ability of software and hardware on multiple machines, from multiple vendors, to communicate.

Interworking Function (IWF) - provides a means for two different technologies to interoperate.

IP Address - a unique 32-bit integer used to identify a device in an IP network. You will most commonly see IP addresses written in “dot” notation (e.g., 192.228.32.14).

IP Netmask - a 32-bit pattern that is combined with an IP address to determine which bits of an IP address denote the network number and which denote the host number. Netmasks are useful for sub-dividing IP networks. IP netmasks are written in “dot” notation (e.g., 255.255.0.0).

ISA Bus - a bus standard developed by IBM for expansion cards in the first IBM PC. The original bus supported a data path only 8 bits wide. IBM subsequently developed a 16-bit version for its AT class computers. The 16-bit AT ISA bus supports both 8- and 16-bit cards. The 8-bit bus is commonly called the PC/XT bus, and the 16-bit bus is called the AT bus.

Isochronous - signals carrying embedded timing information or signals that are dependent on uniform timing; usually associated with voice and/or video transmission.

International Telecommunications Union Telecommunications (ITU-T) - an international body of member countries whose task is to define recommendations and standards relating to the international telecommunications industry. The fundamental standards for ATM have been defined and published by the ITU-T (Previously CCITT).

J2 - Wide-area digital transmission scheme used predominantly in Japan that carries data at a rate of 6.312 Mbps.

Jitter - analog communication line distortion caused by variations of a signal from its reference timing position.

Joint Photographic Experts Group (JPEG) - An ISO Standards group that defines how to compress still pictures.

Jumper - a patch cable or wire used to establish a circuit, often temporarily, for testing or diagnostics; also, the devices, shorting blocks, used to connect adjacent exposed pins on a printed circuit board that control the functionality of the card.

Kbps - kilobits per second (thousand)

LAN Access Concentrator - a LAN access device that allows a shared transmission medium to accommodate more data sources than there are channels currently available within the transmission medium.

LAN Emulation Address Resolution Protocol (LE_ARP) - A message issued by a LE client to solicit the ATM address of another function.

LAN Emulation Client (LEC) - the component in an end system that performs data forwarding, address resolution, and other control functions when communicating with other components within an ELAN.

LAN Emulation Configuration Server (LECS) - the LECS is responsible for the initial configuration of LECs. It provides information about available ELANs that a LEC may join, together with the addresses of the LES and BUS associated with each ELAN.

LAN Emulation Server (LES) - the LES implements the control coordination function for an ELAN by registering and resolving MAC addresses to ATM addresses.

LAN Emulation (LANE) - technology that allows an ATM network to function as a LAN backbone. The ATM network must provide multicast and broadcast support, address mapping (MAC-to-ATM), SVC management, and a usable packet format. LANE also defines Ethernet and Token Ring ELANs.

lane - a program that provides control over the execution of the LAN Emulation Server (LES), Broadcast/Unknown Server (BUS), and LAN Emulation Configuration Server (LECS) on the local host.

Latency - The time interval between a network station seeking access to a transmission channel and that access being granted or received.

Layer Entity - an active layer within an element.

Layer Function - a part of the activity of the layer entities.

Layer Service - a capability of a layer and the layers beneath it that is provided to the upper layer entities at the boundary between that layer and the next higher layer.

Layer User Data - the information transferred between corresponding entities on behalf of the upper layer or layer management entities for which they are providing services.

le - a FORE program that implements both the LAN Emulation Server (LES) and the Broadcast/Unknown Server (BUS).

Leaky Bucket - informal cell policing term for the Generic Cell Rate Algorithm which in effect receives cells into a bucket and leaks them out at the specified or contracted rate (i.e., PCR).

Least Significant Bit (LSB) - lowest order bit in the binary representation of a numerical value.

lecs - a FORE program that implements the assignment of individual LECs to different emulated LANs.

leq - a FORE program that provides information about an ELAN. This information is obtained from the LES, and includes MAC addresses registered on the ELAN together with their corresponding ATM addresses.

Line Build Out (LBO) - Because T1 circuits require the last span to lose 15-22.5 dB, a selectable output attenuation is generally required of DTE equipment (typical selections include 0.0, 7.5 and 15 dB of loss at 772 KHz).

Line Code Violations (LCV) - Error Event. A Line Coding Violation (LCV) is the occurrence of either a Bipolar Violation (BPV) or Excessive Zeroes (EXZ) Error Event.

Link - An entity that defines a topological relationship (including available transport capacity) between two nodes in different subnetworks. Multiple links may exist between a pair of subnetworks. Synonymous with logical link.

Link Access Procedure, Balanced (LAPB) - Data link protocol in the X.25 protocol stack. LAPB is a bit-oriented protocol derived from HDLC. See also HDLC and X.25.

Link Down Trap - an SNMP trap, sent when an interface changes from a normal state to an error state, or is disconnected.

Link Layer - layer in the OSI model regarding transmission of data between network nodes.

Link Up Trap - an SNMP trap, sent when an interface changes from an error condition to a normal state.

Load Sharing - Two or more computers in a system that share the load during peak hours. During periods of non peak hours, one computer can manage the entire load with the other acting as a backup.

Local Access and Transport Area (LATA) - Geographic boundaries of the local telephone network, specified by the FCC, in which a single LEC may perform its operations. Communications outside or between LATAs are provided by IXCs.

Local Area Network (LAN) - a data network intended to serve an area of only a few square kilometers or less. Because the network is known to cover only a small area, optimizations can be made in the network signal protocols that permit higher data rates.

Logical Link Control (LLC) - protocol developed by the IEEE 802 committee for data-link-layer transmission control; the upper sublayer of the IEEE Layer 2 (OSI) protocol that complements the MAC protocol; IEEE standard 802.2; includes end-system addressing and error checking.

Loopback - a troubleshooting technique that returns a transmitted signal to its source so that the signal can be analyzed for errors. Typically, a loopback is set at various points in a line until the section of the line that is causing the problem is discovered.

looptest - program that tests an interface for basic cell reception and transmission functionality, usually used for diagnostic purposes to determine if an interface is functioning properly.

Loss Of Frame (LOF) - a type of transmission error that may occur in wide-area carrier lines.

Loss Of Pointer (LOP) - a type of transmission error that may occur in wide-area carrier lines.

Loss Of Signal (LOS) - a type of transmission error that may occur in wide-area carrier lines, or a condition declared when the DTE senses a loss of a DS1 signal from the CPE for more the 150 milliseconds (the DTE generally responds with an all ones “Blue or AIS” signal).

Management Information Base (MIB) - the set of parameters that an SNMP management station can query or set in the SNMP agent of a networked device (e.g., router).

Maximum Burst Size (MBS) - the Burst Tolerance (BT) is conveyed through the MBS which is coded as a number of cells. The BT together with the SCR and the GCRA determine the MBS that may be transmitted at the peak rate and still be in conformance with the GCRA.

Maximum Burst Tolerance - the largest burst of data that a network device is guaranteed to handle without discarding cells or packets. Bursts of data larger than the maximum burst size may be subject to discard.

Maximum Cell Delay Variance (MCDV) - This is the maximum two-point CDV objective across a link or node for the specified service category.

Maximum Cell Loss Ratio (MCLR) - This is the maximum ratio of the number of cells that do not make it across the link or node to the total number of cells arriving at the link or node.

Maximum Cell Transfer Delay (MCTD) - This is the sum of the fixed delay component across the link or node and MCDV.

Maximum Transmission Unit (MTU) - the largest unit of data that can be sent over a type of physical medium.

Mbps - megabits per second (million)

Media Access Control (MAC) - a media-specific access control protocol within IEEE 802 specifications; currently includes variations for Token Ring, token bus, and CSMA/CD; the lower sublayer of the IEEE’s link layer (OSI), which complements the Logical Link Control (LLC).

Media Attachment Unit (MAU) - device used in Ethernet and IEEE 802.3 networks that provides the interface between the AUI port of a station and the common medium of the Ethernet. The MAU, which can be built into a station or can be a separate device, performs physical layer functions including conversion of the digital data from the Ethernet interface, collision detection, and injection of bits onto the network.

Media Interface Connector (MIC) - fiber optic connector that joins fiber to the FDDI controller.

Message Identifier (MID) - message identifier used to associate ATM cells that carry segments from the same higher layer packet.

Metasignalling - an ATM Layer Management (LM) process that manages different types of signalling and possibly semipermanent virtual channels (VCs), including the assignment, removal, and checking of VCs.

Metasignalling VCs - the standardized VCs that convey metasignalling information across a User-to-Network Interface (UNI).

Metropolitan Area Network (MAN) - network designed to carry data over an area larger than a campus such as an entire city and its outlying area.

MicroChannel - a proprietary 16- or 32-bit bus developed by IBM for its PS/2 computers' internal expansion cards; also offered by others.

Minimum Cell Rate (MCR) - parameter defined by the ATM Forum for ATM traffic management, defined only for ABR transmissions and specifying the minimum value for the ACR.

Most Significant Bit (MSB) - highest order bit in the binary representation of a numerical value.

Motion Picture Experts Group (MPEG) - ISO group dealing with video and audio compression techniques and mechanisms for multiplexing and synchronizing various media streams.

MPOA Client - A device which implements the client side of one or more of the MPOA protocols, (i.e., is a SCP client and/or an RDP client. An MPOA Client is either an Edge Device Functional Group (EDFG) or a Host Behavior Functional Group (HBFG).

MPOA Server - An MPOA Server is any one of an ICFG or RSFG.

MPOA Service Area - The collection of server functions and their clients. A collection of physical devices consisting of an MPOA server plus the set of clients served by that server.

MPOA Target - A set of protocol address, path attributes, (e.g., internetwork layer QoS, other information derivable from received packet) describing the intended destination and its path attributes that MPOA devices may use as lookup keys.

Mu-Law - The PCM coding and companding standard used in Japan and North America.

Multicasting - The ability to broadcast messages to one node or a select group of nodes.

Multi-homed - a device having both an ATM and another network connection, like Ethernet.

Multimode Fiber Optic Cable (MMF) - fiber optic cable in which the signal or light propagates in multiple modes or paths. Since these paths may have varying lengths, a transmitted pulse of light may be received at different times and smeared to the point that pulses may interfere with surrounding pulses. This may cause the signal to be difficult or impossible to receive. This pulse dispersion sometimes limits the distance over which a MMF link can operate.

Multiplexing - a function within a layer that interleaves the information from multiple connections into one connection (see demultiplexing).

Multipoint Access - user access in which more than one terminal equipment (TE) is supported by a single network termination.

Multipoint-to-Multipoint Connection - a collection of associated ATM VC or VP links, and their associated endpoint nodes, with the following properties:

1. All N nodes in the connection, called Endpoints, serve as a Root Node in a Point-to-Multipoint connection to all of the (N-1) remaining endpoints.

2. Each of the endpoints can send information directly to any other endpoint, but the receiving endpoint cannot distinguish which of the endpoints is sending information without additional (e.g., higher layer) information.

Multipoint-to-Point Connection - a Point-to-Multipoint Connection may have zero bandwidth from the Root Node to the Leaf Nodes, and non-zero return bandwidth from the Leaf Nodes to the Root Node. Such a connection is also known as a Multipoint-to-Point Connection.

Multiprotocol over ATM (MPOA) - An effort taking place in the ATM Forum to standardize protocols for the purpose of running multiple network layer protocols over ATM.

Narrowband Channel - sub-voicegrade channel with a speed range of 100 to 200 bps.

National TV Standards Committee (NTSC) - Started in the US in 1953 from a specification laid down by the National Television Standards Committee. It takes the B-Y and R-Y color difference signals, attenuates them to I and Q, then modulates them using double-sideband suppressed subcarrier at 3.58MHz. The carrier reference is sent to the receiver as a burst during the back porch. An industry group that defines how television signals are encoded and transmitted in the US. (See also PAL, SECAM for non-U.S. countries).

Near-End - in a relationship between two devices in a circuit, the near-end device is the one that is local.

Network Layer - Layer three In the OSI model, the layer that is responsible for routing data across the network.

Network Management Entity (NM) - body of software in a switching system that provides the ability to manage the PNNI protocol. NM interacts with the PNNI protocol through the MIB.

Network Management Layer (NML) - an abstraction of the functions provided by systems which manage network elements on a collective basis, providing end-to-end network monitoring.

Network Management Station (NMS) - system responsible for managing a network or portion of a network by talking to network management agents, which reside in the managed nodes.

Network Module - ATM port interface cards which may be individually added to or removed from any TNX ATM switch to provide a diverse choice of connection alternatives.

Network Parameter Control (NPC) - Defined as the set of actions taken by the network to monitor and control traffic from the NNI. Its main purpose is to protect network resources from malicious as well as unintentional misbehavior which can affect the QoS of other already established connections by detecting violations of negotiated parameters and taking appropriate actions. Refer to UPC.

Network Redundancy - Duplicated network equipment and/or data which can provide a backup in case of network failures.

Network Service Access Point (NSAP) - OSI generic standard for a network address consisting of 20 octets. ATM has specified E.164 for public network addressing and the NSAP address structure for private network addresses.

Network-to-Network Interface or Network Node Interface (NNI) - the interface between two public network pieces of equipment.

Node - A computer or other device when considered as part of a network.

Non Return to Zero (NRZ) - a binary encoding scheme in which ones and zeroes are represented by opposite and alternating high and low voltages and where there is no return to a zero (reference) voltage between encoded bits.

Non Return to Zero Inverted (NRZI) - A binary encoding scheme that inverts the signal on a “1” and leaves the signal unchanged for a “0”. (Also called transition encoding.)

Nonvolatile Storage - Memory storage that does not lose its contents when power is turned off.

NuBus - a high-speed bus used in Macintosh computers, structured so users can put a card into any slot on the board without creating conflict over the priority between those cards.

nx64K - This refers to a circuit bandwidth or speed provided by the aggregation of nx64 kbps channels (where n= integer > 1). The 64K or DS0 channel is the basic rate provided by the T Carrier systems.

Nyquist Theorem - In communications theory, a formula stating that two samples per cycle is sufficient to characterize a bandwidth limited analog signal; in other words, the sampling rate must be twice the highest frequency component of the signal (i.e., sample 4 KHz analog voice channels 8000 times per second).

Object Identifier (OID) - the address of a MIB variable.

Octet - a grouping of 8 bits; similar, but not identical to, a byte.

One’s Density - The requirement for digital transmission lines in the public switched telephone network that eight consecutive “0”s cannot be in a digital data stream; exists because repeaters and clocking devices within the network will lose timing after receiving eight “0”s in a row; a number of techniques are used to insert a “1” after every seventh-consecutive “0” (see Bit Stuffing).

Open Shortest Path First (OSPF) Protocol - a routing algorithm for IP that incorporates least-cost, equal-cost, and load balancing.

Open Systems Interconnection (OSI) - the 7-layer suite of protocols designed by ISO committees to be the international standard computer network architecture.

OpenView - Hewlett-Packard's network management software.

Operation and Maintenance (OAM) Cell - a cell that contains ATM LM information. It does not form part of the upper layer information transfer.

Optical Carrier level-n (OC-n) - The optical counterpart of STS-n (the basic rate of 51.84 Mbps on which SONET is based is referred to as OC-1 or STS-1).

Organizationally Unique Identifier (OUI) - Part of RFC 1483. A three-octet field in the SubNetwork Attachment Point (SNAP) header, identifying an organization which administers the meaning of the following two octet Protocol Identifier (PID) field in the SNAP header. Together they identify a distinct routed or bridged protocol.

Out-of-Band Management - refers to switch configuration via the serial port or over Ethernet, not ATM.

Out-of-Frame (OOF) - a signal condition and alarm in which some or all framing bits are lost.

Packet - An arbitrary collection of data grouped and transmitted with its user identification over a shared facility.

Packet Assembler Disassembler (PAD) - interface device that buffers data sent to/from character mode devices, and assembles and disassembles the packets needed for X.25 operation.

Packet Internet Groper (ping) - a program used to test reachability of destinations by sending them an ICMP echo request and waiting for a reply.

Packet Level Protocol (PLP) - Network layer protocol in the X.25 protocol stack. Sometimes called X.25 Level 3 or X.25 Protocol.

Packet Switched Network (PSN) - a network designed to carry data in the form of packets. The packet and its format is internal to that network.

Packet Switching - a communications paradigm in which packets (messages) are individually routed between hosts with no previously established communications path.

Payload Scrambling - a technique that eliminates certain bit patterns that may occur within an ATM cell payload that could be misinterpreted by certain sensitive transmission equipment as an alarm condition.

Payload Type (PT) - bits 2...4 in the fourth byte of an ATM cell header. The PT indicates the type of information carried by the cell. At this time, values 0...3 are used to identify various types of user data, values 4 and 5 indicate management information, and values 6 and 7 are reserved for future use.

Peak Cell Rate - at the PHY Layer SAP of a point-to-point VCC, the Peak Cell Rate is the inverse of the minimum inter-arrival time T0 of the request to send an ATM-SDU.

Peak Cell Rate (PCR) - parameter defined by the ATM Forum for ATM traffic management. In CBR transmissions, PCR determines how often data samples are sent. In ABR transmissions, PCR determines the maximum value of the ACR.

Peer Entities - entities within the same layer.

Peripheral Component Interconnect (PCI) - a local-bus standard created by Intel.

Permanent Virtual Channel Connection (PVCC) - A Virtual Channel Connection (VCC) is an ATM connection where switching is performed on the VPI/VCI fields of each cell. A Permanent VCC is one which is provisioned through some network management function and left up indefinitely.

Permanent Virtual Circuit (or Channel) (PVC) - a circuit or channel through an ATM network provisioned by a carrier between two endpoints; used for dedicated long-term information transport between locations.

Permanent Virtual Path Connection (PVPC) - A Virtual Path Connection (VPC) is an ATM connection where switching is performed on the VPI field only of each cell. A PVPC is one which is provisioned through some network management function and left up indefinitely.

Phase Alternate Line (PAL) - Largely a German/British development in the late 60s, used in the UK and much of Europe. The B-Y and R-Y signals are weighted to U and V, then modulated onto a double-sideband suppressed subcarrier at 4.43MHz. The V (R-Y) signal's phase is turned through 180 degrees on each alternate line. This gets rid of NTSC's hue changes with phase errors at the expense of de-saturation. The carrier reference is sent as a burst in the back porch. The phase of the burst is alternated every line to convey the phase switching of the V signal. The burst's average phase is -V. (see NTSC for U.S.).

Physical Layer (PHY) - the actual cards, wires, and/or fiber-optic cabling used to connect computers, routers, and switches.

Physical Layer Connection - an association established by the PHY between two or more ATM-entities. A PHY connection consists of the concatenation of PHY links in order to provide an end-to-end transfer capability to PHY SAPs.

Physical Layer Convergence Protocol (PLCP) - a framing protocol that runs on top of the T1 or E1 framing protocol.

Physical Medium (PM) - Refers to the actual physical interfaces. Several interfaces are defined including STS-1, STS-3c, STS-12c, STM-1, STM-4, DS1, E1, DS2, E3, DS3, E4, FDDI-based, Fiber Channel-based, and STP. These range in speeds from 1.544Mbps through 622.08 Mbps.

Physical Medium Dependent (PMD) - a sublayer concerned with the bit transfer between two network nodes. It deals with wave shapes, timing recovery, line coding, and electro-optic conversions for fiber based links.

Plesiochronous - two signals are plesiochronous if their corresponding significant instants occur at nominally the same rate, with variations in rate constrained to specified limits.

Point of Demarcation - the dividing line between a carrier and the customer premise that is governed by strict standards that define the characteristics of the equipment on each side of the demarcation. Equipment on one side of the point of demarcation is the responsibility of the customer. Equipment on the other side of the point of demarcation is the responsibility of the carrier.

Point-to-Multipoint Connection - a collection of associated ATM VC or VP links, with associated endpoint nodes, with the following properties:

1. One ATM link, called the Root Link, serves as the root in a simple tree topology. When the Root node sends information, all of the remaining nodes on the connection, called Leaf nodes, receive copies of the information.

2. Each of the Leaf Nodes on the connection can send information directly to the Root Node. The Root Node cannot distinguish which Leaf is sending information without additional (higher layer) information. (See the following note for Phase 1.)

3. The Leaf Nodes cannot communicate directly to each other with this connection type.

Note: Phase 1 signalling does not support traffic sent from a Leaf to the Root.

Point-to-Point Connection - a connection with only two endpoints.

Point-to-Point Protocol (PPP) - Provides a method for transmitting packets over serial point-to-point links.

Policing - the function that ensures that a network device does not accept traffic that exceeds the configured bandwidth of a connection.

Port Identifier - The identifier assigned by a logical node to represent the point of attachment of a link to that node.

Presentation Layer - Sixth layer of the OSI model, providing services to the application layer.

Primary Reference Source (PRS) - Equipment that provides a timing signal whose long-term accuracy is maintained at 1 x 10 -11 or better with verification to universal coordinated time (UTC) and whose timing signal is used as the basis of reference for the control of other clocks within a network.

Primitive - an abstract, implementation-independent interaction between a layer service user and a layer service provider.

Priority - the parameter of ATM connections that determines the order in which they are reduced from the peak cell rate to the sustained cell rate in times of congestion. Connections with lower priority (4 is low, 1 is high) are reduced first.

Private Branch Exchange (PBX) - a private phone system (switch) that connects to the public telephone network and offers in-house connectivity. To reach an outside line, the user must dial a digit like 8 or 9.

Private Network Node Interface or Private Network-to-Network Interface (PNNI) - a protocol that defines the interaction of private ATM switches or groups of private ATM switches

Programmable Read-Only Memory (PROM) - a chip-based information storage area that can be recorded by an operator but erased only through a physical process.

Protocol - a set of rules and formats (semantic and syntactic) that determines the communication behavior of layer entities in the performance of the layer functions.

Protocol Control Information - the information exchanged between corresponding entities using a lower layer connection to coordinate their joint operation.

Protocol Data Unit (PDU) - a unit of data specified in a layer protocol and consisting of protocol control information and layer user data.

Proxy - the process in which one system acts for another system to answer protocol requests.

Proxy Agent - an agent that queries on behalf of the manager, used to monitor objects that are not directly manageable.

Public Data Network (PDN) - a network designed primarily for data transmission and intended for sharing by many users from many organizations.

Pulse Code Modulation (PCM) - a modulation scheme that samples the information signals and transmits a series of coded pulses to represent the data.

Q.2931 - Derived from Q.93B, the narrowband ISDN signalling protocol, an ITU standard describing the signalling protocol to be used by switched virtual circuits on ATM LANs.

Quality of Service (QoS) - Quality of Service is defined on an end-to-end basis in terms of the following attributes of the end-to-end ATM connection:

Cell Loss Ratio
Cell Transfer Delay
Cell Delay Variation

Queuing Delay (QD) - refers to the delay imposed on a cell by its having to be buffered because of unavailability of resources to pass the cell onto the next network function or element. This buffering could be a result of oversubscription of a physical link, or due to a connection of higher priority or tighter service constraints getting the resource of the physical link.

Radio Frequency Interference (RFI) - the unintentional transmission of radio signals. Computer equipment and wiring can both generate and receive RFI.

Real-Time Clock - a clock that maintains the time of day, in contrast to a clock that is used to time the electrical pulses on a circuit.

Red Alarm - In T1, a red alarm is generated for a locally detected failure such as when a condition like OOF exists for 2.5 seconds, causing a CGA, (Carrier Group Alarm).

Reduced Instruction Set Computer (RISC) - a generic name for CPUs that use a simpler instruction set than more traditional designs.

Redundancy - In a data transmission, the fragments of characters and bits that can be eliminated with no loss of information.

Registration - The address registration function is the mechanism by which Clients provide address information to the LAN Emulation Server.

Relaying - a function of a layer by means of which a layer entity receives data from a corresponding entity and transmits it to another corresponding entity.

Request To Send (RTS) - an RS-232 modem interface signal (sent from the DTE to the modem on pin 4) which indicates that the DTE has data to transmit.

Requests For Comment (RFCs) - IETF documents suggesting protocols and policies of the Internet, inviting comments as to the quality and validity of those policies. These comments are collected and analyzed by the IETF in order to finalize Internet standards.

RFC1483 - Multiprotocol Encapsulation over ATM Adaptation Layer 5.
RFC1490 - Multiprotocol Interconnect over Frame Relay.
RFC1577 - Classical IP and ARP over ATM.
RFC1755 - ATM Signaling Support for IP over ATM.

Robbed-Bit Signaling - In T1, refers to the use of the least significant bit of every word of frames 6 and 12 (D4), or 6, 12, 18, and 24 (ESF) for signaling purposes.

Route Server - A physical device that runs one or more network layer routing protocols, and which uses a route query protocol in order to provide network layer routing forwarding descriptions to clients.

Router - a device that forwards traffic between networks or subnetworks based on network layer information.

Routing Domain (RD) - A group of topologically contiguous systems which are running one instance of routing.

Routing Information Protocol (RIP) - a distance vector-based protocol that provides a measure of distance, or hops, from a transmitting workstation to a receiving workstation.

Routing Protocol - A general term indicating a protocol run between routers and/or route servers in order to exchange information used to allow computation of routes. The result of the routing computation will be one or more forwarding descriptions.

SBus - hardware interface for add-in boards in later-version Sun 3 workstations.

Scalable Processor Architecture Reduced instruction set Computer (SPARC) - a powerful workstation similar to a reduced-instruction-set-computing (RISC) workstation.

Segment - a single ATM link or group of interconnected ATM links of an ATM connection.

Segmentation And Reassembly (SAR) - the SAR accepts PDUs from the CS and divides them into very small segments (44 bytes long). If the CS-PDU is less than 44 bytes, it is padded to 44 with zeroes. A two-byte header and trailer are added to this basic segment. The header identifies the message type (beginning, end, continuation, or single) and contains sequence numbering and message identification. The trailer gives the SAR-PDU payload length, exclusive of pad, and contains a CRC check to ensure the SAR-PDU integrity. The result is a 48-byte PDU that fits into the payload field of an ATM cell.

Selector (SEL) - A subfield carried in SETUP message part of ATM endpoint address Domain specific Part (DSP) defined by ISO 10589, not used for ATM network routing, used by ATM end systems only.

Semipermanent Connection - a connection established via a service order or via network management.

Serial Line IP (SLIP) - A protocol used to run IP over serial lines, such as telephone circuits or RS-232 cables, interconnecting two systems.

Service Access Point (SAP) - the point at which an entity of a layer provides services to its LM entity or to an entity of the next higher layer.

Service Data Unit (SDU) - a unit of interface information whose identity is preserved from one end of a layer connection to the other.

Service Specific Connection Oriented Protocol (SSCOP) - an adaptation layer protocol defined in ITU-T Specification: Q.2110.

Service Specific Convergence Sublayer (SSCS) - The portion of the convergence sublayer that is dependent upon the type of traffic that is being converted.

Session Layer - Layer 5 in the OSI model that is responsible for establishing and managing sessions between the application programs running in different nodes.

Severely Errored Seconds (SES) - a second during which more event errors have occurred than the SES threshold (normally 10-3).

Shaping Descriptor - *n* ordered pairs of GCRA parameters (I,L) used to define the negotiated traffic shape of an APP connection. The traffic shape refers to the load-balancing of a network, where load-balancing means configuring data flows to maximize network efficiency.

Shielded Pair - Two insulated wires in a cable wrapped with metallic braid or foil to prevent interference and provide noise free transmission.

Shielded Twisted Pair (STP) - two or more insulated wires, twisted together and then wrapped in a cable with metallic braid or foil to prevent interference and offer noise-free transmissions.

Signaling System No. 7 (SS7) - The SS7 protocol has been specified by ITU-T and is a protocol for interexchange signaling.

Simple and Efficient Adaptation Layer (SEAL) - also called AAL 5, this ATM adaptation layer assumes that higher layer processes will provide error recovery, thereby simplifying the SAR portion of the adaptation layer. Using this AAL type packs all 48 bytes of an ATM cell information field with data. It also assumes that only one message is crossing the UNI at a time. That is, multiple end-users at one location cannot interleave messages on the same VC, but must queue them for sequential transmission.

Simple Gateway Management Protocol (SGMP) - the predecessor to SNMP.

Simple Mail Transfer Protocol (SMTP) - the Internet electronic mail protocol used to transfer electronic mail between hosts.

Simple Network Management Protocol (SNMP) - the Internet standard protocol for managing nodes on an IP network.

Simple Protocol for ATM Network Signalling (SPANS) - FORE Systems' proprietary signalling protocol used for establishing SVCs between FORE Systems equipment.

Single Mode Fiber (SMF) - Fiber optic cable in which the signal or light propagates in a single mode or path. Since all light follows the same path or travels the same distance, a transmitted pulse is not dispersed and does not interfere with adjacent pulses. SMF fibers can support longer distances and are limited mainly by the amount of attenuation. Refer to MMF.

Small Computer Systems Interface (SCSI) - a standard for a controller bus that connects hardware devices to their controllers on a computer bus, typically used in small systems.

Smart PVC (SPVC) - a generic term for any communications medium which is permanently provisioned at the end points, but switched in the middle. In ATM, there are two kinds of SPVCs: smart permanent virtual path connections (SPVPCs) and smart permanent virtual channel connections (SPVCCs).

snmpd - an SMNP agent for a given adapter card.

Source - Part of communications system which transmits information.

Source Address (SA) - The address from which the message or data originated.

Source MAC Address (SA) - A six octet value uniquely identifying an end point and which is sent in an IEEE LAN frame header to indicate source of frame.

Source Traffic Descriptor - a set of traffic parameters belonging to the ATM Traffic Descriptor used during the connection set-up to capture the intrinsic traffic characteristics of the connection requested by the source.

Spanning Tree Protocol - provides loop-free topology in a network environment where there are redundant paths.

Static Route - a route that is entered manually into the routing table.

Statistical Multiplexing - a technique for allowing multiple channels and paths to share the same link, typified by the ability to give the bandwidth of a temporarily idle channel to another channel.

Stick and Click (SC) - Designation for an Optical Connector featuring a 2.5 mm physically contacting ferrule with a push-pull mating design. Commonly referred to as Structured Cabling, Structured Connectors or Stick and Click

Stick and Turn (ST) - A fiber-optic connector designed by AT&T which uses the bayonet style coupling rather than screw-on as the SMA uses. The ST is generally considered the eventual replacement for the SMA type connector.

Store-and-Forward - the technique of receiving a message, storing it until the proper outgoing line is available, then retransmitting it, with no direct connection between incoming and outgoing lines.

Straight Tip (ST) - see *Stick and Turn*.

Structured Cabling (SC) - see *Stick and Click*.

Structured Connectors (SC) - see *Stick and Click*.

Sublayer - a logical subdivision of a layer.

SubNetwork Access Protocol (SNAP) - a specially reserved variant of IEEE 802.2 encoding SNAP indicates to look further into the packet where it will fine a Type field.

Subscriber Network Interface (SNI) - the interface between an SMDS end user's CPE and the network directly serving the end user, supported by either a DS1 or DS3 access arrangement.

Super Frame (SF) - a term used to describe the repeating 12 D4 frame format that composes a standard (non-ESF) T1 service.

Super User - a login ID that allows unlimited access to the full range of a device's functionality, including especially the ability to reconfigure the device and set passwords.

Sustainable Cell Rate (SCR) - ATM Forum parameter defined for traffic management. For VBR connections, SCR determines the long-term average cell rate that can be transmitted.

Sustained Information Rate (SIR) - In ATM this refers to the long-term average data transmission rate across the User-to-Network Interface. In SMDS this refers to the committed information rate (similar to CIR for Frame Relay Service).

Switch - Equipment used to interconnect lines and trunks.

Switched Connection - A connection established via signaling.

Switched Multimegabit Data Service (SMDS) - a high-speed, datagram-based, public data network service expected to be widely used by telephone companies in their data networks.

Switched Virtual Channel Connection (SVCC) - A Switched VCC is one which is established and taken down dynamically through control signaling. A Virtual Channel Connection (VCC) is an ATM connection where switching is performed on the VPI/VCI fields of each cell.

Switched Virtual Circuit (or Channel) (SVC) - a channel established on demand by network signalling, used for information transport between two locations and lasting only for the duration of the transfer; the datacom equivalent of a dialed telephone call.

Switched Virtual Path Connection (SVPC) - a connection which is established and taken down dynamically through control signaling. A Virtual Path Connection (VPC) is an ATM connection where switching is performed on the VPI field only of each cell.

Switching System - A set of one or more systems that act together and appear as a single switch for the purposes of PNNI routing.

Symmetric Connection - a connection with the same bandwidth specified for both directions.

Synchronous - signals that are sourced from the same timing reference and hence are identical in frequency.

Synchronous Data Link Control (SDLC) - IBM's data link protocol used in SNA networks.

Synchronous Optical Network (SONET) - a body of standards that defines all aspects of transporting and managing digital traffic over optical facilities in the public network.

Synchronous Payload Envelope (SPE) - the payload field plus a little overhead of a basic SONET signal.

Synchronous Transfer Mode (STM) - a transport and switching method that depends on information occurring in regular, fixed patterns with respect to a reference such as a frame pattern.

Synchronous Transport Signal (STS) - a SONET electrical signal rate.

Systeme En Coleur Avec Memoire (SECAM) - Sequential and Memory Color Television - Started in France in the late 60s, and used by other countries with a political affiliation. This is. The B-Y and R-Y signals are transmitted on alternate lines modulated on an FM subcarrier. The memory is a one line delay line in the receiver to make both color difference signals available at the same time on all lines. Due to FM, the signal is robust in difficult terrain.

Systems Network Architecture (SNA) - a proprietary networking architecture used by IBM and IBM-compatible mainframe computers.

T1 - a specification for a transmission line. The specification details the input and output characteristics and the bandwidth. T1 lines run at 1.544 Mbps and provide for 24 data channels. In common usage, the term "T1" is used interchangeably with "DS1."

T1 Link - A wideband digital carrier facility used for transmission of digitized voice, digital data, and digitized image traffic. This link is composed of two twisted-wire pairs that can carry 24 digital channels, each operating at 64K bps at the aggregate rate of 1.544M bps, full duplex. Also referred to as DS-1.

T3 - a specification for a transmission line, the equivalent of 28 T1 lines. T3 lines run at 44.736 Mbps. In common usage, the term "T3" is used interchangeably with "DS3."

Tachometer - in *ForeView*, the tachometer shows the level of activity on a given port. The number in the tachometer shows the value of a chosen parameter in percentage, with a colored bar providing a semi-logarithmic representation of that percentage.

Tagged Cell Rate (TCR) - An ABR service parameter, TCR limits the rate at which a source may send out-of-rate forward RM-cells. TCR is a constant fixed at 10 cells/second.

Telephony - The conversion of voices and other sounds into electrical signals which are then transmitted by telecommunications media.

Telnet - a TCP/IP protocol that defines a client/server mechanism for emulating directly-connected terminal connections.

Terminal Equipment (TE) - Terminal equipment represents the endpoint of ATM connection(s) and termination of the various protocols within the connection(s).

Throughput - Measurement of the total useful information processed or communicated by a computer during a specified time period, i.e. packets per second.

Time Division Multiplexing (TDM) - a method of traditional digital multiplexing in which a signal occupies a fixed, repetitive time slot within a higher-rate signal.

Token Ring - a network access method in which the stations circulate a token. Stations with data to send must have the token to transmit their data.

topology - a program that displays the topology of a FORE Systems ATM network. An updated topology can be periodically re-displayed by use of the interval command option.

Traffic - the calls being sent and received over a communications network. Also, the packets that are sent on a data network.

Traffic Management (TM) - The traffic control and congestion control procedures for ATM. ATM layer traffic control refers to the set of actions taken by the network to avoid congestion conditions. ATM layer congestion control refers to the set of actions taken by the network to minimize the intensity, spread and duration of congestion. The following functions form a framework for managing and controlling traffic and congestion in ATM networks and may be used in appropriate combinations:

Connection Admission Control
Feedback Control
Usage Parameter Control
Priority Control
Traffic Shaping
Network Resource Management
Frame Discard
ABR Flow Control

Traffic Parameter - A parameter for specifying a particular traffic aspect of a connection.

Trailer - the protocol control information located at the end of a PDU.

Transit Delay - the time difference between the instant at which the first bit of a PDU crosses one designated boundary, and the instant at which the last bit of the same PDU crosses a second designated boundary.

Transmission Control Protocol (TCP) - a specification for software that bundles and unbundles sent and received data into packets, manages the transmission of packets on a network, and checks for errors.

Transmission Control Protocol/Internet Protocol (TCP/IP) - a set of communications protocols that has evolved since the late 1970s, when it was first developed by the Department of Defense. Because programs supporting these protocols are available on so many different computer systems, they have become an excellent way to connect different types of computers over networks.

Transmission Convergence (TC) - generates and receives transmission frames and is responsible for all overhead associated with the transmission frame. The TC sublayer packages cells into the transmission frame.

Transmission Convergence Sublayer (TCS) - This is part of the ATM physical layer that defines how cells will be transmitted by the actual physical layer.

Transparent Asynchronous Transmitter/Receiver Interface (TAXI) - Encoding scheme used for FDDI LANs as well as for ATM; supports speed typical of 100 Mbps over multimode fiber.

Transport Layer - Layer Four of the OSI reference model that is responsible for maintaining reliable end-to-end communications across the network.

trap - a program interrupt mechanism that automatically updates the state of the network to remote network management hosts. The SNMP agent on the switch supports these SNMP traps.

Trivial File Transfer Protocol (TFTP) - Part of IP, a simplified version of FTP that allows files to be transferred from one computer to another over a network.

Twisted Pair - Insulated wire in which pairs are twisted together. Commonly used for telephone connections, and LANs because it is inexpensive.

Unassigned Cells - a generated cell identified by a standardized virtual path identifier (VPI) and virtual channel identifier (VCI) value, which does not carry information from an application using the ATM Layer service.

Unavailable Seconds (UAS) - a measurement of signal quality. Unavailable seconds start accruing when ten consecutive severely errored seconds occur.

UNI 3.0/3.1 - the User-to-Network Interface standard set forth by the ATM Forum that defines how private customer premise equipment interacts with private ATM switches.

Unicasting - The transmit operation of a single PDU by a source interface where the PDU reaches a single destination.

Universal Test & Operations Interface for ATM (UTOPIA) - Refers to an electrical interface between the TC and PMD sublayers of the PHY layer.

Unshielded Twisted Pair (UTP) - a cable that consists of two or more insulated conductors in which each pair of conductors are twisted around each other. There is no external protection and noise resistance comes solely from the twists.

Unspecified Bit Rate (UBR) - a type of traffic that is not considered time-critical (e.g., ARP messages, pure data), allocated whatever bandwidth is available at any given time. UBR traffic is given a “best effort” priority in an ATM network with no guarantee of successful transmission.

Uplink - Represents the connectivity from a border node to an upnode.

Usage Parameter Control (UPC) - mechanism that ensures that traffic on a given connection does not exceed the contracted bandwidth of the connection, responsible for policing or enforcement. UPC is sometimes confused with congestion management (see *congestion management*).

User Datagram Protocol (UDP) - the TCP/IP transaction protocol used for applications such as remote network management and name-service access; this lets users assign a name, such as “RVAX*2,S,” to a physical or numbered address.

User-to-Network Interface (UNI) - the physical and electrical demarcation point between the user and the public network service provider.

V.35 - ITU-T standard describing a synchronous, physical layer protocol used for communications between a network access device and a packet network. V.35 is most commonly used in the United States and Europe, and is recommended for speeds up to 48 Kbps.

Variable Bit Rate (VBR) - a type of traffic that, when sent over a network, is tolerant of delays and changes in the amount of bandwidth it is allocated (e.g., data applications).

Virtual Channel (or Circuit) (VC) - a communications path between two nodes identified by label rather than fixed physical path.

Virtual Channel Connection (VCC) - a unidirectional concatenation of VCLs that extends between the points where the ATM service users access the ATM Layer. The points at which the ATM cell payload is passed to, or received from, the users of the ATM Layer (i.e., a higher layer or ATMM-entity) for processing signify the endpoints of a VCC.

Virtual Channel Identifier (VCI) - the address or label of a VC; a value stored in a field in the ATM cell header that identifies an individual virtual channel to which the cell belongs. VCI values may be different for each data link hop of an ATM virtual connection.

Virtual Channel Link (VCL) - a means of unidirectional transport of ATM cells between the point where a VCI value is assigned and the point where that value is translated or removed.

Virtual Channel Switch - a network element that connects VCLs. It terminates VPCs and translates VCI values. The Virtual Channel Switch is directed by Control Plane functions and relays the cells of a VC.

Virtual Connection - an endpoint-to-endpoint connection in an ATM network. A virtual connection can be either a virtual path or a virtual channel.

Virtual Local Area Network (VLAN) - Work stations connected to an intelligent device which provides the capabilities to define LAN membership.

Virtual Network Software (VINES) - Banyan's network operating system based on UNIX and its protocols.

Virtual Path (VP) - a unidirectional logical association or bundle of VCs.

Virtual Path Connection (VPC) - a concatenation of VPLs between virtual path terminators (VPTs). VPCs are unidirectional.

Virtual Path Identifier (VPI) - the address or label of a particular VP; a value stored in a field in the ATM cell header that identifies an individual virtual path to which the cell belongs. A virtual path may comprise multiple virtual channels.

Virtual Path Link (VPL) - a means of unidirectional transport of ATM cells between the point where a VPI value is assigned and the point where that value is translated or removed.

Virtual Path Switch - a network element that connects VPLs, it translates VPI (not VCI) values and is directed by Control Plane functions. The Virtual Path Switch relays the cells of a Virtual Path.

Virtual Path Terminator (VPT) - a system that unbundles the VCs of a VP for independent processing of each VC.

Virtual Private Data Network (VPDN) - a private data communications network built on public switching and transport facilities rather than dedicated leased facilities such as T1s.

Virtual Private Network (VPN) - a private voice communications network built on public switching and transport facilities rather than dedicated leased facilities such as T1s.

Virtual Source/Virtual Destination (VS/VD) - An ABR connection may be divided into two or more separately controlled ABR segments. Each ABR control segment, except the first, is sourced by a virtual source. A virtual source implements the behavior of an ABR source endpoint. Backwards RM-cells received by a virtual source are removed from the connection. Each ABR control segment, except the last, is terminated by a virtual destination. A virtual destination assumes the behavior of an ABR destination endpoint. Forward RM-cells received by a virtual destination are turned around and not forwarded to the next segment of the connection.

Virtual Tributary (VT) - a structure used to carry payloads such as DS1s that run at significantly lower rates than STS-1s.

Warm Start Trap - an SNMP trap which indicates that SNMP alarm messages or agents have been enabled.

Wide-Area Network (WAN) - a network that covers a large geographic area.

Wideband Channel - Communications channel with more capacity (19.2K bps) than the standard capacity of a voice grade line.

X.21 - ITU-T standard for serial communications over synchronous digital lines. The X.21 protocol is used primarily in Europe and Japan.

X.25 - a well-established data switching and transport method that relies on a significant amount of processing to ensure reliable transport over metallic media.

Yellow Alarm - An alarm signal sent back toward the source of a failed signal due to the presence of an AIS (may be used by APS equipment to initiate switching).

Zero Byte Time Slot Interchange (ZBTSI) - A technique used with the T carrier extended superframe format (ESF) in which an area in the ESF frame carries information about the location of all-zero bytes (eight consecutive “0”s) within the data stream.

Zero Code Suppression - The insertion of a “1” bit to prevent the transmission of eight or more consecutive “0” bits. Used primarily with T1 and related digital telephone company facilities, which require a minimum “1’s density” in order to keep the individual subchannels of a multiplexed, high speed facility active.

Zero-Bit Insertion - A technique used to achieve transparency in bit-oriented protocols. A zero is inserted into sequences of one bits that cause false flag direction.

Index

A

AC power supply
- hot-swapping, *TNX*-1100 . . . . . 3 - 9
- hot-swapping, *TNX*-210 . . . . . 3 - 4
- *TNX*-1100 . . . . . 1 - 24
- *TNX*-210 . . . . . 1 - 20

Accessing menu choices on the SCP . . . . 1 - 11

Alarm relay contacts . . . . . 1 - 32, 1 - 40

Auto mode on the SCP . . . . . 1 - 11

B

BITS clock . . . . . 1 - 45
- Rx port pinouts . . . . . 1 - 47
- Tx port pinouts . . . . . 1 - 46

Board. See Switch fabric

Booting
- from Ethernet . . . . . 1 - 11
- from FLASH . . . . . 1 - 11

Bootp
- using to download software to the switch . . . . . 4 - 23

C

CEC-Plus . . . . . 1 - 37
- hardware overview . . . . . 1 - 39
- replacing . . . . . 3 - 20
- Timing Control Module (TCM) . . . . . 1 - 40

Checking the switch package . . . . . 2 - 2

Circuit Emulation Services (CES) network module
- CESDS1 specifications . . . . . .A - 23
- CESE1 specifications . . . . . .A - 25

Classical IP (CLIP)
- configuring . . . . . 2 - 18
- configuring ARP server . . . . . 2 - 19

Cleaning optical connectors . . . . . 3 - 3

Collision (COL) LED . . . . . 1 - 45

Common Equipment Card (CEC) . . . . . 1 - 31
- AL1 and AL2 . . . . . 1 - 32
- alarm relay contacts . . . . . 1 - 32
- Ethernet port . . . . . .1 - 34, 1 - 44
- front panel (*TNX*-1100) . . . . . 1 - 31
- LEDs . . . . . 1 - 34

Connection preservation. See PVC / PVP connection preservation

Connectors
- cleaning . . . . . 3 - 3

Contacting Technical Support ii

Control port . . . . . .1 - 10, 1 - 42
- pin locations . . . . . 1 - 42
- pinouts . . . . . 1 - 43

D

DC power supply
- hot-swapping, *TNX*-1100 . . . . . 3 - 11
- hot-swapping, *TNX*-210 . . . . . 3 - 6
- *TNX*-1100 . . . . . 1 - 27
- *TNX*-210 . . . . . 1 - 21

Digital input connections . . . . . 1 - 40

Display LED . . . . . .1 - 7, 1 - 11

Downloading
- with bootp . . . . . 4 - 24

DS1. See Network modules

Dual SCPs . . . . . 1 - 12
- configuring switchover . . . . . 4 - 14

Ethernet connection . . . . . 1 - 15
SCP heartbeat . . . . . 1 - 13

E

Ethernet
10BaseT port . . . . . 1 - 7, 1 - 9, 1 - 44
accessing mode on the SCP . . . . . 1 - 11
Ethernet IP
configuring . . . . . 2 - 17

F

Failover
support for dual SCPs . . . . . 1 - 12
timing support on the
CEC-Plus . . . . . 1 - 38
Fan tray . . . . . 1 - 30
fan tray
hot-swapping on a *TNX*-1100 . . . . 3 - 14
FLASH
booting from . . . . . 1 - 11
size on processors . . . . . 1 - 6
FORE IP
configuring . . . . . 2 - 17
FramePlus network module
IWFDS1 specifications . . . . . A - 27
IWFE1 specifications . . . . . A - 29
FTP
using to upgrade software . . . . . 4 - 12

H

Hardware
CEC-Plus . . . . . 1 - 39
specifications . . . . . A - 1
TNX-1100 . . . . . 1 - 3
TNX-210 . . . . . 1 - 2, 1 - 30
humidity
operating
TNX-1100 . . . . . A - 3
TNX-210 . . . . . A - 2
storage
TNX-1100 . . . . . A - 3
TNX-210 . . . . . A - 2

I

i960-based SCP . . . . . 1 - 6
Installation
verifying . . . . . 2 - 22
installation
TNX-1100 . . . . . 2 - 9
TNX-210 . . . . . 2 - 4
IP address
configuring . . . . . 2 - 15
configuring subnet mask . . . . . 2 - 17
IP routes
configuring . . . . . 2 - 20

L

LANE
configuring . . . . . 2 - 19
LEDs
network modules . . . . . 1 - 17
relay status . . . . . 1 - 42
SCP . . . . . 1 - 7
LIS. See Logical IP Subnet (LIS)
Local interface . . . . . 2 - 17
Logical IP Subnets (LIS) . . . . . 2 - 16

M

MAC address
displaying for an SCP . . . . . 1 - 11
Mini Loader upgrade
gateway addresses . . . . . 4 - 20
setting the switch IP address . . . . . 4 - 20
Modem configuration . . . . . 2 - 14
Monitor mode on the SCP . . . . . 1 - 11

N

Network module
- 155 Mbps UTP specifications . . . . . A - 15
- CESDS1 specifications . . . . . A - 23
- CESE1 specifications . . . . . A - 25
- cleaning optical connectors . . . . . 3 - 3
- DS1 (Series C and D) specifications . . . . . A - 8
- DS3 (Series C and D) specifications . . . . . A - 10
- E1 (Series C and D) specifications . . . . . A - 11
- E3 (Series C and D) specifications . . . . . A - 14
- *FramePlus* IWFDS1 specifications . . . . . A - 27
- *FramePlus* IWFE1 specifications . . . . . A - 29
- hot-swapping . . . . . 3 - 2
- J2 specifications . . . . . A - 13
- LED indicators . . . . . 1 - 17
- OC-12c multimode specifications . . . . . A - 19
- OC-12c / STM-4c (Series C, LC, and D) single mode specifications . . . . . A - 20
- OC-3c multimode specifications . . . . . A - 17
- OC-3c / STM-1 (Series C and D) mixed mode specifications . . . . . A - 21
- OC-3c / STM-1 (Series C, LC, and D) single mode specifications . . . . . A - 18
- port numbering . . . . . 1 - 16
- TAXI specifications
  - TAXI . . . . . A - 4
- TP25 specifications . . . . . A - 5

NEXT pushbutton . . . . . 1 - 7, 1 - 10, 1 - 42

O

Optical connector
- cleaning . . . . . 3 - 3

Options mode on the SCP . . . . . 1 - 11

Overcurrent protection . . . . . 2 - 3

P

Pentium-based SCP . . . . . 1 - 6

Pin locations
- control port . . . . . 1 - 42
- relay / input connector . . . . . 1 - 41

Pinouts
- BITS Rx port . . . . . 1 - 46
- BITS Tx port . . . . . 1 - 47
- control port . . . . . 1 - 43
- relay / input connector . . . . . 1 - 41
- serial port . . . . . 1 - 8, 1 - 9

Polarity (POL) LED . . . . . 1 - 45

Port numbering . . . . . 1 - 16

Power LED . . . . . 1 - 7, 1 - 12

PVC / PVP connection preservation . . . . . 1 - 13

R

rack-mounting
- *TNX*-1100 . . . . . 2 - 10
- *TNX*-210 . . . . . 2 - 5

Receive (RX) LED . . . . . 1 - 44

Receive (Rx) port
- BITS clock . . . . . 1 - 45

Relay status LEDs . . . . . 1 - 42

Relay / input connectors on the CEC-Plus TCM . . . . . 1 - 40

RESET button . . . . . 1 - 7, 1 - 8, 1 - 45

RS-232 serial port . . . . . 1 - 7, 1 - 8, 1 - 42

S

SCP and switch compatibility . . . . . 1 - 7

SCP. See Switch Control Processor (SCP)

SELECT pushbutton . . . . . 1 - 7, 1 - 10, 1 - 42

Serial port . . . . . 1 - 7
cable installation . . . . . .2 - 6, 2 - 10
pinouts on i960 SCP . . . . . 1 - 8
pinouts on Pentium SCP . . . . . 1 - 8
ShowMac mode on the SCP . . . . . 1 - 11
Software
overview of downloading with bootp . . . . . 4 - 24
Software upgrade . . . . . 4 - 1
/etc/services . . . . . 4 - 27
adding a switch entry . . . . . 4 - 25
downloading Mini Loader . . . . . 4 - 6
emptying the FLASH . . . . . 4 - 6
inetd.conf . . . . . 4 - 27
obtaining the upgrade via FTP . . . . 4 - 2
on a standby SCP . . . . . 4 - 14
placing the upgrade file . . . . . 4 - 9
requirements . . . . . 4 - 2
requirements for Mini Loader . . . . . 4 - 5
setting up a bootp server . . . . . 4 - 24
setting up a TFTP server . . . . . 4 - 27
tftpboot directory . . . . . 4 - 27
upgrading to Mini Loader . . . . . 4 - 6
using FTP . . . . . 4 - 12
using TFTP . . . . . 4 - 9
Status LED . . . . . 1 - 43
switch board
hot-swapping on a *TNX*-1100 . . . . 3 - 18
Switch Control Processor (SCP) . . . . . 1 - 6
control port . . . . . 1 - 10
display LED . . . . . .1 - 7, 1 - 11
dual configuration . . . . . 1 - 12
Ethernet port . . . . . 1 - 7
hot-swapping . . . . . 3 - 15
i960-based . . . . . 1 - 6
NEXT pushbutton . . . . . 1 - 7
Pentium-based . . . . . 1 - 6
power LED . . . . . .1 - 7, 1 - 12
RESET button . . . . . 1 - 7
SELECT pushbutton . . . . . 1 - 7
serial port . . . . . 1 - 7
Switch fabric . . . . . 1 - 4
Switch software
changing between versions . . . . . 4 - 15
changing the current version . . . . 4 - 15
displaying current version . . . . . 4 - 15
switch specifications
TNX-1100 . . . . . .A - 3

T

TCM hardware. See CEC-Plus
Technical Support ii
Temperature
sensors on switch board . . . . . 1 - 30
temperature
operating
TNX-1100 . . . . . .A - 3
TNX-210 . . . . . .A - 2
storage
TNX-1100 . . . . . .A - 3
TNX-210 . . . . . .A - 2
Timing
failover . . . . . 1 - 38
TNX-1100
DC power supply . . . . . 1 - 27
installation . . . . . 2 - 9
rack-mounting . . . . . 2 - 10
TNX-210
rack-mounting . . . . . 2 - 5
Transmit (Tx) port
BITS clock . . . . . 1 - 45

U

Unpacking . . . . . 2 - 2
Upgrading software. See Software upgrade