ForeRunner™ SBA-200E ATM SBus Adapter User's Manual

MANU0069-01 - April, 1997

Software Version 4.1

FORE Systems, Inc.

174 Thorn Hill Road
Warrendale, PA 15086-7535
Phone: 412-772-6600
FAX: 412-772-6500

http://www.fore.com/

Legal Notices

Copyright © 1995-1996 FORE Systems, Inc. All rights reserved. FORE Systems is a registered trademark, and *ForeRunner, ForeThought, ForeView, PowerHub,* and *CellPath* are trademarks of FORE Systems, Inc. All other brands or product names are trademarks or registered trademarks of their respective holders.

U.S. Government Restricted Rights. If you are licensing the Software on behalf of the U.S. Government ("Government"), the following provisions apply to you. If the Software is supplied to the Department of Defense ("DoD"), it is classified as "Commercial Computer Software" under paragraph 252.227-7014 of the DoD Supplement to the Federal Acquisition Regulations ("DFARS") (or any successor regulations) and the Government is acquiring only the license rights granted herein (the license rights customarily provided to non-Government users). If the Software is supplied to any unit or agency of the Government other than DoD, it is classified as "Restricted Computer Software" and the Government's rights in the Software are defined in paragraph 52.227-19 of the Federal Acquisition Regulations ("FAR") (or any successor regulations) or, in the cases of NASA, in paragraph 18.52.227-86 of the NASA Supplement to the FAR (or any successor regulations).

Printed in the USA.

No part of this work covered by copyright may be reproduced in any form. Reproduction, adaptation, or translation without prior written permission is prohibited, except as allowed under the copyright laws.

This publication is provided by FORE Systems, Inc. "as-is" without warranty of any kind, either express or implied, including, but not limited to, the implied warranties or conditions of merchantability or fitness for a particular purpose. FORE Systems, Inc. shall not be liable for any errors or omissions which may occur in this publication, nor for incidental or consequential damages of any kind resulting from the furnishing, performance, or use of this publication.

Information published here is current or planned as of the date of publication of this document. Because we are improving and adding features to our products continuously, the information in this document is subject to change without notice.

RESTRICTED RIGHTS LEGEND. Use, duplication, or disclosure by the government is subject to restrictions as set forth in subparagraph (c)(1)(ii) of the Rights in Technical Data and Computer Software clause at DFARS 252.227-7013 (October 1988) and FAR 52.227-19 (June 1987).

FCC CLASS A NOTICE

WARNING: Changes or modifications to this unit not expressly approved by the party responsible for compliance could void this user's authority to operate this equipment.

NOTE: The SBA-200E has been tested and found to comply with the limits for a Class A digital device, pursuant to Part 15 of the FCC Rules. These limits are designed to provide reasonable protection against harmful interference when the equipment is operated in a commercial environment. This equipment generates, uses, and can radiate radio frequency energy and, if not installed and used in accordance with the instruction manual, may cause harmful interference to radio communications. Operation of the equipment in a residential area is likely to cause harmful interference in which case the user will be required to correct the interference at his own expense.

DOC CLASS A NOTICE

This digital apparatus does not exceed Class A limits for radio noise emission for a digital device as set out in the Radio Interference Regulations of the Canadian Department of Communications.

Le present appareil numerique n'emet pas de bruits radioelectriques depassant les limites applicables aux appareils numeriques de la class A prescrites dans le reglement sur le brouillage radioelectrique edicte par le ministere des Communications du Canada.

VCCI CLASS 1 NOTICE

この装置は、第一種情報処理装置（商工業地域において使用されるべき情報処理装置）で商工業地域での電波障害防止を目的とした情報処理装置等電波障害自主規制協議会(VCCI)基準に適合しております。
従って、住宅地域またはその隣接した地域で使用すると、ラジオ、テレビジョン受信機等に受信障害を与えることがあります。
取扱説明書に従って正しい取り扱いをして下さい。

This equipment is in the Class 1 category (Information Technology Equipment to be used in commercial and/or industrial areas) and conforms to the standards set by the Voluntary Control Council For Interference by Information Technology Equipment aimed at preventing radio interference in commercial and/or industrial areas.Consequently, when used in a residential area or in an adjacent area thereto, radio interference may be caused to radios and TV receivers, etc. Read the instructions for correct handling.

CE *NOTICE*

Marking by the symbol **CE** indicates compliance of this system to the EMC (Electromagnetic Compatibility) directive of the European Community and compliance to the Low Voltage (Safety) Directive. Such marking is indicative that this system meets or exceeds the following technical standards:

- EN 55022 - "Limits and Methods of Measurement of Radio Interference Characteristics of Information Technology Equipment."
- EN 50082-1 - "Electromagnetic compatibility - Generic immunity standard Part 1: Residential, commercial, and light industry."
- IEC 1000-4-2 - "Electromagnetic compatibility for industrial-process measurement and control equipment Part 2: Electrostatic discharge requirements."
- IEC 1000-4-3 - "Electromagnetic compatibility for industrial-process measurement and control equipment Part 3: Radiate electromagnetic field requirements."
- IEC 1000-4-4 - "Electromagnetic compatibility for industrial-process measurement and control equipment Part 4: Electrical fast transient/burst requirements."

SAFETY CERTIFICATIONS

ETL certified to meet Information Technology Equipment safety standards UL 1950, CSA 22.2 No. 950, and EN 60950.

TRADEMARKS

FORE Systems is a registered trademark, and *ForeRunner*, *ForeThought*, and *ForeView* are trademarks of FORE Systems, Inc. All other brands or product names are trademarks or registered trademarks of their respective holders.

Table of Contents

Preface

Chapter Summaries ii
Technical Support iii
Typographical Styles iv
Important Information Indicators v
Safety Agency Compliance vi
Safety Precautions vi
Modifications to Equipment vi

CHAPTER 1 Introduction

1.1 Overview of the ATM Standard 1-1
1.2 Overview of LAN Emulation 1-2
1.2.1 The ELAN Components 1-2
1.2.2 An Example Configuration 1-3
1.2.3 The Initialization Process 1-4
1.2.4 The Connection Process 1-4
1.2.4.1 Multicast and Broadcast Packets 1-5
1.2.4.2 Accessing Fast Ethernet and FDDI Networks 1-5
1.2.5 Multiple ELANs 1-5
1.2.6 Failover ELANs 1-5
1.2.7 Automatic ELAN Selection 1-5
1.2.8 Intelligent BUS 1-6
1.3 The ForeRunner SBA-200E Adapter 1-7
1.4 Hardware Overview 1-8
1.5 Software Overview 1-9
1.5.1 SBA-200E Advanced Cell Processor Architecture 1-10
1.5.2 Software Features 1-10
1.6 Hardware Requirements 1-11
1.6.1 SBA-200E Supported Platforms 1-11
1.7 Software Requirements 1-11
1.8 Unpacking Information 1-12
1.9 SBA-200E Technical Specifications 1-13
1.10 Cable Specifications 1-15
1.11 Product Registration Information 1-16

CHAPTER 2 Hardware Installation

2.1 General Installation Procedures 2-1
2.1.1 Halting the System 2-2
2.1.2 Opening the System Unit 2-3
2.1.3 Installing the SBA-200E Adapter 2-4
2.2 SBA Post-Installation Test 2-5

CHAPTER 3 Software Installation and Kernel Configuration

3.1 SBA-200E Software Installation Requirements 3-1
3.2 Software Installation and Configuration 3-2
3.2.1 Before You Begin 3-2
3.2.1.1 Temporary Configuration 3-2
3.2.2 Software Installation for SunOS Systems 3-4
3.2.3 Kernel Configuration for SunOS 3-6
3.2.3.1 Typical Configuration Session 3-6
3.2.3.2 Configuration Script Questions and Responses for SunOS . . . 3-14
3.2.4 Kernel Verification 3-24
3.2.5 Software Installation for Solaris Systems 3-25
3.2.6 Driver Configuration for Solaris 3-27
3.2.6.1 Typical Configuration Session 3-27
3.2.6.2 Configuration Script Questions and Responses for Solaris . . . 3-32
3.3 System Reconfiguration for Solaris 3-40
3.4 Changing Buffer Space 3-41
3.4.1 Send Buffer 3-41
3.4.2 Receive Buffer 3-41

CHAPTER 4 Network Interface Administration

4.1 Network Interface Configuration 4-1
4.1.1 Network Interface Naming Conventions 4-2
4.1.2 Bringing up the SBA-200E Network Interface 4-2
4.1.3 Assigning IP Addresses During Reboots 4-3
4.2 SBA-200E Adapter in an Internet Protocol Network 4-4
4.2.1 Multi-homing on ATM and Ethernet Networks 4-5
4.2.2 Configuring a Workstation as ATM-Only 4-6
4.2.3 Dynamic and Static IP Routing (ATM-Only Network) 4-7
4.2.3.1 Dynamic Routing 4-7
4.2.3.2 Static Routing 4-7
4.2.4 Disabling Signalling 4-8
4.2.5 Configuring an Outgoing IP PVC 4-10
4.2.6 Configuring an Incoming IP PVC 4-11
4.2.7 Verifying the PVC Configuration 4-12

4.2.8 IP Multicasting Support 4-12
4.2.9 IP Load Balancing and Automatic Failover across Multiple Adapters. . . 4-13
4.2.10 Settable Peak Cell Rate for FORE IP SVCs 4-14
4.2.11 MTU Size 4-15
4.2.12 User Configurable ATM Network Interface Name. 4-15
4.3 atmarp(8c) 4-16
4.4 atmconfig(8c) 4-20

CHAPTER 5 Configuring a Classical IP ATM Network

5.1 Introduction. 5-1
5.1.1 Logical IP Subnets 5-2
5.1.2 Classical IP Interfaces 5-2
5.1.3 SPANS Interface. 5-3
5.2 Address Registration and ILMI 5-4
5.2.1 ATM Addresses 5-4
5.2.2 Operating with ILMI Support. 5-5
5.2.3 Operating without ILMI Support 5-5
5.2.4 Configuration 5-5
5.3 ARP and ARP Servers 5-6
5.3.1 Theory 5-6
5.3.2 Configuring a FORE Switch to be an ARP Server 5-7
5.3.3 Configuring a Host to be an ARP Server 5-7
5.3.4 Classical IP Operation 5-8
5.3.5 Operational Issues 5-9
5.4 Classical IP PVCs. 5-10
5.4.1 Theory and Configuration. 5-10
5.4.2 Revalidation and Removal 5-10
5.5 Debugging 5-11
5.6 Configuring the Network. 5-12
5.6.1 Third-Party Host with No ILMI and No RFC-1577 Support 5-13
5.6.2 Third-Party Switch with ILMI Support. 5-14
5.6.3 Third-Party Switch with RFC-1577 and No ILMI Support. 5-15

CHAPTER 6 Configuring an Emulated LAN

6.1 Introduction. 6-1
6.2 Emulated LAN Components 6-2
6.2.1 LAN Emulation Client (LEC). 6-3
6.2.2 LAN Emulation Configuration Server (LECS). 6-3
6.2.3 LAN Emulation Server (LES) 6-3
6.2.4 Broadcast and Unknown Server (BUS) 6-3

6.3 Emulated LAN Operation 6-4
6.3.1 Initialization 6-6
6.3.2 Registration and Address Resolution 6-6
6.3.3 Data Transfer 6-7
6.4 Configuring an ELAN 6-8
6.4.1 Using the **configure_lanem** Script 6-8
6.4.1.1 **configure_lanem** Script Questions and Responses 6-11
6.4.2 Manual ELAN Configuration and Administration 6-16
6.4.2.1 Configuring an LECS Configuration File 6-17
6.4.2.2 Sample LECS Configuration File 6-24
6.4.2.3 The Default LECS Configuration File 6-27
6.4.2.4 Administering LAN Emulation Services 6-28
6.4.2.5 Administering LECs using the **elconfig** Command 6-30
6.4.2.6 Using **elarp** 6-33
6.4.2.7 Using **leq** 6-34
6.4.2.8 Using **lestat** 6-36

CHAPTER 7 ATM Network Configurations

7.1 Back-to-Back Adapter Configuration 7-1
7.1.1 SPANS Signalling 7-1
7.2 Adapter-to-FORE ATM Switch Configuration 7-2
7.3 Adapter-to-Other Vendor's Equipment Configuration 7-3

CHAPTER 8 Additional Administration Information

8.1 Additional Software and Manual Pages 8-1
8.2 SBA-200E Administrative Programs 8-2
8.2.1 elarp(8c) 8-5
8.2.2 elconfig(8c) 8-7
8.2.3 le(8c) 8-9
8.2.4 lecs(8c) 8-11
8.2.5 lecs.cfg 8-13
8.2.6 lane 8-19
8.2.7 leq 8-22
8.2.8 lestat(8c) 8-24

CHAPTER 9 Software Interfaces

9.1 Berkeley Socket Interface 9-1
9.2 Application Programming Interface 9-1
9.2.1 Concurrent Server Model for the API 9-1
9.3 Rate Control 9-2

9.4 Support for Network Maintenance 9-2
9.4.1 Support for BPF and NIT 9-2
9.4.2 Data Link Provider Interface 9-3
9.5 AAL NULL Support 9-4

CHAPTER 10 Troubleshooting

10.1 Adapter Hardware Troubleshooting 10-1
10.1.1 Run Looptest 10-3
10.1.2 Check Self-Test (Automatically Performed) 10-4
10.1.3 Firmware Download (Automatically Performed) 10-4
10.1.4 Hardware Detected by Driver 10-5
10.1.5 Check Firmware 10-6
10.1.6 Check Physical Link 10-7
10.2 Testing Network Connectivity Using PVCs 10-8
10.2.1 Verifying the Outgoing ATM ARP Entry 10-11
10.2.2 atmstat 10-12
10.2.2.1 No Cells Received by Remote End 10-12
10.2.2.2 Cells and VPI/VCI Errors Received by Remote 10-13
10.2.2.3 Cells and AAL* Errors Received by Remote 10-13
10.2.2.4 Cells and No Errors Received by Remote and Transmitting No Cells 10-13
10.2.2.5 Cells and No Errors Received by Remote and Transmitting Cells 10-14
10.3 LAN Emulation Troubleshooting 10-15
10.3.1 Troubleshooting Procedures 10-15
10.4 Collecting Additional Information 10-19
10.4.1 Basic Information 10-19
10.4.2 Adapter Information 10-19
10.4.3 Switch Information 10-22

APPENDIX A PMD LED Indicators

A.1 LED Location A-1
A.2 LED Descriptions A-2

APPENDIX B Diagnostics

B.1 Features B-1
B.1.1 Invoking the Program B-1
B.1.2 Low-Level Tests B-4

APPENDIX C LAN Emulation Services Console Messages

C.1 Listing Conventions C-1

C.2 **le** Program Messages C-2

C.3 **lecs** Program Messages C-7

Acronyms

Glossary

Index

List of Figures

CHAPTER 1 Introduction

Figure 1.1 An Example of an ELAN 1-3
Figure 1.2 SBA-200E Adapter Card. 1-8
Figure 1.3 SBA Software Architecture 1-9

CHAPTER 2 Hardware Installation

Figure 2.1 Typical System Unit Card Locations 2-3

CHAPTER 3 Software Installation and Kernel Configuration

CHAPTER 4 Network Interface Administration

Figure 4.1 Multi-homing Network Configuration. 4-5
Figure 4.2 ATM Network with Access to Ethernet 4-6
Figure 4.3 IP Permanent Virtual Circuit 4-10

CHAPTER 5 Configuring a Classical IP ATM Network

Figure 5.1 Configuring a Third-Party Host with No ILMI and No RFC-1577 Support. 5-13
Figure 5.2 Configuring a Third-Party Switch with ILMI Support. 5-14
Figure 5.3 Configuring a Third-Party Switch with RFC-1577 and No ILMI Support 5-15

CHAPTER 6 Configuring an Emulated LAN

Figure 6.1 Basic Emulated LAN Interconnections 6-2
Figure 6.2 ELAN Operation 6-5
Figure 6.3 Default LECS Configuration File 6-27

CHAPTER 7 ATM Network Configurations

Figure 7.1 Back-to-Back Configuration with SPANS Signalling 7-1
Figure 7.2 Minimum Configuration with UNI 3.0 or UNI 3.1 Signalling 7-2
Figure 7.3 Adapter-to-Other Vendor Configuration 7-3

CHAPTER 8 Additional Administration Information

CHAPTER 9 Software Interfaces

CHAPTER 10 Troubleshooting

Figure 10.1 Adapter Hardware Troubleshooting Flowchart. 10-2
Figure 10.2 Hardware Configuration for Checking PVCs 10-8
Figure 10.3 Networking Connectivity Using PVCs 10-9

APPENDIX A PMD LED Indicators

Figure A.1 ST Connector Face Plate Configuration A-1
Figure A.2 SC Connector Face Plate Configuration A-1

APPENDIX B Diagnostics

APPENDIX C LAN Emulation Services Console Messages

Preface

The intent of this manual is to supply users of the *ForeRunner*™ SBA-200E ATM SBus adapters with all the necessary information to install an SBA-200E and its accompanying software successfully. This manual also provides general product information, network configuration information and information on software administration capabilities. This manual was created for users with various levels of experience. Read the procedures contained herein carefully before attempting to perform them. If you have any questions or problems with installation or configuration, please contact FORE Systems' Technical Support.

Chapter Summaries

Chapter 1 - Introduction - Provides an overview of ATM, an SBA-200E adapter hardware and software overview, and general information to prepare for the installation of SBA-200E adapter cards.

Chapter 2 - Hardware Installation - Guides you through the installation of an SBA-200E. Included are hardware installation instructions, a test to verify the proper installation of the adapter card, and product registration information.

Chapter 3 - Software Installation and Kernel Configuration - Contains the requirements and instructions for the installation of the SBA-200E adapter card software for the SunOS and Solaris operating systems. Also contains kernel configuration and verification information.

Chapter 4 - Network Interface Administration - Provides network configuration information such as assigning an IP address, configuring a workstation as a multi-homed or ATM-only workstation, and the dynamic and static IP routing information for an ATM-only network.

Chapter 5 - Configuring a Classical IP ATM Network - Discusses how to integrate ATM into legacy LANs.

Chapter 6 - Configuring an Emulated LAN - Provides information on the methods for configuring emulated LANs.

Chapter 7 - ATM Network Configurations - Contains examples of various physical configurations for the SBA-200E.

Chapter 8 - Additional Administration Information - Provides information about administration commands and programs, and on-line manual pages.

Chapter 9 - Software Interfaces - Provides information about software interfaces supported by the SBA-200E device driver.

Chapter 10 - Troubleshooting - Provides information about tests that can isolate and locate possible problems.

Appendix A - PMD LED Indicators - Describes the physical and functional capabilities of the PMD module LED indicators.

Appendix B - Diagnostics - Provides information about the ATM diagnostics program.

Appendix C - LAN Emulation Services Console Messages - Provides information on the console messages that may appear while running the LAN Emulation Services.

Technical Support

In the U.S.A., you can contact FORE Systems' Technical Support by any one of four methods:

1. If you have access to Internet, you may contact FORE Systems' Technical Support via E-Mail at the following Internet address:

   support@fore.com

2. You may FAX your questions to:

   412-933-3416

3. You may send questions, via U S Mail, to the following address:

   FORE Systems, Inc.
   1000 FORE Drive
   Warrendale, PA 15086

4. You may telephone your questions to:

   800-671-FORE or 412-635-3700

Technical support for non-U.S.A. customers should be handled through your local distributor.

No matter which method is used for contacting Technical Support, please be prepared to provide your support contract ID number, the serial number(s) of the product(s), and as much information as possible describing your problem / question.

Typographical Styles

Throughout this manual, specific commands to be entered by the user appear on a separate line in bold typeface. In addition, use of Enter or Return keys is represented as **<ENTER>**. The following example demonstrates this convention:

`cd /usr <ENTER>`

Commands, menu items, and file names that appear within the text of this manual appear in **`bold Courier`** font. For example: "...the **`atmarp`** command shows a user the current connections to the adapter as well as the ATM address."

Any messages appearing on your screen during software installation and network interface administration will appear in the `Courier` font to distinguish them from the rest of the text. For example:

```
.... Are all three conditions true?
```

Important Information Indicators

To call your attention to safety and otherwise important information that must be reviewed to insure correct and complete installation, as well as to avoid damage to the adapter or your system, FORE Systems utilizes the following *WARNING/CAUTION/NOTE* indicators.

WARNING statements contain information that is critical to the safety of the operator and/or the system. Do not proceed beyond a ***WARNING*** statement until the indicated conditions are fully understood or met. This information could prevent serious injury to the operator and damage to the adapter, the system, or currently loaded software, and will be indicated as:

WARNING!

Hazardous voltages are present. To lessen the risk of electrical shock and danger to personal health, follow the instructions carefully.

Information contained in **CAUTION** statements is important for proper installation/operation. Compliance with **CAUTION** statements can prevent possible equipment damage and/or loss of data and will be indicated as:

CAUTION

You risk damaging your equipment and/or software if you do not follow these instructions.

Information contained in **NOTE** statements has been found important enough to be called to the special attention of the operator and will be set off from the text as follows:

Steps 1, 3, and 5 are similar to the installation for the computer type above. Review the previous installation procedure before installation in your particular model.

Safety Agency Compliance

This preface provides safety precautions to follow when installing a FORE Systems, Inc., product.

Safety Precautions

For your protection, observe the following safety precautions when setting up your equipment:

- Follow all warnings and instructions marked on the equipment.
- Ensure that the voltage and frequency of your power source matches the voltage and frequency inscribed on the equipment's electrical rating label.
- Never push objects of any kind through openings in the equipment. Dangerous voltages may be present. Conductive foreign objects could produce a short circuit that could cause fire, electric shock, or damage to your equipment.

Modifications to Equipment

Do not make mechanical or electrical modifications to the equipment. FORE Systems, Inc., is not responsible for regulatory compliance of a modified FORE product.

CHAPTER 1 Introduction

This chapter provides an overview of the ATM Standard and the FORE Systems' SBA-200E adapter. It details the hardware and software requirements necessary to use the SBA-200E and also provides information on the contents of the SBA-200E package.

1.1 Overview of the ATM Standard

Asynchronous Transfer Mode, or ATM, is a communication architecture based on the switching of small fixed length packets of data called *cells*. In ATM, all data is transferred in 53-byte cells. Each cell has a 5-byte header that identifies the cell's route through the network and 48-bytes containing user data. This user data, in turn, carries any headers or trailers required by higher level protocols.

Perhaps the single most important advantage offered by ATM, in addition to data transfer speed, is its open-ended growth path. ATM is not locked into a single physical medium or speed. The fixed-size ATM cell allows traffic from multiple sources (simultaneous video, audio, and data communication) to be switched to multiple destinations by fast ATM switches. For example, a *ForeRunner* ASX-1000 ATM Switch can connect up to 96 users and has an aggregate capacity of 10 gigabits per second. Larger LANs can be built by interconnecting multiple *ForeRunner* ATM switches.

1.2 Overview of LAN Emulation

FORE System's *ForeThought* 4.1 LAN Emulation (LANE) software is compliant with the ATM Forum's *LAN Emulation Over ATM Version 1.0* specification. LAN Emulation allows higher level protocols and LAN applications to interoperate, without modifications, with an ATM network. The LANE components, running on the ATM network, work together to emulate an Ethernet or Token Ring LAN. This emulated Ethernet or Token Ring LAN is called an *emulated LAN (ELAN).* The ELAN components resolve MAC addresses to ATM addresses, replace the connectionless operation of legacy LANs with point-to-point connections, and provide broadcast and multicast services. The ELAN consists of a LAN Emulation Client (LEC) running on each host in the ELAN, and the following LANE Services:

- the LAN Emulation Server (LES)
- the Broadcast and Unknown Server (BUS)
- the LAN Emulation Configuration Server (LECS)

In *ForeThought* 4.1, the LANE services operate on a FORE Systems switch or SunOS or Solaris workstation. *ForeThought* 4.1 uses UNI 3.0 or 3.1 signalling.

In order to understand *ForeThought* 4.1, it is important to understand how these components work together to provide LAN Emulation.

1.2.1 The ELAN Components

The ELAN includes a number of components:

LAN Emulation Client (LEC) Runs on each end station in the ELAN. Communicates with other ELAN components (the LES and BUS) to resolve MAC addresses into ATM addresses.

LAN Emulation Configuration Server (LECS) Runs on a SunOS or Solaris workstation or in a FORE Systems switch. Maintains information about all ELANs within the administrative domain. When the LEC successfully communicates with the LECS, the LECS provides a list of ELANs which the LEC can join.

LAN Emulation Server (LES) Runs on a SunOS or Solaris workstation or in a FORE Systems switch. Maintains information about the LECs within a single ELAN and performs address resolution.

Broadcast and Unknown Server (BUS) Runs on a SunOS or Solaris workstation or in a FORE Systems switch. Provides services within a single ELAN allowing broadcasts, multicast, and unknown unicasts.

1.2.2 An Example Configuration

Figure 1.1 shows an example configuration of a single ELAN in a FORE network. The ELAN includes:

- Workstations (PCs, Macintoshes, and UNIX boxes) running a LEC. Each has a *ForeRunner* ATM adapter, the *ForeRunner* driver for the adapter, and one or more *ForeRunner* ELAN drivers installed.
- Two ASX-200 switches running LECs. One switch is also running the LECS, the LES, and the BUS.
- A Powerhub 7000 running a LEC, and providing access to non-ATM networks.

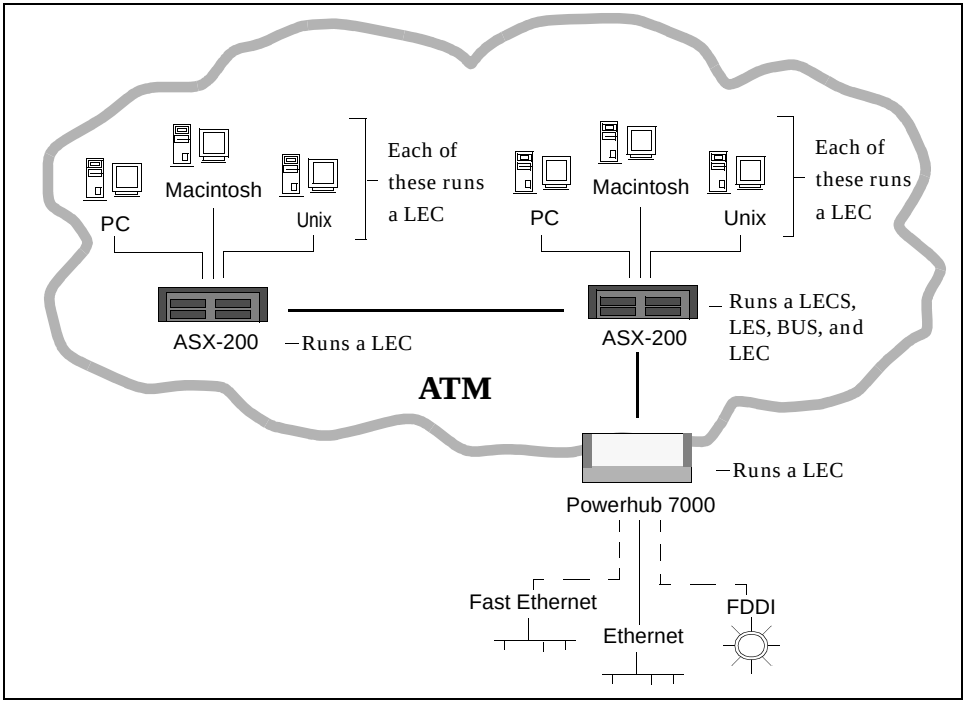

Figure 1.1 - An Example of an ELAN

1.2.3 The Initialization Process

The LEC running on the workstation goes through the following process when it starts up:

1. The LEC obtains its own ATM address via address registration.

   Optionally, you can manually specify the ATM address when you install the *ForeRunner* ATM adapter driver.

2. The LEC establishes a connection to the LECS using a well-known address or the Permanent Virtual Circuit (0,17).

   Optionally, you can manually specify the address of the LECS when you install the *ForeRunner* ELAN driver.

3. The LEC requests the information necessary to join a specified ELAN or the default ELAN. The LECS has information about available ELANs, what ELANs each LEC can join, and which ELAN the LEC should attempt to join first.

   If the LECS is not available, or if you choose not to use it, you can manually specify the information required to join a specific ELAN.

4. The LEC contacts the LES associated with the ELAN it wants to join and registers its MAC-NSAP address pair. It also contacts the BUS associated with the ELAN. At this point, the LEC and the LES have the information required to allow this host to communicate with other hosts on the ELAN as if it were an Ethernet (or Token-Ring) network. Refer to the following section for a description of how the LEC connects to other hosts on the ELAN.

1.2.4 The Connection Process

To send packets to another host on the ELAN:

1. The LEC calls the LES to map the MAC destination address into an ATM NSAP address. (The LES maintains a mapping table of the address of all LECs on the ELAN.)
2. If the LES finds an entry in its table for the destination MAC address, it returns the destination NSAP address to the LEC.
3. The LEC then opens up a point-to-point ATM connection to the destination host to send the packet.

1.2.4.1 Multicast and Broadcast Packets

The LEC sends outgoing multicast and broadcast packets to the BUS which uses a point-to-multipoint connection to send the packets to multiple NSAP addresses in the ELAN.

1.2.4.2 Accessing Fast Ethernet and FDDI Networks

Note that the diagram in Figure 1.1 shows dotted lines from the Powerhub 7000 to the Fast Ethernet and FDDI networks. This is because the Powerhub does not use bridging to reach these networks but must route to them.

1.2.5 Multiple ELANs

It is possible to set up more than one ELAN in a FORE network. For each new ELAN, you must configure another LES and BUS instance for that LAN. On the access devices, bridge groups must be used to associate physical ports with ELANs on the ATM side.

An end station in the ELAN with a *ForeRunner* adapter can connect to up to 16 ELANs simultaneously.

1.2.6 Failover ELANs

To ensure that a single service failure does not cripple the entire ELAN, *ForeThought* 4.1 supports a simple failover mechanism. Rather than associating a single LES and BUS pair with a single ELAN, the LEC maintains an ordered list of LES and BUS pairs for each ELAN. While the LEC is only interacting with one LES at a time, it is ready to move to the next LES and BUS in the list if the current LES fails. If it is using a backup LES and BUS pair, the LEC will periodically check if the primary LES and BUS pair in the failover sequence is again available. If it is, the LEC resumes the connection to the original pair.

1.2.7 Automatic ELAN Selection

To simplify configuration of the ELAN, *ForeThought* 4.1 allows a host to join an ELAN without specifying an ELAN name. If the LECS has been configured to provide the required information, and you do not manually specify an ELAN name to join when you configure the ELAN driver, the host initially attempts to join the ELAN specified by the LECS.The host successfully joins the ELAN if the LECS is available, the proper LES address for the ELAN has been specified in the LECS, and the LES and BUS are available.

Only one ELAN driver can use automatic ELAN selection. When configuring other ELAN drivers, you must specify the ELAN name.

1.2.8 Intelligent BUS

This feature reduces broadcast traffic by using the MAC address information in the LES. When an intelligent BUS receives a unicast frame, the BUS first checks the LES's mapping table to see if the MAC address is registered there. If it is, the BUS routes the frame directly to the destination, instead of broadcasting.

1.3 The *ForeRunner* SBA-200E Adapter

The SBA-200E is a high performance adapter designed for use in a Sun SPARCstation or SPARCserver. The SBA-200E adapter provides ATM connectivity for the host systems, and is able to support evolving signalling and AAL standards. The adapter features FORE Systems' Advanced Cell Processing architecture, providing maximum network performance to all running applications. In addition, the SBA-200E provides transparent support for TCP/IP, Switched Virtual Circuits (SVCs) through the SPANS and UNI 3.0 or 3.1 signalling protocols, Permanent Virtual Circuits (PVCs), Classical IP, LAN emulation, an ATM Applications Programmer Interface (API), and an SNMP agent for network management.

The SBA-200E supports high-quality image, full-motion video, CD-quality audio, and high speed data communications over a single ATM network connection. Each physical connection in an ATM LAN is a point-to-point link between switches and/or hosts.

1.4 Hardware Overview

The SBA-200E features FORE's Advanced Cell Processing Architecture which utilizes a dedicated embedded Intel i960 RISC processor along with special-purpose AAL5 and 3/4 Segmentation and Reassembly (SAR) hardware and scatter-gather DMA. The SBA-200E is an SBus master device and supports 32-bit wide SBus data transfers and SBus DVMA (Direct Virtual Memory Access) bursts up to 64 bytes. With the SBA-200E, users can add ATM networking capabilities to their applications, leaving the low-level ATM cell processing, segmentation and reassembly, and signalling to the SBA-200E hardware and device driver.

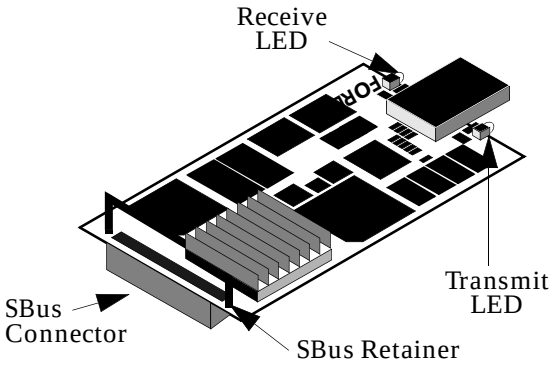

Figure 1.2 - SBA-200E Adapter Card

1.5 Software Overview

The SBA-200E adapter uses *ForeThought's* market-proven support for TCP/IP protocols (see Figure 1.3), allowing existing applications to operate with no modifications. Major advantages include high-performance network throughput delivered to applications, and the flexibility for future upgrades.

The SBA-200E software driver implements the SPANS Switched Virtual Circuits (SVC) signalling protocol to give applications end-to-end ATM connectivity including on-demand access to *ForeRunner* ATM switch multicast functions. An ATM Forum-compliant SNMP Management Information Base (MIB) is accessible by any SNMP network management system such as SunNet Manager. The software supports the UNI 3.0 and UNI 3.1 signalling standards. The current revision of software, *ForeThought 4.1*, is also compliant with the ATM Forum's *LAN Emulation over ATM, Version 1.0* standard.

The *ForeRunner* API library supplied with the SBA-200E offers applications access to the unique features of ATM such as guaranteed bandwidth reservation, per-connection selection of AAL5, 3/4, or 0(null); and multicasting with dynamic addition and deletion of recipients.

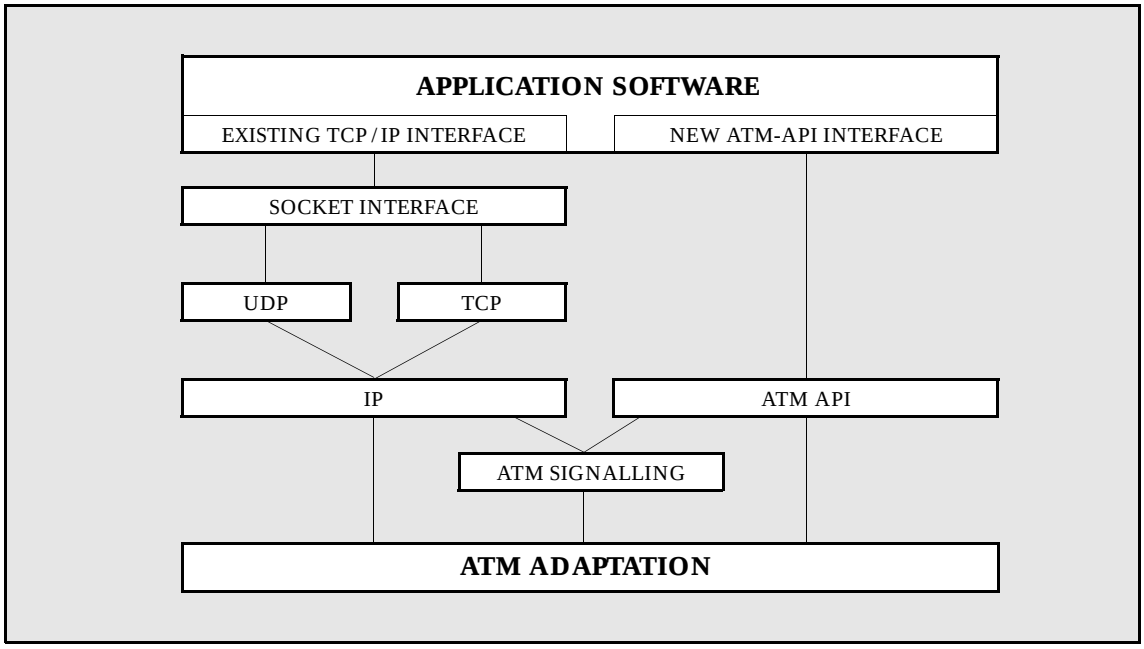

Figure 1.3 - SBA Software Architecture

1.5.1 SBA-200E Advanced Cell Processor Architecture

The SBA-200E's Advanced Cell Processor Architecture provides optimized on-board cell processing functions including segmentation and reassembly. The software device driver provides a high-performance packet-level interface to the cell-processing engine. The driver identifies the data packets to be communicated over ATM; the cell-processing engine does the rest.

1.5.2 Software Features

The 4.1 release of *ForeThought* software supports the ATM Forum *LAN Emulation Over ATM, Version 1.0* standard. The particular features supported include:

- LAN Emulation Services
- LAN Emulation Clients
- LEC failover
- Multiple Virtual LANs
- Ethernet emulation

Additional software features include:

- FORE IP load balancing
- FORE IP automatic failover
- Large MTU packet sizes in ATM-only ELANs
- Support for UNI 3.0 and 3.1 signalling
- Classical IP
- FORE API

Each of these features is detailed in the appropriate chapters throughout the manual.

1.6 Hardware Requirements

The SBA-200E can be installed in an available master SBus slot in any of the supported platforms.

1.6.1 SBA-200E Supported Platforms

The following are the supported platforms for the SBA-200E adapter card:

NOTE On a SPARCstation 5, the drivers run only with Solaris 2.4 or 2.5.

- Sun Microsystems, Inc., SPARCstation 2 (Any Slot)
- Sun Microsystems, Inc., SPARCstation 4 (Any Slot)
- Sun Microsystems, Inc., SPARCstation 5 (Any Slot)
- Sun Microsystems, Inc., SPARCstation 10 (Any Slot)
- Sun Microsystems, Inc., SPARCstation 20 (Any Slot)
- Sun Microsystems, Inc., SPARCstation Series 600, 1000 and 2000 (Any Slot)

1.7 Software Requirements

The supplied *ForeRunner* SBA-200E SBus device drivers support SunOS version 4.1.3 and Solaris versions 2.4 (Solaris patches 101945 and 102038 are required for Solaris version 2.4. Install 101945 first) and 2.5.

1.8 Unpacking Information

Before unpacking your SBA-200E, inspect the package for any damage that may have occurred during shipping. If the package shows any signs of external damage or rough handling, notify your carrier's representative.

When unpacking the SBA-200E, be sure to keep all original packing materials. They may be needed for storing, transporting, or returning the product.

CAUTION

All products returned to FORE Systems, under warranty, must be packed in their original packing materials.

CAUTION

The SBA-200E contains static-sensitive devices. Keep the adapter in its protective bag until installation. Electronic components are subject to damage from even small amounts of static discharge. Therefore, be sure to have your equipment properly grounded.

The *ForeRunner* SBA-200E adapter package contains the following:

- SBA-200E Adapter
- SBA-200E Software on CD-ROM with license
- *ForeRunner* SBA-200E ATM Adapter User's Manual (this manual)
- Anti-static Grounding Strap
- Warranty Registration Card

If any of the above items are missing or damaged, please contact FORE Systems' Technical Support immediately.

1.9 SBA-200E Technical Specifications

The capabilities and physical parameters of the SBA-200E are detailed in the table below.

Table 1.1 - SBA-200E Technical Specifications

Hardware	
Architecture	On-board 25 MHz i960 cell processor
AAL Support	Special purpose, on-board hardware for HEC, CRC, and AAL5 and 3/4 calculations
UNI (Physical Layer)	155 Mbits/sec SONET STS-3c/SDH STM-1
Form Factor	Single-slot Sbus
Compliance	ATM cell processing per ANSI T1S1.5/92-002R3, ITU I.361, and ATM Forum v3.0 and 3.1 UNI specifications
Cabling	Duplex 62.5/125 micron multi-mode fiber (2,000 meters maximum, 10 dB loss); 2-pair 100 ohm Category 5, or Category 5 screened, UTP copper (100 meters maximum)
Connectors	ST and SC Types for multi-mode fiber; RJ-45 for Category 5 UTP copper
Memory	256 kbytes on-board RAM
DMA Support	32-bit burst mode, bus master; “Fly-by,” scatter-gather DMA support; Supports block transfers up to 12816 words; Full 32-bit datapath
Software	
Transparent TCP/IP protocol interface	
Enhanced-performance ATM Application Programming Interface (API) Library	
SPANS Switched Virtual Circuit (SVC) signalling protocol	
Permanent Virtual Circuits (PVC)	
Application-controlled multicasting and broadcasting with recipient add and delete capabilities	
Supports up to 1024 Virtual Circuit Identifiers (VCIs)	
Support for UNI 3.0 and UNI 3.1 signalling	

Table 1.1 - SBA-200E Technical Specifications (Continued)

Support for ILMI (Interim Local Management Interface)	
Support for Classical IP Interfaces	
SNMP MIB access to adapter status, ATM cell statistics, cell errors, and VPI/VCI information	
Support for LAN Emulation Services and Clients	
General	
Dimensions	0.5” H x 3.3 “W x 5.8” D (1.3 cm x 8.4 cm x 14.7 cm)
Weight	6 oz. (170 g)
Power Requirements	2 A (maximum) @ +5V
Operating Temperature	32° F to 104° F (0° C to 40° C)
Operating Humidity	20% to 80%, non-condensing @ 40° C
Compliance	FCC Part15, Class A Verification (UTP); FCC Class B Certification (fiber-optic connectors)

Table 1.2 - System Limitations

Description	Limiting Value
Maximum number of streams open	255
Maximum number of connections per adapter	1024
Number of LECs supported per adapter	16
Maximum MTU size	65535 bytes
Incoming/outgoing (receive/send) VPI support	path 0 only

1.10 Cable Specifications

The following tables list the recommended cable specifications for use with the adapter:

Table 1.3 - Multi-Mode Fiber-Optic Cable Specifications

Description	Specification
Core Diameter	62.5 µm
Fiber Diameter	125 µm
Wavelength	1310 nm
Loss characteristic	~0.5 dB / km
Connector Style	SC or ST
Power Budget	11 dB[1]
Maximum run	approximately 2 km
Transmit Power	-19 dBm (minimum)
Receive Power	-30 dBm (minimum)

1. If a 50 µm core fiber is used, the power budget should be derated by 4dB.

The SBA-200E is available with UTP connectors. The requirements and pinouts for this cabling are given below.

Table 1.4 - CAT 5 UTP Cable Specifications

Description	Specification
AWG	24
Impedance (Ω)	100 + / - 15%
Attenuation (dB / 1000 ft. Max)	25 dB @ 16 mHz 52 dB @ 62.5 mHz 67 dB @ 100 mHz
Maximum Run	100 m[1]
Connector Type	RJ-45

1. Within a 100 meter run, a maximum of two connections are permissible.

The pinouts for the RJ-45 connector on an SBA are as follows:

Table 1.5 - CAT 5 UTP Pinouts

Pin	Signal
1	Transmit (+)
2	Transmit (-)
3	Not Used
4	Not Used
5	Not Used
6	Not Used
7	Receive (+)
8	Receive (-)

1.11 Product Registration Information

Please fill out the enclosed product registration card for your SBA-200E ATM adapter, and return it to FORE Systems.

CHAPTER 2 Hardware Installation

This section is designed to guide you through the installation of the SBA-200E in a SPARCstation or SPARCserver. The procedures contain step-by-step instructions for the successful installation of the SBA into an available SBus slot in your system. Please read *all* of this information carefully before attempting the installation.

2.1 General Installation Procedures

Installation of the SBA into an available SBus slot differs slightly for the various systems. Because there are wide variations in the procedures used to open the various system units, an exact procedure may not be presented for your particular system. Therefore, the instructions focus on the steps common to all models.

WARNING!

It is highly recommended that you use the included grounding strap when handling the adapter card, or any other computer component. The wrist grounding strap is just one portion of maintaining a static free environment. Be sure to follow all necessary precautions to prevent an accidental static discharge which may damage the computer or any of its components.

Handle the SBA by the edges, avoiding direct contact with all components and metal parts.

NOTE

Whenever installing a SBA into your system unit, please refer to the Operator Guide that came with your system for installation information specific to your model.

2.1.1 Halting the System

Before installing the SBA, your SPARCstation should be halted and powered down.

CAUTION

The SPARCstation should be halted in an orderly manner. Always close all open files and quit user processes before halting. Improperly aborting an application may damage files. For additional information about halting your SPARCstation, please refer to the *Sun System and Network Administration* manual.

The system should be halted as follows:

1. Save all work and quit all open applications.
2. Log in as **`root`** and type:

   `/etc/halt`

3. When the system is halted, power down the devices in this order:
   a. any attached external devices, (disk drives, etc.)
   b. the SPARCstation system
   c. the monitor
4. Unplug the power cord attached to the computer.

2.1.2 Opening the System Unit

CAUTION

Electronic components are extremely sensitive to static electricity. To prevent electrostatic discharge damage to the SBA adapter and other static-sensitive components, wear a properly grounded anti-static wrist strap while installing the adapter card.

Perform the following steps to open the system unit:

1. Halt the system as described in Section 2.1.1.
2. Follow the instructions in the your system's Operator Guide to allow access to the system's SBA bus slots (Figure 2.1).

.

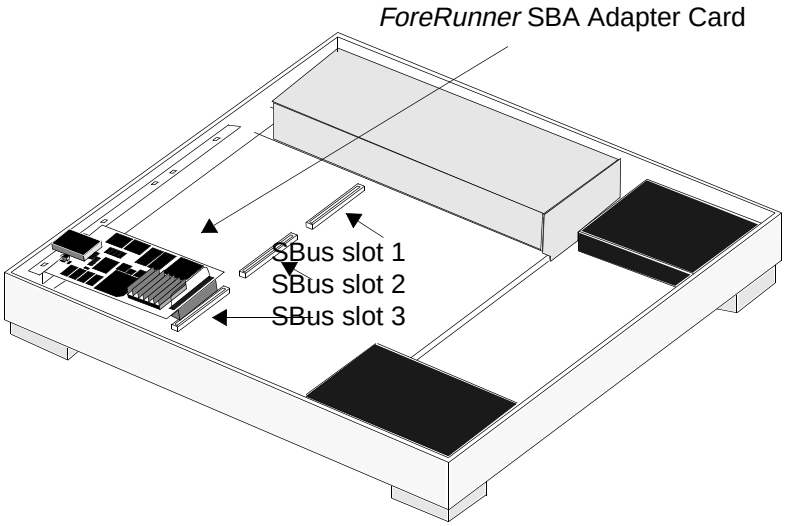

Figure 2.1 Typical System Unit Card Locations

2.1.3 Installing the SBA-200E Adapter

Because of the wide variations in procedures used to open the different system unit models, the following instructions focus on the steps common to the various models. Refer to the Operator Guide for your particular system for additional installation information.

Perform the following steps to install the SBA:

1. Open the system unit as described in Section 2.1.2.
2. Ground yourself to a metal part of the system unit chassis using the supplied grounding wrist strap.
3. Locate the Sbus slots.
4. Remove the blank cover plate for the slot you have chosen (retain the attaching screws).
5. Align the fiber-optic or UTP connectors on the board with the connector opening of the chosen slot in the back of the system unit. Align the opposite end of the SBA with the card connector of the chosen slot.
6. Push the board gently into the Sbus connector until the SBA's connector is firmly seated. Secure the adapter to the system unit's chassis using the retaining screws removed in step 4.
7. Close the system unit per the instruction given in your system unit's Operator Guide.
8. Attach the appropriate network cables.

2.2 SBA Post-Installation Test

After installing the SBA in your system, connect the appropriate fiber-optic or UTP cables to the receive and transmit connectors. You may then power-up your SPARCstation/SPARC-server. As your system is booting, you can execute the following test to ensure that the SBA has been properly installed:

1. Hold down the **L1** (**Stop** on some keyboards) and the **a** keys simultaneously to interrupt the booting process.
2. Press **n** to access the new command mode.
3. After receiving the **ok** prompt, type:

   <*your _sbus_slot***> probe-slot <ENTER>**

   where <*your_sbus_slot*> is the SBus slot in which you have installed the SBA. An example would be:

   1 probe-slot <ENTER>

If the SBA is properly installed, the following, or similar, information will appear on your screen:

```
FORE Systems SBA-200 address: 0 20 48 10 2b cd
```

Type **boot <ENTER>** to restart the booting process.

CHAPTER 3 Software Installation and Kernel Configuration

The following instructions detail the software installation and kernel configuration procedures for the SBA-200E adapter software and device driver. In order to take full advantage of the SBA-200E, a new kernel must be created, containing the SBA-200E device driver. The kernel must contain the SBA-200E device driver to enable the card to support the Internet Protocol suite and the user-level ATM API *(Application Programming Interface)*.

Additionally, this chapter provides information pertaining to the usage of the SBA-200E with the Solaris operating system. The main differences between the SunOS version and the Solaris version are in the software installation procedures.

3.1 SBA-200E Software Installation Requirements

The following are requirements to ensure proper software installation for an SBA-200E:

SunOS Version

- Root Password
- 7.6 MB of space in the installation directory
- 2.5 MB of space in the root directory
- 2.9 MB of space for SBA-200EUX initialization programs
- 4.0 MB of space for utilities and man pages
- SBA-200E adapter card must be installed

Solaris Version

- Root Password
- 5.5 MB of space in the installation directory
- 3.0 MB of space in the root directory
- 3.2 MB of space for utilities and man pages
- SBA-200E adapter card must be installed

3.2 Software Installation and Configuration

3.2.1 Before You Begin

Before installing FORE software and configuring a Classical IP interface or configuring LAN emulation, you should read through the entire installation, Classical IP configuration instructions, and LAN Emulation configuration instructions for the OS running on your workstation. For SunOS, these instructions begin in Section 3.2.2. For Solaris, these instructions begin in Section 3.2.5.

NOTE

Detailed explanations of the various questions and answers that may appear in the installation and configuration scripts are found in Section 3.2.3.2 for SunOS and Section 3.2.6.2 for Solaris.

Please note that LAN Emulation need not be configured as part of installation. You may configure LAN Emulation separately by running **`configure_lanem`** as described in Chapter 6. If you are unsure of the responses to the questions on network configuration, please contact your network administrator. If you are a network administrator and are unsure of the responses to the questions, please contact FORE Systems Technical Support.

For many installations, you will need to configure the software once. However, in some situations, you may need to establish a temporary kernel configuration and then, based on information obtained from the temporary configuration, reconfigure the software to establish the desired network set-up.

3.2.1.1 Temporary Configuration

There is one case where the software may require a second Classical IP configuration:

- If the host into which the adapter was installed will be the ARP server and the ARP server ATM address is assigned via ILMI

For this case, the suggested procedure is to perform an initial Classical IP configuration answering most questions by accepting the defaults. The exceptions are the ATM address of the ARP server and the configuration of a Classical IP interface. For the ATM address, use a temporary number. For the Classical IP interface, respond **`y`** and configure just one, **`qaa0`**. These steps are more fully explained in Section 3.2.3.2 and Section 3.2.5.

NOTE

If you will be using a host as an ARP server, this host MUST be configured first.

On the ARP server, once the software has been installed, and the system has rebooted, use the **`atmarp -z qaa0`** command to obtain the host's ATM address. Write down the ATM address or store this data in a file. It is easier to do a "cut-and-paste" from a file rather than retype a 40 character ATM address.

With the ATM address, you can perform the full installation on the ARP server and all client hosts, using all of the desired configuration parameters. If you ever need to reconfigure the network again, please remember that it is easier to obtain the ARP server address from a running system.

3.2.2 Software Installation for SunOS Systems

The SBA-200E device driver for the SunOS operating system, ATM API library, installation and administration programs, and on-line manual pages, are contained on the software distribution CD-ROM.

1. To load the FORE Systems *ForeRunner* SBA-200E software onto your system, log in as **`root`**. After you log in, create a read-only directory on which the CD-ROM file system will be mounted (e.g., **`/cdrom`**).
2. Insert the CD-ROM into the system's CD-ROM drive and execute the following command:

```
mount -r -t hsfs device_filename directory_name<ENTER>
```

where **`device_filename`** is the device name of your system's CD-ROM drive (e.g., **`/dev/sr0`**), and **`directory_name`** is the name of the directory you created in step 1.

3. Create a directory: e.g., **`/usr/fore`** and copy the appropriate **`tar`** file into it.
4. Untar the file in the directory created in step 3 by first making that directory current, and then entering the following command:

```
tar -xvf file_name <ENTER>
```

5. To begin the software installation process, run the **`fore_install`** program by typing:

```
./fore_install <ENTER>
```

When the **`fore_install`** program is run, the following screen appears:

NOTE User input to the prompt you receive is indicated in bold e.g., **`y<ENTER>`**.

```
*****************************************************
****                                             ****
****    FORE Systems SBA System Installation     ****
****                                             ****
*****************************************************
In order to properly install this distribution, the following
conditions must be true:
    1. You must run this program as root.
    2. The kernel configuration files must exist in /usr/kvm and belong
       to this system (i.e. not NFS mounted from another machine).
    3. You must have approximately 2500 KB of free disk space in
       the root directory for a new kernel.
    4. You must have approximately 2900 KB of free disk space for the
       SBA initialization programs.
    5. You must have approximately 4000 KB of free disk space for
       utilities and man pages.
Are all conditions true? y
Checking the manifest to see if you have a complete distribution...
The distribution is complete.
```

At this point, the software has been installed, but not yet configured. The **fore_install** program continues as presented in the following section.

3.2.3 Kernel Configuration for SunOS

In most cases, the fore_install program will automatically handle kernel configuration. Please contact FORE Systems' Technical Support for assistance if the fore_install program encounters a system configuration it cannot handle.

3.2.3.1 Typical Configuration Session

The following screens address questions that must be answered for proper kernel configuration, and contain samples of the text that will appear on your screen during file modification and configuration. User inputs to prompts you receive are indicated in bold e.g., **`ATM.4.1.0 <ENTER>`**.

NOTE

If there is a default response to a given prompt, it will appear in brackets `[ ]`. The user may accept the default response by pressing the **`<ENTER>`** key.

This example assumes the kernel name **`ATM.4.1.0`**. It also assumes that you are configuring both LAN emulation services and clients. The actual session for your installation will reflect the name of your system's presently running kernel, and the configuration that you wish to implement. Detailed explanations of the questions and answers presented below follow in Section 3.2.3.2.

```
Each different kernel configuration under SunOS has a name to
identify it.  You can either modify an existing kernel
configuration, or create a new configuration file and modify that.
You are currently running the kernel configuration called ATM.4.1.0
If you would like to modify this kernel configuration,
answer "ATM.4.1.0" now; if you want to create a new configuration,
answer with another name.
What is the name of the configuration you wish to make? [ATM.4.1.0]ATM.4.1.0 <ENTER>
The kernel configuration ATM.4.1.0 does not yet exist.
I need to copy an existing kernel configuration to use
as a base for the FORE ATM kernel.
What kernel configuration should I use as a base for ATM.4.1.0? [GENERIC] <ENTER>
Into which directory should I install the firmware?
(The directory must be local to this machine.) [/usr/etc/fore]: <ENTER>
The directory /usr/etc/fore exists.  I am about to rename /usr/etc/fore
to /usr/etc/fore.old.
okay to rename /usr/etc/fore [n]: y <ENTER>
/usr/etc/fore.old exists.  I am about to remove it.
okay to remove /usr/etc/fore.old [n]: y <ENTER>
Under which directory should I install utilities and man pages?
[/usr/fore]: <ENTER>
Enter the name for the FORE ATM interfaces [fa]: <ENTER>
The interfaces will be called fa.
Installing new files...
     /usr/etc/fore/perl
     /usr/etc/fore/ncomm
     /usr/etc/fore/sba200.bin1
     /usr/etc/fore/sba200.bin2
     /usr/etc/fore/sba200e.bin1
     /usr/etc/fore/sba200e.bin2
     /usr/etc/fore/atmarp
     /usr/etc/fore/snmpd
     /usr/etc/fore/lane
     /usr/etc/fore/le
     /usr/etc/fore/lecs
     /usr/etc/fore/atmconfig
     /sbin/fore/launch_lanem
     /sbin/fore/elconfig
     /sbin/fore/fore_expr
     /usr/kvm/sys/sun4c/OBJ/fore_atm.o
     /usr/etc/fore/rc.sba200
done.
```

```
Changing group ownership of atmarp...
Include support for the Berkeley Packet Filter (BPF)?  [n]: <ENTER>
Installed ./kernel/fore_bpf.c in /usr/kvm/sys/sunif without BPF support.
Modifying copies of configuration files...

Modifying a copy of /usr/kvm/sys/sun/conf.c...

It seems that you already have an ATM device installed in conf.c
I will be removing the old installation lines from conf.c

I found the old headers in lines 842 to 853 of conf.c
would you like to see them before I remove them? [n]: <ENTER>
I found the old cdev entry in lines 1412 to 1416 of conf.c
would you like to see them before I remove them? [n]: <ENTER>
Modifying a copy of /usr/kvm/sys/netinet/in_proto.c...
Modifying a copy of /usr/kvm/sys/sun4c/conf/files...
Modifying a copy of /usr/kvm/sys/sun4c/conf/ATM.4.1.0...
Modifying a copy of /etc/rc.local...
```

The following lines appear only if you already have a previous release of FORE's software installed.

```
It seems that you already have an sba-200 initialization in /etc/rc.local
but I will remove it before installing the new initialization.
would you like to see them before I remove them? [n]: <ENTER>
```

The following lines appear only if you already have FORE snmpd additions installed.

```
It seems that you already have FORE snmpd additions in /etc/rc.local
but I will remove them before installing the new initialization.
would you like to see them before I remove them? [n]: <ENTER>
Would you like to use FORE's SNMP agent? [y]: <ENTER>
Would you like to use the standard UDP ports for SNMP (161/162)? [y]: <ENTER>
Would you like to use ILMI for Address Registration? [y]: <ENTER>
Would you like to use ILMI for UNI auto-configuration? [y]: n<ENTER>

Enter UNI version to use for physical unit 0 [3.0/3.1]: 3.1<ENTER>

Enter UNI version to use for physical unit 1 [3.0/3.1]: 3.0<ENTER>

Enter UNI version to use for physical unit 2 [3.0/3.1]: <ENTER>
Modifying a copy of /etc/rc.boot...
```

The following lines appear only if LAN Emulation was configured previously.

```
It seems that you already had FORE Systems LAN Emulation configured
in /etc/rc.boot but I will remove those lines before installing the
new initalization.
would you like to see them before I remove them? [n]: <ENTER>
Would you like to configure LAN Emulation? [n]: y<ENTER>
```

The following portion of the script represents a typical new LAN Emulation configuration. If you answered [n] to the previous question, this section of the installation script will not appear. Responses to the following questions are system-specific and must be determined by the system administrator prior to configuring an emulated LAN.

NOTE

If you wish to configure only LECs, answer “n” to the questions presented in the Services Configurations section. If you wish to use an LECS, the system-specific information must also be entered in the LECS configuration file. This may be done either with the *VLAN Manager*, or with an editor as described in Chapter 6.

```
=====================================================================
                FORE Systems LAN Emulation Configuration
=====================================================================
***** No Configuration Information *****

Would you like to run an LECS on this host? [n] y<ENTER>
Enter the LECS configuration file pathname [/sbin/fore/lecs.cfg]: <ENTER>
Enter the LECS Selector octet : 0x10<ENTER>
Enter the LECS Adapter number [0]: <ENTER>
Would you like to suppress the LECS well-known address? [n] <ENTER>

Would you like to run LES's and/or BUS's on this host? [n] y<ENTER>
(0): LES, BUS, or LES/BUS pair <les/bus/pair> (return to end): pair<ENTER>
(0): Enter the LES Selector octet : 0x20<ENTER>
(0): Enter the BUS Selector octet : 0x30<ENTER>
(0): Enter LES/BUS Server Name: engineering<ENTER>
(0): Enter LAN type <[ethernet]/token-ring>: <ENTER>
(0): Enter max frame size <[1516]/4544/9234/18190>: 18190<ENTER>
(0): Enter adapter number [0]: <ENTER>
(1): LES, BUS, or LES/BUS pair <les/bus/pair> (return to end): <ENTER>
```

```
Would you like to use an LECS to retrieve configuration information? [y] <ENTER>
Use the “Well-Known” LECS address? [y] <ENTER>

An Automatic ELAN is a special case, where you do not specify
the ELAN to join. The ELAN is decided by the Administrator by
configuring the LECS database.
Would you like to configure a Automatic ELAN? [y] <ENTER>
Enter Adapter number [0]: <ENTER>
Enter Interface name [el0]: <ENTER>

Enter ELAN name to configure (return to end):
=====================================================================
Current Configuration Information ...

Service:                 LECS
  Configuration file:  /sbin/fore/lecs.cfg
  Selector octet:      0x10
  Adapter Number:      0
Service:                 LES/BUS pair
  LES Selector octet:  0x20
  BUS Selector octet:  0x30
  Server Name:         "engineering"
  LAN type:            ethernet
  Max frame size:      18190
  Adapter Number:      0

LECS ATM Address       “Well-Known”

ELAN:                    Automatic ELAN
  Adapter Number:        0
  Interface Name:        el0
=====================================================================
Do You Want To Modify Configuration Information? [n] <ENTER>
Save Configuration Information? [y] <ENTER>
Saving /sbin/fore/fore_lanem.conf ...
```

This ends the LAN emulation configuration part of the script. The remaining portion of the script will appear whether you chose to configure LAN emulation or not.

```
Modifying a copy of /usr/etc/fore/rc.sba200...
Would you like to configure Classical IP? [n]: y <ENTER>
Would you like to configure qaa0 [y]: <ENTER>
Enter the ATM address for the ARP server
0x47.0005.80.ffe100.0000.f115.0bab.002048102ad2.00 <ENTER>
Would you like to configure qaa1 [y]: n <ENTER>

I have correctly modified copies of the following files:
        /usr/kvm/sys/sun/conf.c
        /usr/kvm/sys/netinet/in_proto.c
        /usr/kvm/sys/sun4c/ATM.4.1.0/param.c
        /usr/kvm/sys/sun4c/conf/files
        /usr/kvm/sys/sun4c/conf/ATM.4.1.0
        /etc/rc.local
        /usr/etc/fore/rc.sba200
I am about to replace the old versions of these
files with the new versions.  I will save the
old versions in files with a ".fore" extension.
(e.g. /usr/kvm/sys/sun/conf.c.fore)
okay to continue? [n]: y <ENTER>
Configuring ATM.4.1.0... please wait
Doing a "make depend"
Building ATM.4.1.0... please wait
```

Messages indicating the progression of the compilation appear on-screen, followed by:

```
The kernel has been built.  I am going to save your old kernel
In /vmunix.orig and place the new kernel in /vmunix.
okay to proceed? [n]: y <ENTER>
Creating device nodes in /dev...
I found the following devices already present:
        /dev/fa0
        /dev/fa1
        /dev/qaa0
        /dev/qaa1
        /dev/qaa2
        /dev/qaa3
can I remove them? [n]: y <ENTER>
I have completed the configuration and installation of The new
FORE ATM kernel.  For these changes to take effect, the system must
be rebooted.  When the system reboots, you should see a message
similar to:
        FORE,sba-200e0 at SBus slot x 0x400000 and SBus
         slot x 0x800000 and SBus slot x 0xc00000 and SBus slot x 0x1000000
         pri 2
if you have a SBA-x00 card installed in one of the SBus slots.
Should I reboot the system now? [y]: y <ENTER>
```

After the machine successfully reboots, you must configure the network interfaces in accordance with Section 4.1 of this User's Manual.

3.2.3.2 Kernel Configuration Script Questions and Responses for SunOS

While running the configuration script with the **fore_install** command, you will be prompted for responses to a number of questions that will customize your ATM kernel configuration. These questions are shown below in `courier` font. During your individual software installation, you may not see all of the questions. The prompts that you do see depend on your environment and on answers to previous questions. In this section, the question will be shown first, and the explanations of effects of the possible replies are shown after the questions. A typical configuration session is shown in Section 3.2.3.1.

```
What is the name of the configuration you wish to make ? [ATM.4.1.0]
```

This question allows you to name the kernel. If the name already exists from a prior installation, you will be prompted as shown below to be sure the kernel is not accidentally reconfigured.

```
Are you sure you want to modify ATM.4.1.0 [n]:
```

Answering **y** to this prompt will cause the old version of the kernel configuration to be overwritten. If you answer **n**, the previous question is presented again.

```
Into which directory should I install the firmware?
(The directory must be local to this machine) [/usr/etc/fore]
```

The SBA-200E firmware, along with utilities to download the firmware are needed at system boot time. These files will be copied into **/usr/etc/fore** or the specified directory.

```
Under which directory should I install utilities and man pages?
[/usr/fore]
```

FORE Systems' man pages and utilities will be copied to **/usr/fore** or the specified directory.

```
Enter the name for the FORE ATM interfaces [fa]
```

The ATM interface will be called **fa** or the specified name.

After entering the interface name, messages indicating files were copied will appear. The last message to appear will be:

```
Changing group ownership of atmarp...
Include support for the Berkeley Packet Filter (BPF)? [n]
```

The BPF allows use of the **tcpdump** utility to monitor the network. If you answer **y** to this question, questions concerning the location of the BPF header files follow.

```
Would you like to use FORE's SNMP agent? [y]
```

If you use the SNMP agent supplied by FORE Systems, you will have access to the FORE Systems Management Information Base (MIB). Using this in conjunction with applications such as *ForeView*, or other network management applications, enables you to remotely monitor your SBA-200E adapter card. Answering **y** to this question will cause **snmpd** to run. It is

started from the script **rc.sba200** in the directory **/usr/etc/fore** or the user specified directory. Answering **n** to this question will suppress execution of **snmpd**, and will circumvent the next three questions in the installation script.

```
Would you like to use the standard UDP ports for SNMP (161/162)? [y]
```

SNMP agents generally use port 161 to receive queries, and port 162 to send trap messages. Only one agent can bind to these ports at a time. Therefore, in order to run a vendor-supplied SNMP agent at the same time as FORE's SNMP agent, one agent must run on a different set of ports. If you do not wish to run both SNMP agents, reply to this question with a **y**. If you must run both, reply to this question with a **n** and continue with the next two questions.

```
UDP port to use to receive SNMP messages not containing TRAP-PDUs:
UDP port to use to send SNMP messages containing TRAP-PDUs:
```

These two questions ask for new UDP port numbers to use for SNMP queries and trap messages. In addition to supplying the new port numbers here, you must also configure any network management applications, such as ForeView, to query the agent using the new ports.

```
Would you like to use ILMI for Address Registration? [y]:
```

The Interim Local Management Interface (ILMI) is a protocol used to dynamically assign an ATM address to a UNI 3.0 or 3.1 port. This ATM address is used in UNI 3.0 and 3.1 signalling messages to identify the workstation. If you plan to use UNI 3.0 or 3.1 signalling, it is recommended that you respond **y** to this question. If you choose to reply **n** and you will be using UNI 3.0 or 3.1 signalling, you will need to manually configure an ATM address in the host and in the switch to which it is connected. You will be prompted for the ATM address of the host later in the installation process. See Section 5.2 for more information about ILMI and address registration.

ILMI is implemented as part of FORE Systems' SNMP agent. If you have chosen not to run this agent, you can still use ILMI. In this case, **snmpd** will be renamed to **ilmid**, and only the ILMI protocol will be active. If you have chosen to run FORE Systems' SNMP agent as well as ILMI, both protocols will be active. Either **snmpd** or **ilmid** is executed on bootup from the script **rc.sba200** in the directory **/usr/etc/fore** or the user specified directory.

```
Would you like to use ILMI for UNI auto-configuration? [y]:
```

Answering **y** allows ILMI to auto-configure the UNI version. Answering **n** results in the following question:

```
Enter UNI version to use for physical unit 0 [3.0/3.1]:
```

Respond with the UNI version that you wish the adapter 0 to use (**3.0** or **3.1**).

```
Enter UNI version to use for physical unit 1 [3.0/3.1]:
```

This promt appears if a second ATM adapter is present in your system. This prompt will be repeated for each ATM adapter present in your system.

```
It seems that you already had FORE Systems LAN Emulation configured
in /etc/rc.boot but I will remove those lines before installing the
new initalization.
would you like to see them before I remove them? [n]:
```

This question appears if LAN Emulation has been configured previously. Answer `y` if you wish to see the current configuration information.

```
Would you like to configure LAN Emulation? [n]
```

If you answer y, the **`configure_lanem`** script will execute. The sample session shown in Section 3.2.3.1 is described as follows:

```
=====================================================================
                FORE Systems LAN Emulation Configuration
=====================================================================

***** No Configuration Information *****
```

If LAN Emulation has not been configured previously, the **`No Configuration Information`** message appears. If emulated LANs have been configured, current configuration information will appear, followed by the next question.

```
Do You Want To Modify Configuration Information? <y/[n]>
```

If you wish to configure or modify LAN Emulation, respond with **`y`**. Answering **`n`** ends the LAN Emulation Configuration process.

```
Would you like to run an LECS on this host? [n]
```

If you wish to run a LAN Emulation Configuration Server (LECS) on the host system, respond with a **`y`**. System-specific information must also be entered in the LECS configuration file. This may be done either with the *VLAN Manager*, or with an editor as described in Chapter 6.

NOTE

Detailed information on the implementation and configuration of the LECS is available in the online **`lecs`** man page. The **`lecs`** man page text is also available for reference in Chapter 8 of this manual.

If you respond with an **n**, the next three prompts will not appear.

NOTE

The following prompts include requests for input of various selector octet values. These values may be entered in decimal format(default) or in hexadecimal format. If hexadecimal format is used, the value must be preceded by **0x**. Valid numbers are **0** through **255** decimal or **0x0** through **0xff** hexadecimal.

```
Enter the LECS configuration file pathname [/sbin/fore/lecs.cfg]:
```

Enter the path and name of the configuration file that the LECS is to use. The path and name given in the example point to the default LECS configuration file installed with the supplied software.

```
Enter the LECS Selector octet :
```

Enter the value for the selector byte of the ATM address of the LECS.

```
Enter the LECS Adapter number [0]:
```

Enter the unit number of the ATM adapter that is the host of the LECS.

```
Would you like to suppress the LECS well-known address? [n]
```

Answer **y** if you wish to suppress the default LECS well-known address.

```
Would you like to run LES's and/or BUS's on this host? [n]
```

If you wish to run a LAN Emulation Server (LES) and/or a Broadcast and Unknown Server (BUS) on this host, answer **y**.

NOTE

Detailed information about the establishment and use of the LAN Emulation Server (LES) and Broadcast and Unknown Server (BUS) is available in the on-line **le** man page. The **le** man page text is also available for reference in Chapter 8 of this manual.

NOTE

The zeroes in parentheses at the beginning of the following prompts signify that this is the first instance of a LES, BUS, or LES/BUS pair being configured. This value increments each time that these prompts appear, signifying the establishment of an additional LES, BUS, or LES/BUS pair.

```
(0): LES, BUS, or LES/BUS pair <les/bus/pair> (return to end):
```

This prompt allows you to configure a LES, BUS, or LES/BUS pair on this host. Valid entries are **`les`**, **`bus`**, and **`pair`**. Pressing the return key without an entry will bypass this part of the configuration.

```
(0): Enter the LES Selector octet :
```

This prompt will appear if the user answered the **`LES`**, **`BUS`**, or **`LES/BUS pair`** prompt with either **`les`** or **`pair`**. Enter the value for the selector byte (octet) of the ATM address of the LES.

```
(0): Enter the BUS Selector octet :
```

This prompt will appear if the user answered the **`LES, BUS, or LES/BUS pair`** prompt with either **`bus`** or **`pair`**. Enter the value for the selector byte (octet) of the ATM address of the BUS.

```
(0): Enter LES/BUS Server Name:
```

Enter the name (**`engineering`**, for example) you wish to assign to the LES/BUS Server that you are configuring.

```
(0): Enter LAN type <[ethernet]/token-ring>:
```

Enter the LAN type that you wish to emulate. The default is **`ethernet`**.

```
(0): Enter max frame size <[1516]/4544/9234/18190>:
```

Enter the maximum frame size that will be permitted on the LAN type that you are emulating. The default is **`1516`**.

```
(0): Enter adapter number [0]:
```

Enter the unit number of the host adapter for the ELAN services that you are configuring.

NOTE

Detailed information about the establishment of an emulated LAN (ELAN) is available in the on-line **elconfig** man page. The **elconfig** man page text is also available for reference in Chapter 8 of this manual. Note that a host may join more than one ELAN. A LEC must be configured for each ELAN that you wish to join.

```
Would you like to use an LECS to retrieve configuration information? [y]
```

Answer **y** to this question if you wish the local LAN Emulation Client (LEC) to use an LECS to retrieve configuration information. Answer **n** if you wish the local LEC to use an LES that you specify for configuration information. The following question will not appear if you answer **n**.

```
Use the "Well-Known" LECS address? [y]
```

Answering **y** to this question instructs the local LEC to use the default (**"well known"**) ATM address for communicating with the LECS. If you answer **n**, you will be prompted to enter the ATM address of the LECS that the LEC is to use.

```
An Automatic ELAN is a special case, where you do not specify
the ELAN to join. The ELAN is decided by the Administrator by
configuring the LECS database.
Would you like to configure a Automatic ELAN? [y]
```

Answer **y** if you wish to configure an Automatic ELAN. You will then be prompted to enter the adapter number and interface name to be used by the Automatic ELAN LEC. If you answer **n**, the following two prompts will not appear.

```
Enter Adapter number [0]:
Enter Interface name [el0]:
```

```
Enter ELAN name to configure (return to end):
```

The name of the emulated LAN that you wish to configure (for example, **marketing**) is entered in response to this prompt.

```
Enter LES address Manually? [n]
```

Answer **y** if you wish to enter the ATM address that the ELAN named in the previous prompt is to use when communicating with the LES. Answer **n** if you wish ELAN members to use the LECS to discover the ATM address of the ELAN's LES.

```
Enter ELAN name to configure (return to end):
```

If you wish to configure another ELAN, enter the ELAN name here. If you are finished configuring ELANs, press the return key to end ELAN configuration. The script then presents the current LAN emulation configuration similar to the following:

```
=====================================================================
Current Configuration Information ...

Service:                 LECS
  Configuration file:  /sbin/fore/lecs.cfg
  Selector octet:      0x10
  Adapter Number:      0
Service:                 LES/BUS pair
  LES Selector octet:  0x20
  BUS Selector octet:  0x30
  Server Name:         "engineering"
  LAN type:            ethernet
  Max frame size:      18190
  Adapter Number:      0

LECS ATM Address:        0x00.0000.00.000000.0000.0000.0000.000000000000.00

ELAN:                    Automatic ELAN
  Adapter Number:        0
  Interface Name:        el0
=====================================================================
Do You Want To Modify Configuration Information? [n]
```

Answer **y** if you wish to change, delete, or add LAN emulation configuration information. Answering **n** produces the following prompt.

```
Save Configuration Information? [y]
```

Answer **y** if you wish to save the configuration information that you have entered. The system responds with a line indicating the configuration information is being saved in a file called **fore_lanem.conf**. Answer **n** if you wish to abort the LAN emulation configuration information that you have entered.

```
Would you like to configure Classical IP? [n]
```

Classical IP is a standard method for sending and receiving IP traffic over an ATM network. This protocol utilizes UNI 3.0 or 3.1 signalling to set up and tear down connections to other IP stations. If you would like to use this protocol, respond **y** to the question. Otherwise, respond with **n**.

```
Would you like to configure qaa0? [y]
```

qaa0 is the name of an interface which will support Classical IP. If you will be using Classical IP, you should configure **qaa0** by replying with **y**, then entering the ATM addresses as requested by the next prompt. After configuration of **qaa0** is complete, you will be prompted for configuration of **qaa1**. If you would like more than one Classical IP interface, reply **y** to the question about **qaa1**. If you would only like one interface, reply **n**. You will also be prompted to configure **qaa2**, and then **qaa3**, if you have configured all of the previous interfaces.

```
Enter the ATM address for the ARP server
```

The ARP server ATM address must be configured into each workstation (including the ARP server itself). It is recommended that you first configure the ARP server, and then configure all other hosts with the ARP server's ATM address. ARP server configuration is covered in detail in Chapter 5.

Any FORE Systems host or switch has the ability to be the ARP server for a network. You must have exactly one ARP server on each Classical IP network. You configure a host or switch to be the ARP server by specifying its ATM address as the ARP server's ATM address. When the host or switch sees that its ATM address matches the ARP server's ATM address, it will start acting as the ARP server for that Classical IP network.

The ATM address may be supplied by your system administrator or may come from querying the host itself. It is a 20 byte number, and must be unique. You should input it using 40 hexadecimal digits. You may precede the ATM address with a "**0x**", and you may use dots (periods) as separators, but neither is necessary. As an example:

```
0x47.0005.80.ffe100.0000.f115.0bab.002048102fe4.00

47.0005.80.ffe100.0000.f115.0bab.002048102fe4.00

47000580ffe1000000f1150bab002048102fe400
```

are all valid ATM addresses. If not using ILMI, you must also configure this ATM address in the switch to which this host is directly connected.

When using ILMI for address registration on the ARP server, you will not know the ATM address that ILMI has assigned until installation is complete and the machine has rebooted. Until then, you should enter a temporary ATM address, such as **11111111111111111111111111111111111111111**, (a 40-character string of ones) in response to this prompt. You can then continue with the installation and reboot the machine.

After rebooting, determine the ATM address for the host by issuing the following command:

/usr/fore/etc/atmarp -z qaa0

Use the command:

`/usr/fore/etc/atmarp -g qaa0`

to get the ATM address of the ARP server.

Then, you should rerun the kernel configuration script, entering the correct ATM address in response to the prompt. In either case, you should reboot your machine again so that the change will take effect.

NOTE

Write down the ARP server ATM address, because you will need it to configure each of your workstations.

If you are not using ILMI for address registration, your system administrator will be able to supply you with the ATM address of the ARP server. Use this number in response to the prompt.

```
Would you like to configure qaa1? [y]
```

`qaa1` is the name of next interface which will support Classical IP. If you will be using Classical IP and would like more than one Classical IP interface, you should configure **`qaa1`** by replying with **y**, then entering the ATM addresses as requested by the next two prompts. After configuration of **`qaa1`** is complete, you will be prompted for configuration of **`qaa2`**. If you would like more than two Classical IP interfaces, reply **y** to the question about **`qaa2`**. If you would only like two interfaces, reply **n**. You will also be prompted to configure **`qaa3`**, if you have configured all of the previous interfaces.

After configuring the Classical IP interfaces and LAN Emulation, messages indicating the copying of the new files, and in some case the overwriting of older files will appear. The next text to appear reads:

```
I am about to replace old versions of these
files with the new versions. I will save the
old versions in files with a ".fore" extension.
((e.g. /usr/kvm/sys/sun/conf.c.fore)
okay to continue [n]
```

Respond with **y** to allow the configuration to continue.

```
Configuring ATM.4.1.0... please wait
Doing a "make depend"
Building ATM.4.1.0... please wait
```

Messages indicating the progression of the compilation will then appear. The installation continues after the text:

```
The kernel has been built.  I am going to save your old kernel
In /vmunix.orig and place the new kernel in /vmunix.
okay to proceed? [n]:
```

Entering a **y** allows the kernel configuration to proceed. The following messages then appear:

```
Creating device nodes in /dev...
I found the following devices already present:
        /dev/fa0
        /dev/fa1
        /dev/qaa0
        /dev/qaa1
        /dev/qaa2
        /dev/qaa3
can I remove them? [n]:
```

If any **fa**, or Classical IP interfaces were previously created, they will have been listed above. Because you want to use the newer interfaces, respond **y** to remove the old ones.

```
I have completed the configuration and installation of The new
FORE ATM kernel.  For these changes to take effect, the system must
be rebooted.  When the system reboots, you should see a message
similar to:
        FORE,sba-200e0 at SBus slot x 0x400000 and SBus
         slot x 0x800000 and SBus slot x 0xc00000 and SBus slot x 0x1000000
         pri 2

if you have a SBA-x00 card installed in one of the SBus slots.
Should I reboot the system now? [y]:
```

Responding with **y** will allow the computer to reboot with the newly defined kernel and interfaces.

3.2.4 Kernel Verification

After the new kernel configuration routine is complete, it should be verified to ensure that it is functioning properly. To check your new kernel, simply reboot the system and watch the boot messages that appear on the screen. If the new kernel configuration is correct, you should see a reference to `sba-2000` (1 SBA-200 installed) or `sba-2000` and `sba-2001` (2 SBA-200 cards installed) in the boot messages. If "E" series adapters are installed the messages will be SBA-200E0, or SBA-200E0 and SBA-200E1 (2 SBA-200E cards installed). The message that appears will depend on the number of SBus cards installed in your system. If you see either of these references, and no error messages related to these device names appear, you are ready to use the SBA-200 for network traffic.

If you encounter any problems with the new kernel configuration, contact FORE Systems' Technical Support.

3.2.5 Software Installation for Solaris Systems

The SBA-200E device drivers for the Solaris operating system, ATM API library, installation and administration programs, and on-line manual pages, are contained on the software distribution CD-ROM.

1. Load the CD-ROM into the system's CD-ROM drive. If the volume manager daemon, **vold**, is running the CD-ROM's file system will auto-mount on a directory (e.g., **/cdrom**). Proceed to Step 4 below. If **vold** is not running, continue with step 2.
2. Create a read-only directory on which the CD-ROM file system will be mounted (e.g., /cdrom).
3. Insert the CD-ROM into the system's CD-ROM drive and execute the following command:

   mount -F hsfs -r dev_filename directory_name<ENTER>

   where **device_filename** is the name of your CD-ROM (e.g., **/dev/dsk/c0t6d0s0**), and **directory_name** is the name of the directory you created in step 2. Consult the Solaris documentation if your CD-ROM drive is addressed differently from the example device filename.
4. Untar the file by entering the following command:

tar -xvf directory_name/sun/sunos5/sunos5_sba_4.1.0.tar<ENTER>

   where **directory_name** is the directory on which the CD-ROM file system is mounted. A **fore** directory will be created underneath your current directory by the **tar** command. The installation files will be copied into that directory.
5. To begin the software installation process, run the **fore_install** program by typing:

   cd fore

   ./fore_install<ENTER>

   When the **fore_install** program is run, the following screen appears:

NOTE User input to the prompts you receive are indicated in bold, e.g., **y<ENTER>**.

```
*****************************************************
****                                             ****
****    FORE Systems SBA System Installation     ****
****                                             ****
*****************************************************

In order to properly install this distribution, the following
conditions must be true:

    1. This installation must be performed as root.
    2. There must be approximately 3000 KB of free disk space in
       the root filesystem for the installation of the driver.
    3. There must be approximately 3000 KB of free disk space for
       utilities and 180 KB of free disk space for man pages.
    4. There must be an SBA adapter installed.

Proceed? y <ENTER>

Configuration utilities must be installed in the root filesystem.
Enter the installation directory [/etc/fore]: <ENTER>

General utilities may be installed in any writable filesystem.
Enter the installation directory [/usr/local/bin]: <ENTER>

Man pages may be installed in any writable filesystem.
Enter the installation directory [/usr/local/man]: <ENTER>

Checking the manifest to see if you have a complete distribution...
The distribution is complete.
```

At this point, the software has been installed, but not yet configured. The **`fore_install`** program continues as presented in the following section.

3.2.6 Driver Configuration for Solaris

In most cases, the **fore_install** program will automatically handle driver configuration. Please contact FORE Systems' Technical Support for assistance if the **fore_install** program encounters a system configuration it cannot handle.

3.2.6.1 Typical Configuration Session

The following screens address questions that must be answered for proper driver configuration, and contain samples of the text that will appear on your screen during file modification and configuration. User inputs to prompts you will receive are indicated in bold e.g., **engineering <ENTER>**.

NOTE

If there is a default response to a given prompt, it will appear in brackets **[ ]**. The user may accept the default response by pressing the **<ENTER>** key.

This example assumes that you are configuring both LAN emulation services and clients. The actual session for your installation will reflect the configuration that you wish to implement. Detailed explanations of the questions and answers presented below appear in Section 3.2.6.2.

```
Enter the name for the FORE ATM interfaces [fa]: <ENTER>

The interfaces will be called fa.

Installing new files...
```

A list of files will scroll by.

```
done.
Making the following files set group ID to group ...
```

A list of files will scroll by.

```
done.

The file /etc/devlink.tab has been correctly modified.
Okay to rename /etc/devlink.tab to /etc/devlink.tab.fore? [n]: y <ENTER>

Install FORE's SNMP agent? [y]: <ENTER>

Use the standard UDP ports for SNMP (161/162)? [y]: <ENTER>

Would you like to use ILMI for Address Registration? [y]: <ENTER>
Would you like to use ILMI for UNI auto-configuration? [y]: n<ENTER>

Enter UNI version to use for physical unit 0 [3.0/3.1]: 3.1<ENTER>

Enter UNI version to use for physical unit 1 [3.0/3.1]: 3.0<ENTER>

Enter UNI version to use for physical unit 2 [3.0/3.1]: <ENTER>
Modifying a copy of /etc/rc.boot...

Configure Classical IP? [n]: y<ENTER>
Configure virtual interface qaa0 [y] <ENTER>
Enter the ATM address for the ARP server for qaa0
0x47.0005.80.ffe100.0000.f115.0bab.002048102fe4.00<ENTER>
Configure virtual interface qaa1 [y] n <ENTER>

Would you like to configure LAN Emulation? [n]: y<ENTER>
```

The following portion of the script represents a typical new LAN Emulation configuration. If you answered **n** to the previous question, this section of the installation script will not appear. Responses to the following questions are system-specific and must be determined by the system administrator prior to configuring an emulated LAN.

NOTE

If you wish to configure only LECs, answer **n** to the questions presented in the Services Configurations section. If you wish to use an LECS, the system-specific information must also be entered in the LECS configuration file. This may be done either with the *VLAN Manager*, or with an editor as described in Chapter 6.

```
=====================================================================
                FORE Systems LAN Emulation Configuration
=====================================================================
***** No Configuration Information *****

Would you like to run an LECS on this host? [n] y<ENTER>
Enter the LECS configuration file pathname [/etc/fore/lecs.cfg]: <ENTER>
Enter the LECS Selector octet : 0x10<ENTER>
Enter the LECS Adapter number [0]: <ENTER>
Would you like to suppress the LECS well-known address? [n] <ENTER>

Would you like to run LES's and/or BUS's on this host? [n] y<ENTER>
(0): LES, BUS, or LES/BUS pair <les/bus/pair> (return to end): pair<ENTER>
(0): Enter the LES Selector octet : 0x20<ENTER>
(0): Enter the BUS Selector octet : 0x30<ENTER>
(0): Enter LES/BUS Server Name: engineering<ENTER>
(0): Enter LAN type <[ethernet]/token-ring>: <ENTER>
(0): Enter max frame size <[1516]/4544/9234/18190>: 18190<ENTER>
(0): Enter adapter number [0]: <ENTER>
(1): LES, BUS, or LES/BUS pair <les/bus/pair> (return to end): <ENTER>
```

```
Would you like to use an LECS to retrieve configuration information? [y] <ENTER>
Use the “Well-Known” LECS address? [y] <ENTER>

An Automatic ELAN is a special case, where you do not specify
the ELAN to join. The ELAN is decided by the Administrator by
configuring the LECS database.
Would you like to configure a Automatic ELAN? [y] <ENTER>
Enter Adapter number [0]: <ENTER>
Enter Interface name [el0]: <ENTER>

Enter ELAN name to configure (return to end):
=====================================================================
Current Configuration Information ...

Service:                 LECS
  Configuration file:  /etc/fore/lecs.cfg
  Selector octet:      0x10
  Adapter Number:      0
Service:                 LES/BUS pair
  LES Selector octet:  0x20
  BUS Selector octet:  0x30
  Server Name:         "engineering"
  LAN type:            ethernet
  Max frame size:      18190
  Adapter Number:      0

LECS ATM Address       “Well-Known”

ELAN:                    Automatic ELAN
  Adapter Number:        0
  Interface Name:        el0
=====================================================================
Do You Want To Modify Configuration Information? [n] <ENTER>
Save Configuration Information? [y] <ENTER>
Saving /etc/fore/fore_lanem.conf ...
```

This ends the LAN emulation configuration part of the script. The remaining portion of the script will appear whether you chose to configure LAN emulation or not.

```
Attempting to remove an old driver... done.

Adding the driver to the system... done.

Adding alias ‘FORE,fa’ for driver ‘fore_atm’... done.

The configuration and installation of the new FORE ATM driver has been
completed. For these changes to take effect, the system must be rebooted.
When system reboots, a message similar to the following should appear in
the diagnostic messages (in /var/adm/messages, or viewed with ‘dmesg’):

        FORE,sba-200e0 at sbus0: SBus slot x 0x400000 and SBus slot x 0x800000
         and SBus slot x 0xc00000 and SBus slot x 0x1000000 SBus level 2
         sparc ipl 3

Automatically reboot the system now? [y]: <ENTER>

After the machine successfully reboots, please remember to follow
Section 4.1, Network Interface Configuration” of the User’s Manual.
```

3.2.6.2 Configuration Script Questions and Responses for Solaris

While running the installation script with the **`fore_install`** command, you will be prompted for answers to a number of questions that will customize your ATM configuration. These questions are shown below in `courier` font. During your individual software configuration, you may not see all of the questions. The prompts that you do see depend on your environment and on answers to previous questions. In this section, the question will be shown first, and the explanations of effects of the possible replies are shown after the questions. A sample configuration session is shown in Section 3.2.6.

```
Enter the name for the FORE ATM interfaces [fa]:
```

The ATM interface will be called **`fa`** or the specified name.

Some messages will then appear on-screen, finishing with:

```
The file /etc/devlink.tab has been correctly modified.
Okay to rename /etc/devlink.tab to /etc/devlink.tab.fore [n] Y
```

Answering **`y`** will copy the old **`devlink.tab`** file to **`devlink.tab.fore`** and write the new **`devlink.tab`**.

```
Install FORE's SNMP agent? [y]
```

If you use the SNMP agent supplied by FORE Systems, you will have access to the FORE Systems Management Information Base (MIB). Using this in conjunction with applications such as ForeView, or other network management applications, enables you to remotely monitor your SBA-200E. Answering **`y`** to this question will cause **`snmpd`** to run. It is started from the script **`S99rc.sba200`** in the directory **`/etc/rcS.d`** or the specified directory. Answering **`n`** to this question will suppress execution of **`snmpd`**, and will circumvent the next three questions in the installation script.

```
Use the standard UDP ports for SNMP (161/162)? [y]
```

SNMP agents generally use port 161 to receive queries, and port 162 to send trap messages. Only one agent can bind to these ports at a time. Therefore, in order to run a vendor-supplied SNMP agent at the same time as FORE's SNMP agent, one agent must run on a different set of ports. If you do not wish to run both SNMP agents, reply to this question with a **`y`**. If you must run both, reply to this question with a **`n`** and continue with the next two questions.

```
UDP port to use to receive SNMP messages not containing TRAP-PDUs:
UDP port to use to send SNMP messages containing TRAP-PDUs:
```

These two statements prompt for new UDP port numbers to use for SNMP queries and trap messages. In addition to supplying the new port numbers here, you must also configure any network management applications, such as ForeView, to query the agent using the new ports.

```
Would you like to use ILMI for Address Registration? [y]:
```

The Interim Local Management Interface (ILMI) is a protocol used to dynamically assign an ATM address to a UNI 3.0 or 3.1 port. This ATM address is used in UNI 3.0 and 3.1 signalling messages to identify the workstation. If you plan to use UNI 3.0 or 3.1 signalling, it is recommended that you respond **y** to this question. If you choose to reply **n** and you will be using UNI 3.0 or 3.1 signalling, you will need to manually configure an ATM address in the host and in the switch to which it is connected. You will be prompted for the ATM address of the host later in the installation process. See Section 5.2 for more information about ILMI and address registration.

ILMI is implemented as part of FORE Systems' SNMP agent. If you have chosen not to run this agent, you can still use ILMI. In this case, **snmpd** will be renamed to **ilmid**, and only the ILMI protocol will be active. If you have chosen to run FORE Systems' SNMP agent as well as ILMI, both protocols will be active. Either **snmpd** or **ilmid** is executed on bootup from the script **rc.sba200** in the directory **/usr/etc/fore** or the user specified directory.

```
Would you like to use ILMI for UNI auto-configuration? [y]:
```

Answering **y** allows ILMI to auto-configure the UNI version. Answering **n** results in the following question:

```
Enter UNI version to use for physical unit 0 [3.0/3.1]:
```

Respond with the UNI version that you wish the adapter 0 to use (**3.0** or **3.1**).

```
Enter UNI version to use for physical unit 1 [3.0/3.1]:
```

This promt appears if a second ATM adapter is present in your system. This prompt will be repeated for each ATM adapter present in your system.

```
Configure Classical IP? [n]
```

Classical IP is a standard method for sending and receiving IP traffic over an ATM network. This protocol utilizes Q.2931 signalling to set up and tear down connections to other IP stations. If you would like to use this protocol, respond **y** to the question. Otherwise, respond with **n**.

```
Configure virtual interface qaa0? [y]
```

qaa0 is the name of an interface which will support Classical IP. If you will be using Classical IP, you should configure **qaa0** by replying with **y**, then entering the ATM addresses as requested by the next two prompts. After configuration of **qaa0** is complete, you will be prompted for configuration of **qaa1**. If you would like more than one Classical IP interface, reply **y** to the question about **qaa1**. If you would only like one interface, reply **n**. You will also be prompted to configure **qaa2**, and then **qaa3**, if you have configured all of the previous interfaces.

```
Enter the ATM address for the ARP server for qaa0
```

The ARP server ATM address must be configured into each workstation (including the ARP server itself). It is suggested that you first configure the ARP server, and then configure all other hosts with the ARP server's ATM address. ARP server configuration is covered in detail in Chapter 5.

Any FORE Systems host or switch has the ability to be the ARP server for a network. You must have exactly one ARP server on each Classical IP network. You configure a host or switch to be the ARP server by specifying its ATM address as the ARP server's ATM address. When the host or switch sees that its ATM address matches the ARP server's ATM address, it will start acting as the ARP server for that Classical IP network.

The ATM address should be supplied by your system administrator. It is a 20 byte number, and must be unique. You should input it using 40 hexadecimal digits. You may precede the ATM address with a "**0x**", and you may use dots (periods) as separators, but neither is necessary. As an example:

```
0x47.0005.80.ffe100.0000.f115.0bab.002048102fe4.00

47.0005.80.ffe100.0000.f115.0bab.002048102fe4.00

47000580ffe1000000f1150bab002048102fe400
```

are all valid ATM addresses. If not using ILMI, remember that you must also configure this ATM address in the switch to which this host is directly connected.

When using ILMI for address registration on the ARP server, you will not know the ATM address that ILMI has assigned until installation is complete and the machine has rebooted. Until then, you should enter a temporary ATM address, such as **1111111111111111111111111111111111111111**, (a 40 character string of ones) in response to this prompt. You can then continue with the installation and reboot the machine.

After rebooting, determine the ATM address for the host by issuing the following command:

/usr/fore/etc/atmarp -z qaa0

Use the command:

/usr/fore/etc/atmarp -g qaa0

to get the ATM address of the ARP server.

Then, you should rerun the kernel configuration script, entering the correct ATM address in response to the prompt. In either case, you should reboot your machine again so that the change will take effect.

NOTE

Write down the ARP server ATM address, because you will need it to configure each of your workstations.

If you are not using ILMI for address registration, your system administrator will be able to supply you with the ATM address of the ARP server. Use this number in response to the prompt.

```
Configure qaa1? [y]
```

qaa1 is the name of next interface which will support Classical IP. If you will be using Classical IP and would like more than one Classical IP interface, you should configure **qaa1** by replying with **y**, then entering the ATM addresses as requested by the next two prompts. After configuration of **qaa1** is complete, you will be prompted for configuration of **qaa2**. If you would like more than two Classical IP interfaces, reply **y** to the question about **qaa2**. If you would only like two interfaces, reply **n**. You will also be prompted to configure **qaa3**, if you have configured all of the previous interfaces.

```
Would you like to configure LAN Emulation? [n]
```

If you answer **y**, the **configure_lanem** script will execute. The sample session shown in Section 3.2.6 is described below.

```
=====================================================================
                FORE Systems LAN Emulation Configuration
=====================================================================

***** No Configuration Information *****
```

If LAN Emulation has not been configured previously, the **No Configuration Information** message appears. If emulated LANs have been configured, current configuration information will appear, followed by the next question.

```
Do You Want To Modify Configuration Information? <y/[n]>
```

If you wish to configure or modify LAN Emulation, respond with **y**. Answering **n** ends the LAN Emulation Configuration process.

```
Would you like to run an LECS on this host? [n]
```

If you wish to run a LAN Emulation Configuration Server (LECS) on the host system, respond with a **y**. System-specific information must also be entered in the LECS configuration file. This may be done either with the *VLAN Manager*, or with an editor as described in Chapter 6.

NOTE

Detailed information on the implementation and configuration of the LECS is available in the on-line **`lecs`** man page. The **`lecs`** man page text is also available for reference in Chapter 8 of this manual.

If you respond with an **`n`**, the next three prompts will not appear.

NOTE

The following prompts include requests for input of various selector octet values. These values may be entered in decimal format(default) or in hexadecimal format. If hexadecimal format is used, the value must be preceded by **`0x`**. Valid numbers are **`0`** through **`255`** decimal or **`0x0`** through **`0xff`** hexadecimal.

```
Enter the LECS configuration file pathname : /sbin/fore/lecs.cfg
```

Enter the path and name of the configuration file that the LECS is to use. The path and name given in the example point to the default LECS configuration file installed with the supplied software.

```
Enter the LECS Selector octet :
```

Enter the value for the selector byte of the ATM address of the LECS.

```
Enter the LECS Adapter number [0]:
```

Enter the unit number of the ATM adapter that is the host of the LECS.

```
Would you like to suppress the LECS well-known address? [n]
```

Answer **`y`** if you wish to suppress the default LECS well-known address.

```
Would you like to run LES's and/or BUS's on this host? [n]
```

If you wish to run a LAN Emulation Server (LES) and/or a Broadcast and Unknown Server (BUS) on this host, answer **`y`**.

NOTE

Detailed information about the establishment and use of the LAN Emulation Server (LES) and Broadcast and Unknown Server (BUS) is available in the on-line **`le`** man page. The **`le`** man page text is also available for reference in Chapter 8 of this manual.

NOTE

The zeroes in parentheses at the beginning of the following prompts signify that this is the first instance of a LES, BUS, or LES/BUS pair being configured. This value increments each time that these prompts appear, signifying the establishment of an additional LES, BUS, or LES/BUS pair.

```
(0): LES, BUS, or LES/BUS pair <les/bus/pair> (return to end):
```

This prompt allows you to configure a LES, BUS, or LES/BUS pair on this host. Valid entries are **les**, **bus**, and **pair**. Pressing the return key without an entry will bypass this part of the configuration.

```
(0): Enter the LES Selector octet :
```

This prompt will appear if the user answered the **LES**, **BUS**, or **LES/BUS pair** prompt with either **les** or **pair**. Enter the value for the selector byte (octet) of the ATM address of the LES.

```
(0): Enter the BUS Selector octet :
```

This prompt will appear if the user answered the **LES, BUS, or LES/BUS pair** prompt with either **bus** or **pair**. Enter the value for the selector byte (octet) of the ATM address of the BUS.

```
(0): Enter LES/BUS Server Name:
```

Enter the name (**engineering**, for example) you wish to assign to the LES/BUS Server that you are configuring.

```
(0): Enter LAN type <[ethernet]/token-ring>:
```

Enter the LAN type that you wish to emulate. The default is **ethernet**.

```
(0): Enter max frame size <[1516]/4544/9234/18190>:
```

Enter the maximum frame size that will be permitted on the LAN type that you are emulating. The default is **1516**.

```
(0): Enter adapter number [0]:
```

Enter the unit number of the host adapter for the ELAN services that you are configuring.

NOTE

Detailed information about the establishment of an emulated LAN (ELAN) is available in the on-line **elconfig** man page. The **elconfig** man page text is also available for reference in Chapter 8 of this manual. Note that a host may join more than one ELAN. A LEC must be configured for each ELAN that you wish to join.

```
Would you like to use an LECS to retrieve configuration information? [y]
```

Answer **y** to this question if you wish the local LAN Emulation Client (LEC) to use an LECS to retrieve configuration information. Answer **n** if you wish the local LEC to use an LES that you specify for configuration information. The following question will not appear if you answer **n**.

```
Use the "Well-Known" LECS address? [y]
```

Answering **y** to this question instructs the local LEC to use the default (**"well known"**) ATM address for communicating with the LECS. If you answer **n**, you will be prompted to enter the ATM address of the LECS that the LEC is to use.

```
An Automatic ELAN is a special case, where you do not specify
the ELAN to join. The ELAN is decided by the Administrator by
configuring the LECS database.
Would you like to configure a Automatic ELAN? [y] <ENTER>
```

Answer **y** if you wish to configure an Automatic ELAN. If you answer **n**, the following two prompts will not appear.

```
Enter Adapter number [0]: <ENTER>
Enter Interface name [el0]: <ENTER>
Enter ELAN name to configure (return to end):
```

The name of the emulated LAN that you wish to configure (for example, **marketing**) is entered in response to this prompt.

```
Enter LES address Manually? [n]
```

Answer **y** if you wish to enter the ATM address that the ELAN named in the previous prompt is to use when communicating with the LES. Answer **n** if you wish ELAN members to use the LECS to discover the ATM address of the ELAN's LES.

```
Enter ELAN name to configure (return to end):
```

If you wish to configure another ELAN, enter the ELAN name here. If you are finished configuring ELANs, press the return key to end ELAN configuration. The script then presents the current LAN emulation configuration similar to the following:

```
=====================================================================
Current Configuration Information ...

Service:                 LECS
  Configuration file:  /etc/fore/lecs.cfg
  Selector octet:      0x10
  Adapter Number:      0
Service:                 LES/BUS pair
  LES Selector octet:  0x20
  BUS Selector octet:  0x30
  Server Name:         "engineering"
  LAN type:            ethernet
  Max frame size:      18190
  Adapter Number:      0

LECS ATM Address:        0x00.0000.00.000000.0000.0000.0000.000000000000.00

ELAN:                    Automatic ELAN
  Adapter Number:        0
  Interface Name:        el0
=====================================================================
Do You Want To Modify Configuration Information? [n]
```

Answer **y** if you wish to change, delete, or add LAN emulation configuration information. Answering **n** produces the following prompt.

```
Save Configuration Information? [y]
```

Answer **y** if you wish to save the configuration information that you have entered. The system responds with a line indicating the configuration information is being saved in a file called **fore_lanem.conf**. Answer **n** if you wish to abort the LAN emulation configuration information that you have entered.

Once all the desired interfaces are configured, progress messages will appear, indicating the driver is loading. The last message to appear will be:

```
Automatically reboot the system now [y]:
```

Answering **y** will reboot the system with the newly installed driver.

3.3 System Reconfiguration for Solaris

Prior to reconfiguring the SBA-200E system hardware (i.e., adding a card, moving a card, removing a card) under Solaris you must run the **fore_reconfig** program. The **fore_reconfig** program reconfigures the necessary system files to prepare for a change in FORE hardware.

1. Run the **fore_reconfig** program. The following screen shows a typical session. Recommended user inputs appear in **bold** type:

```
FORE Systems ATM Adapter Reconfiguration

This utility will reconfigure the necessary system files to
prepare for a change in FORE adapter hardware.

Proceed? [n]: y <ENTER>

Modifying a copy of /etc/path_to_inst...

The file /etc/path_to_inst has been correctly modified.
Okay to rename /etc/path_to_inst to /etc/path_to_inst.fore? [n]: y <ENTER>

The system can now be shutdown to reconfigure the FORE hardware.

Automatically shutdown the system now? [y]: <ENTER>
```

2. Halt the system, and remove power.
3. Make the hardware change(s).
4. Reapply power to the system.
5. At the “ok” prompt, reboot using the following command to ensure that the hardware change(s) are recognized by the system:

boot -rv

3.4 Changing Buffer Space

With the Solaris 2.4 and 2.5 operating system, you may change the size of the default send and receive buffer space. Prior to issuing these commands, you must be logged in as **`root`**.

NOTE It is recommended that both buffer spaces be set to the same size. The buffer space directly influences the TCP windows.

3.4.1 Send Buffer

To increase the send buffer space, issue the following command at a system prompt:

```
ndd -set /dev/tcp tcp_xmit_hiwat <send_space (in bytes)>
```

where the default is 8192 (8K) and the maximum is 65536 (64 K).

3.4.2 Receive Buffer

To increase the receive buffer space, issue the following command at a system prompt:

```
ndd -set /dev/tcp tcp_recv_hiwat <send_space (in bytes)>
```

where the default is 8192 (8K) and the maximum is 65536 (64 K).

CHAPTER 4 Network Interface Administration

This chapter provides network configuration information such as assigning an IP address, configuring your workstation as a multi-homed or ATM only workstation, and dynamic and static IP routing information for a multi-homed workstation.

4.1 Network Interface Configuration

After installating the SBA-200E hardware and software, some additional configuration tasks must be performed before using the SBA-200E as an ATM network interface. First, a unique, legal IP address must be assigned to the network interface. The Internet address that is assigned to the SBA-200E interface should be within the subnet that is assigned to the ATM LAN by the system administrator.

If you are unsure of how to do so, it is strongly recommended that you consult the Sun *System and Network Administration Manual* for more information about creating and configuring subnets. You should also consult your system administrator for additional help.

NOTE

The adapter cards receive only on VPI=0 (incoming virtual path). The incoming VCI may be from 1 through 1023.

4.1.1 Network Interface Naming Conventions

The default name for a FORE IP interface is **fa0**. Subsequent interface names are **fa1**, **fa2**, and so on, depending on the number of installed adapter cards.

The default name for an emulated LAN interface is **el0**. Subsequent interface names are **el1**, **el2**, and so on, depending on the number of installed ELANs.

For a Classical IP interface, the naming convention begins with the prefix **qa**. Subsequent letters or numbers denote the physical unit number and/or the interface number:

- All Classical IP interfaces associated with physical unit zero have **a** as the next letter.
- All Classical IP interfaces associated with physical unit one have **b** as the next letter, and so forth.
- Each Classical IP interface has its virtual interface number as a suffix.

For example, using this naming convention, the name of the third Classical IP interface (virtual unit 2) on physical unit one is **qab2**.

NOTE

Throughout this chapter, when an example uses the interface name **fa0**, any **qaxx**, or **elx** interface name could also be used.

4.1.2 Bringing up the SBA-200E Network Interface

After you have successfully installed the SBA-200E, configured the kernel, and established an Internet address for the SBA-200E interface, you can configure the SBA-200E network interface by typing:

ifconfig fa0 *<internet address>* **netmask + broadcast + up <ENTER>**

Please note that the **ifconfig** line may differ from this example if you are using a separate subnet for your ATM LAN. Specifically, the arguments for netmask and broadcast may be different from this example. (See also the **ifconfig(1M)** man page.)

Once you have configured the interface, use the **ping** command to verify your connection and to confirm the presence of others connected to the network.

4.1.3 Assigning IP Addresses During Reboots

To have your workstation correctly assign the IP addresses during reboots, use the following commands:

```
cp /etc/hostname.le0 /etc/hostname.aa0

echo IP_hostname_of_ATM_interface > /etc/hostname.fa0
```

For example, if your workstation is ws2 on the ethernet and ws2-atm on the ATM IP network, the correct commands would be:

```
cp /etc/hostname.le0 /etc/hostname.aa0

echo ws2-atm > /etc/hostname.fa0
```

6. You must also edit the **/etc/hosts** file on your workstation to add the IP hostname to address mapping for the *IP_hostname_of_ATM_interface*.

4.2 SBA-200E Adapter in an Internet Protocol Network

The SBA-200E device driver supports the TCP/IP protocol suite as well as the ATM API. In order to use your SBA-200E adapter card in an IP network, you must set your workstation in one of two configurations:

1. Multi-homed with a network attachment to both ATM and Ethernet (or other legacy network technology)
2. ATM network only

This chapter assumes a working knowledge of TCP/IP, and, in particular, IP addressing and routing issues.

In the following discussion, two example Class C IP network addresses have been used. The network address **`aaa.aaa.aaa.XX`** is the ATM IP network, and the network address **`eee.eee.eee.XX`** is the Ethernet network. The network portion of the IP address must be different for the ATM and Ethernet networks.

A FORE Systems ASX switch can be configured to be multi-homed (i.e., both an ATM and Ethernet network attachment), and can be used to route IP traffic between the ATM and Ethernet networks.

NOTE The addresses used should be specific to your network topology.

To proceed with your network configuration, you need access to the following information:

- IP network number for the ATM network
- IP network addresses and names for each ATM and Ethernet interface. If you are installing the SBA-200E adapter card into a multi-homed environment, your Ethernet interface is probably already installed correctly.

NOTE This text does not describe the steps required for the use of IP subnets. Consult your system administrator for this information.

4.2.1 Multi-homing on ATM and Ethernet Networks

If you wish to have your workstation reside on both an ATM and Ethernet network, you must assign an IP hostname and address on different networks to each interface. Figure 4.1 illustrates the basic network topology for this type of configuration. In this example, to access the workstations on the ATM or Ethernet side of the network, you need only specify the IP hostname or address of the specific workstation.

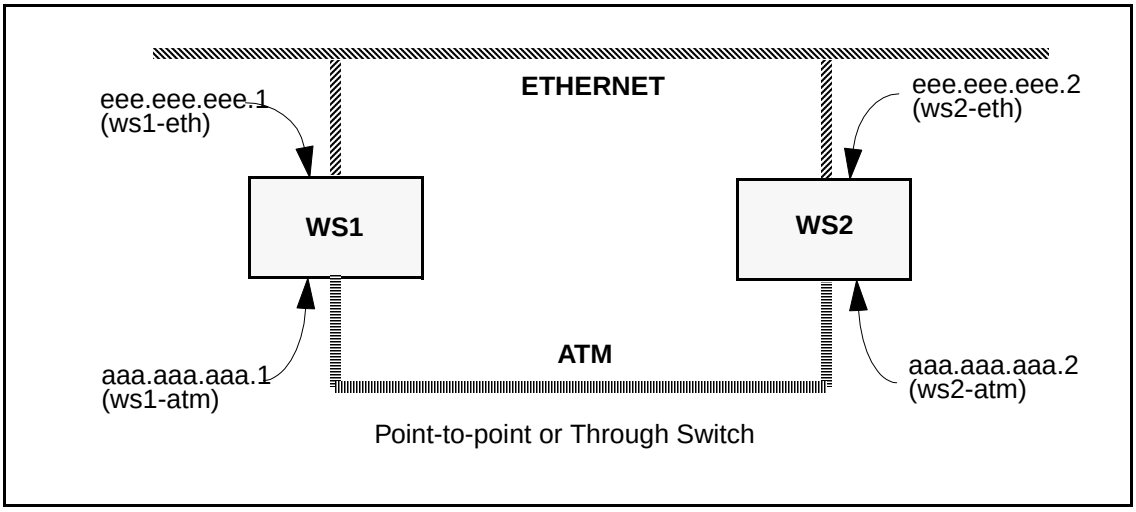

Figure 4.1 - Multi-homing Network Configuration

The following is an example of multi-homing, using the ftp command to transfer a file, using either ATM or Ethernet. In this example, ws2 is the workstation to which you want to connect. To use the **ftp** command over ATM, type:

```
ftp ws2-atm
```

To use the **ftp** command over Ethernet, type:

```
ftp ws2-eth
```

4.2.2 Configuring a Workstation as ATM-Only

If you wish to have a workstation on an ATM-only network, but still have access to workstations outside the ATM network, you need to add an ATM-to-Ethernet router and perform additional configuration to your workstation, the ASX ATM switch, and also the external workstation(s). Specifically, you need to configure your workstation and switch to enable them to recognize and reach the external workstation. The external workstation needs the same capabilities. Figure 4.2 below illustrates a basic network topology for this type of configuration.

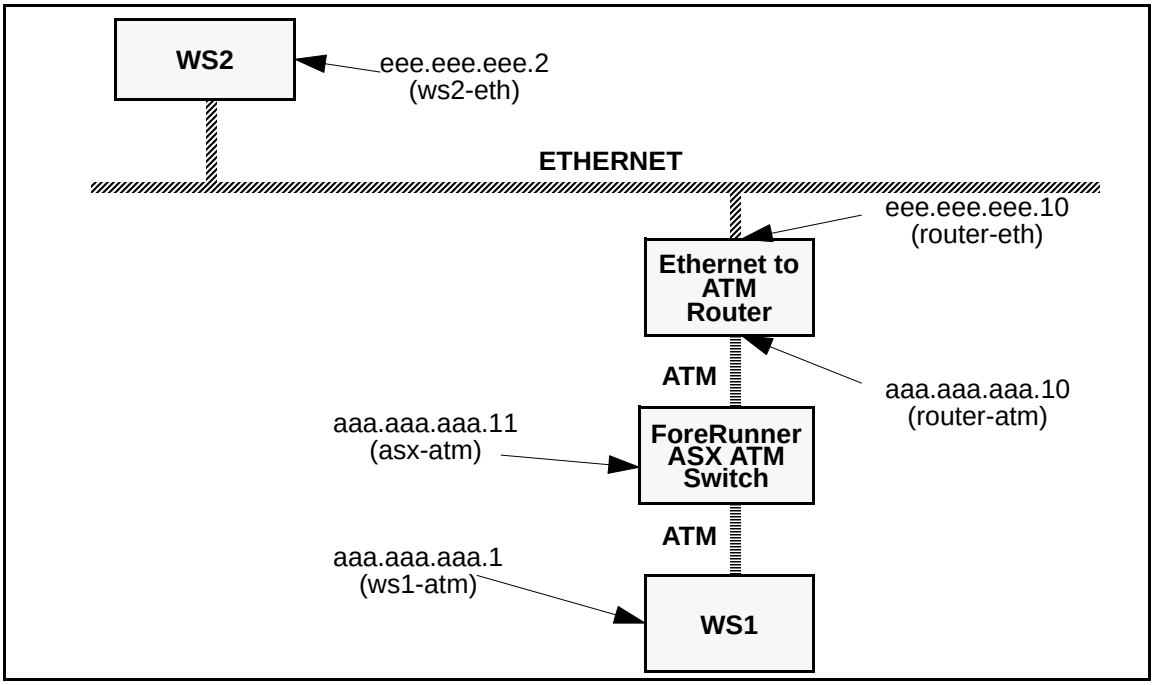

Figure 4.2 - ATM Network with Access to Ethernet

As before, you need to assign an IP address to your ATM interface on the ATM-only workstation. In this topology, the ATM-to-Ethernet router is used to route IP traffic between the ATM and Ethernet networks.

To use the network in this configuration, you must set up the IP routing. There are two ways to handle the IP routing: dynamically and statically. The following section outlines these methods.

4.2.3 Dynamic and Static IP Routing (ATM-Only Network)

4.2.3.1 Dynamic Routing

To use dynamic IP routing, the IP routing daemon (**routed**) must be run on all the workstations in the network that are multi-homed. The routing daemon “listens” for routing information and update its routing tables accordingly.

If the routing daemon is used, the ATM-only workstation should be able to communicate to the Ethernet network nodes as soon as the routing tables are updated (typically every thirty seconds or so).

4.2.3.2 Static Routing

To set up a static route, first disable the routing daemon by preventing it from running. Then establish either a default route or a specific route, on both the ATM-only workstation and the Ethernet workstation.

1. To set up a default route, type the following on the ATM-only workstation:

```
route add default router-atm 1
```

2. Then type the following on the Ethernet workstation:

```
route add default router-eth 1
```

To maintain this default route, simply add the destination into the file **/etc/defaultrouter**. If you do not wish to use a default route, you can also use a specific route to accomplish the correct routing.

1. To do so, type the following on the ATM-only workstation:

```
route add -net eee.eee.eee router-atm 1
```

2. Then type the following on the Ethernet workstation:

```
route add -net aaa.aaa.aaa router-eth 1
```

3. Once a route has been established, you should be able to **ftp** files between the Ethernet workstation and the ATM-only workstation by typing the following on the ATM host:

```
ftp ws2-eth
```

To maintain this route across a reboot, add the appropriate “route” command to your **/etc/rc.local** file on SunOS and to **/etc/rc2.d/S69inet** file on Solaris.

4.2.4 Disabling Signalling

If your SBA-200E adapter is connected to a SPANS-capable device (such as a ForeRunner ASX ATM switch), you may ignore this step in configuring the IP PVC. If your SBA-200E adapter is not connected to another SPANS-capable device, such as a *ForeRunner* ASX ATM Switch, you must disable SPANS signalling in the device driver for that unit. Disabling the signalling informs the device driver that it may send and receive cells without knowing its physical address, which is typically supplied by the SPANS-capable device.

The **atmconfig** command can enable, disable, or report on the state of signalling (SPANS, UNI 3.0, and UNI 3.1) for a particular unit. The syntax is as follows:

atmconfig <device>	display current configuration
atmconfig -s on <device>	enable SPANS signalling
atmconfig -s off <device>	disable SPANS signalling
atmconfig -u 30 <device>	enable UNI 3.0 signalling
atmconfig -u 31 <device>	enable UNI 3.1 signalling
atmconfig -u auto <device>	instructs the device to contact the switch to determine the appropriate version of UNI signalling to use. **auto** is the default setting.
atmconfig -u off <device>	disable UNI signalling

For example, to disable SPANS signalling on device **fa0**, enter the following command:

```
atmconfig -s off fa0
```

The configuration may then be checked by again using **atmconfig** to display the current configuration:

atmconfig fa0

```
Interface configuration
-----------------------
MTU:    9188
ESI:    0020480B009C

FORE IP configuration
---------------------------
Multicast:              enabled
SVC rate:              (unlimited)
Load balancing/Failover:enabled
Groups: (0*, 2) (1)
Failover poll interval:5
Failover poll duration:10

UNI configuration
-----------------
UNI Signaling:         version=3.0 vpi=0 vci=5
auto-configuration:    on

SPANS configuration
-------------------
SPANS:  disabled vpi=0 vci=15
CLS:    disabled vpi=0 vci=14
```

For more information on the **atmconfig** command, see Section 4.4.

4.2.5 Configuring an Outgoing IP PVC

The first step in configuring an IP PVC connection is to set up the outgoing link to the destination IP host. The following parameters need to be determined before you configure this part of the connection: outgoing device (typically **fa0**), destination IP hostname or address, VPI, VCI and AAL type (3/4 or 5). Once these have been determined, the **atmarp** command is used to configure the outgoing link using the supplied parameters as follows:

```
atmarp -s destination_ip_hostname device vpi vci aal_type
```

For example, to set up an outgoing connection from ws1-atm to ws2-atm using the **fa0** device, VPI of 0, VCI of 100 and AAL5, you would specify on host ws1-atm:

```
atmarp -s ws2-atm fa0 0 100 5
```

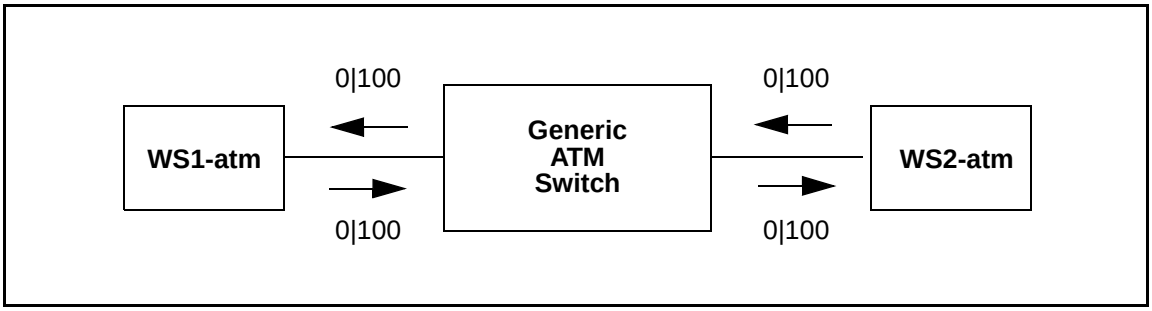

Figure 4.3 - IP Permanent Virtual Circuit

You also need to set up an equivalent outgoing connection from ws2-atm to ws1-atm using the **fa0** device. To set up this connection with VPI of 0, VCI of 100 and AAL5, type the following on host ws2-atm:

```
atmarp -s ws1-atm fa0 0 100 5
```

4.2.6 Configuring an Incoming IP PVC

The second step in configuring an IP PVC connection is to link an incoming VPI/VCI to the IP queue (see Figure 4.3). The following parameters should be determined before configuring this part of the connection: incoming device, VPI, VCI, and AAL type (3/4 or 5). Once these have been determined, the **atmarp** command is used to configure the incoming link using the parameters as follows:

```
atmarp -l device vpi vci aal_type
```

For example, to set up an incoming connection to ws1-atm from ws2-atm using the **fa0** device, VPI of 0, VCI of 100 and AAL 5, you would enter the following on host ws1:

```
atmarp -l fa0 0 100 5
```

This command links cells coming in on device **fa0**, on VPI/VCI of 0/100 using AAL5 to the IP queue on ws1-atm.

Similarly, to set up the incoming connection to ws2-atm from ws1-atm using the **fa0** device, VPI of 0, VCI of 100 and AAL 5, you would enter the following on host ws2:

```
atmarp -l fa0 0 100 5
```

This command links cells coming in on device **fa0**, on VPI/VCI of 0/100 using AAL5 to the IP queue on ws2-atm.

For more information about the **atmarp** command, see Section 4.3.

4.2.7 Verifying the PVC Configuration

The **atmarp** command can also be used to view the ARP cache in the device driver. This command can be used to view the ARP cache entry of the newly created PVC for verification. To view the ARP cache, enter:

atmarp -a

The following is displayed:

```
Outgoing connections:
fa0: ws2-atm (198.29.21.74): vpi.vci=0.100 aal=5
        switch.port=-.-
        flags=(PVC) encapsulation=NULL peak rate=(unlimited)
Incoming connections:
fa0: switch.port=-.- vpi.vci=0.100 aal=5 flags=(PVC) decapsulation=NULL
```

For a SPANS PVC, the incoming and outgoing connection appears in the output with the "flags" indicating that this entry is a PVC. With a Classical IP PVC, there is only an entry in the "Outgoing" section.

For more information about the **atmarp** command, see Section 4.3.

4.2.8 IP Multicasting Support

NOTE The OS must support IP multicasting or have IP multicasting extensions installed.

Multicasting support per RFC 1112 specification is a standard feature. Multicasting is performed by the switch hardware. Multicasting can be performed over SVCs as well as PVCs. Multicast SVCs are created using the SPANS-UNI and SPANS-NNI protocols. Multicasting is also supported for LAN emulation.

Applications wishing to use multicast SVCs join and leave multicast groups under their own control can use the standard socket options:
IP_ADD_MEMBERSHIP and **IP_DROP_MEMBERSHIP**.

NOTE FORE IP multicasting is only available on platforms with OS support for IP multicast.

All Internet Group Membership Protocol (IGMP) messages are transmitted to all members of an IP multicast group using the connectionless service. This drastically reduces the number of VCs required (in the ATM network) for IP multicast support since a host which is strictly receiving from a group need not have a connection open for transmission to the group.

When a host opens a connection to transmit to an IP multicast group, it automatically adds the address DVMRP.MCAST.NET (224.0.0.4) as a member of that group. Since all IP multicast routers are members of the DVMRP.MCAST.NET group, routers now have the ability to route IP multicast packets from an ATM network to other networks.

There are two modes possible for PVCs. In the first case, a PVC is created for every multicast group to which the host wishes to send traffic. In the second case, one PVC is created to transmit traffic for all groups. This PVC can be viewed as the default multicast PVC. That is, if an explicit ATM ARP table entry is not found for a given IP multicast address, traffic is sent on the default multicast PVC if it exists.

If a default multicast PVC does not exist, the host driver will automatically attempt to create a multicast SVC. Extensions to the host adapter management tool **`atmarp`** (see Section 4.3) were made to support multicast PVCs.

4.2.9 IP Load Balancing and Automatic Failover across Multiple Adapters

IP load balancing can make multiple adapters appear to be a single network interface. When load balancing is enabled, all IP traffic traveling over SVCs and destined for an ATM network is automatically balanced (at connection set-up time, based upon the total peak bandwidth of all connections through an interface) across all FORE ATM interfaces attached to that same physical network. Balancing occurs on both incoming and outgoing connections, across different series and speeds of FORE adapters.

IP load balancing can also provide a means of fault tolerance called Automatic Failover. If an interface is configured down, all IP SVCs currently using that interface are closed. New connections are created on demand, and balanced across all interfaces currently alive. When an interface fails, all connections across it are broken. Therefore, fault-tolerant applications must account for the possibility of broken connections.

NOTE

Load balancing should be off (i.e., not used) when using the API library functions. Refer to the **atm_gethostbyname(4N)** man page for more details.

The command **atmconfig -b** is used to enable and disable IP load balancing and automatic failover (IP load balancing and automatic failover are enabled by default.). The **atmconfig -g** command is used to set the frequency at which the network interface is verified to be operational (default is five seconds). The **atmconfig -h** command sets the time to spend retrying a failed interface before declaring the interface down(default is ten seconds). Section 4.4 contains complete information on **atmconfig**.

NOTE

For purposes of bandwidth comparison, all Unspecified Bit Rate (UBR) IP connections are assumed to have a peak rate of 50 Mbps. The specific IP addresses assigned to multiple interfaces are not important to the load balancing operation. Each of the interfaces may be configured to be on the same subnet or different subnets.

4.2.10 Settable Peak Cell Rate for FORE IP SVCs

The peak cell rate for FORE IP SVCs can be set. Traffic over all FORE IP SVCs opened on a given interface is limited to the peak cell rate specified for that interface. The **-q** option in **atmconfig**(8c) is used to set the peak cell rate to a specific value, or to turn off peak cell rate control.

The effect of this option differs for SBA-200 versus SBA-200E adapters. For example, on the SBA-200, the command **atmconfig -q 0** does not limit the peak cell rate. However, sending the same command to the SBA-200E sets the peak cell rate to the nearest supported rate (587K b/s). See Section 4.4 for more information.

4.2.11 MTU Size

An interface's maximum transmission unit (MTU) can be set up to 65535 bytes. Certain operating systems have maximum values for the MTU, which in some cases are much smaller than 65535 bytes (for example, the maximum MTU size for the FORE API under SunOS 4.1.3 is 32763). On these systems an attempt to increase the MTU past the maximum value supported by the operating system results in the MTU being set to the maximum supported value. The default MTU is 9188 bytes for FORE IP interfaces, 9180 bytes for Classical IP interfaces, and 1516 bytes for an emulated LAN interface (**el0**, **el1**, **el2**, etc.). A 65535 byte MTU is supported for AAL types null (0), four (4), and five (5).

On Solaris systerms, to change the MTU of the Classical IP interface, you must add a line of the following form to the system configuration file (e.g., **/etc/system**):

set fore_atm:fore_classical_mtu=*<value>*

where *<value>* is the new Classical IP MTU value.

CAUTION

Caution should be used when increasing the MTU. A large MTU increases the probability of cell loss, which, therefore, increases the probability of packet loss due to reassembly errors. Cell loss may increase due to buffer overflow in the network and on the adapter cards.

4.2.12 User Configurable ATM Network Interface Name

The name to be used for all FORE IP/SPANS interfaces can be chosen during installation. This feature allows users to customize their environment, but more importantly it allows FORE interfaces to be installed successfully along with other vendors' products which hard code their name as **fa**.

NOTE

The interface name can be a maximum of eight characters, subject to possible limitations of specific operating systems.

4.3 atmarp(8c)

NAME

atmarp – manipulate Internet to ATM address mappings

SYNOPSIS

atmarp [**-N**] *hostname*

atmarp [**-N**] **–a**

atmarp –d *hostname*

atmarp –f

atmarp –s *hostname device vpi vci aal [encapsulation] [peak]*

atmarp –l *device vpi vci aal [decapsulation]*

atmarp –x *device vpi vci*

atmarp –c *hostname device vpi vci revalidate [peak]*

atmarp –r *hostname*

atmarp –m *device vpi vci aal [encapsulation] [peak]*

atmarp –u

atmarp –n *ATMaddress device*

atmarp –z *device*

atmarp –o *hostname ATMaddress device*

atmarp –p *ATMaddress device*

atmarp –g *device*

atmarp –t *device*

atmarp –v *device*

DESCRIPTION

The **atmarp** program displays and deletes Internet-to-ATM address translation table entries used by the ATM address resolution protocol. It also allows IP traffic to particular destinations to be routed over Permanent Virtual Circuits (PVCs). This functionality is only needed for special applications which may require the use of PVCs for IP traffic. This program does not actually control the creation of the PVCs.

If the single argument *hostname* is given, the ATM ARP entry for *hostname* is displayed. When used with the **–N** flag, the network address is displayed in numerical form. When the **–N** flag is not specified, both the symbolic and numerical forms are displayed.

OPTIONS

–a Display all of the current ATM ARP table entries. When used with **–N** flag, the network address is displayed in numerical form. When **–N** flag is not specified, both the symbolic and numerical forms are displayed.

–d Delete address mapping for specified hostname from the ATM ARP table. If an ATM connection is open to the specified host then the connection is closed.

–f Delete all dynamic address mappings from the ATM ARP table and close all Switched Virtual Channels (SVCs) to all hosts in the table.

–s Set ARP entry for outgoing Permanent Virtual Channel (PVC). All traffic to *hostname* will be encapsulated based on *encapsulation* and sent via the *device* interface on VPI *vpi*, VCI *vci*, using AAL type *aal*. *device* must be one which supports SPANS signaling (e.g. **fa0**). Specifying *peak* will limit all traffic to *hostname to peak* kilobits per second. If *peak* is not specified, no rate control is applied.

–l Attach IP to an incoming PVC. All traffic received on the interface *device* with VPI *vpi*, VCI *vci*, and AAL type *aal* will be decapsulated based upon *decapsulation* and handed over to IP. *device* must be one which supports SPANS signaling (e.g. **fa0**).

–x Detach IP from an incoming SVC or PVC. IP traffic will no longer be accepted on the specified VPI and VCI.

–c Set ARP entry for RFC 1577 (Classical IP) Permanent Virtual Channel (PVC). Also attach IP to this PVC. All traffic to *hostname* will be sent via the *device* interface on VPI *vpi*, VCI *vci*, using AAL type 5. *device* must be one which supports Q.2931 signaling (e.g. **qaa0**). Specifying *peak* will limit all traffic to *hostname to peak* kilobits per second. If *peak* is not specified, no rate control is applied. The entry will be revalidated by sending an InARP request over the PVC at 15 minute intervals if *revalidate* is non-zero. To disable this feature, use 0 for the revalidate parameter.

–r Remove ARP entry for RFC 1577 (Classical IP) Permanent Virtual Channel (PVC). Also detach IP from this PVC. IP traffic will no longer be accepted on VPI/VCI associated with this entry.

–m Set IP multicast default outgoing PVC. All traffic destined for an IP multicast address not found in the ARP table will be encapsulated based on *encapsulation* and sent via the *device* interface on VPI *vpi*, VCI *vci*, using AAL type *aal*. Specifying *peak* will limit all traffic sent on the PVC to *peak* kilobits per second. If *peak* is not specified, no rate control is applied.

–u Remove IP multicast default outgoing PVC. All traffic destined for an IP multicast address not found in the ARP table will be sent over a multicast SVC, if one can be created to the appropriate multicast group.

–n Configure the ATM address for device *device*. The ATM address is specified as 40 hexadecimal characters, with or without a leading 0x and interspersed dots (e.g. 0x0102030405060708090a0b0c0d0e0f1011121314). NOTE: The last two digits will be ignored and qaa0 will get 00, qaa1 will get 01 etc.

–z Display the ATM address for device *device*. *device* must be one which supports Q.2931 signaling (e.g. **qaa0).**

–o Add an ATM–address–to–IP–address mapping to the ARP table. The ATM address is specified as 40 hexadecimal characters, with or without a leading 0x and interspersed dots (e.g. 0x01.0203.04.050607.0809.0a0b.0c0d.0e0f10111213.14). This creates a single ARP entry for *hostname* and is used to connect to hosts which do not support ARP.

–p Set the ARP server's ATM address for the device *device*. The ATM address is specified as 40 hexadecimal characters, with or without a leading 0x and interspersed dots (e.g. 01.0203.04.050607.0809.0a0b.0c0d.0e0f10111213.14).

–g Get the ARP server address that has been configured for the device *device*.

–t Tell whether or not we are the ARP server for *device's* IP subnet.

–v Display ARP Server connection information for the device *device.* This information is useful for debugging. It includes the VPVC over which we are communicating with the ARP Server, the number of times we have unsuccessfully attempted to connect to the ARP Server, whether or not we are in the process of connecting to the ARP Server (meaning we have sent a SETUP but have not yet received a CONNECT or a RELEASE COMPLETE), and the number of Inverse ARP packets we have sent. *device* must be one which supports Q.2931 signaling (e.g. **qaa0).**

RESTRICTIONS

Currently *vpi* must be zero (0) and *vci* must be less than 1024 for all incoming PVCs. *aal* must be one of 3, 4, or 5. *encapsulation* must be one of null (no encapsulation, the default), llc_routed (IEEE LLC encapsulation for routed PDUs), or llc_bridged_8023 (IEEE LLC encapsulation for Ethernet/802.3 bridged PDUs). If *encapsulation* is specified as llc_bridged_8023 the following argument must be the 6-byte colon separated destination MAC address. *decapsulation* must be either null (no decapsulation, the default) or llc (IEEE LLC decapsulation).

On Solaris host when you use the -u option to delete the default multicast PVC the user must also delete all system arp entries which use this PVC. If not any traffic to that group will not use another entry created with the -m option subsequently. For example if you set up a default multicast PVC on 0,150 and then change it to 0,200 you will have to delete the arp entry as shown.

atmarp -m fa0 0 150 5 send traffic to the group 224.10.10.10 which uses PVC 0,150 atmarp -u atmarp -m fa0 0 200 5 traffic to 224.10.10.10 will not be sent till you do arp -d 224.10.10.10

On the FORE 200E series adapters, the peak rate will be automatically set to the closest supported rate less than the specified rate. The supported rates for SONET-OC3 are listed in the following table:

132500	45690	28191	18662	9014
120455	44167	27604	18151	8494
110417	42742	27041	17434	7982
101923	41406	26500	16987	7444
94643	40152	25980	16563	6901
88333	38971	25481	15964	6370
82813	37857	25000	15407	5837
77941	36806	24537	14888	5321
73611	35811	24091	14402	4783
69737	34868	23246	13802	4247
66250	33974	22845	13250	3722
63095	33125	22458	12740	3193
57609	32317	21721	12269	2655
55208	31548	21371	11726	2127
53000	30814	20703	11134	1594
50962	30114	20076	10600	1063
49074	29444	19776	10115	531
47321	28804	19203	9601	

Rate control is only available on FORE 200-series adapters. Attempts to use this optional parameter with 100-series adapters will result in an error.

EXAMPLE

The following example displays the address mapping for hostname *sugarmag-atm* An ATM address is comprised of the ATM switch identifier and port number. The host may be specified by name or by number, using Internet dot notation.

```
example%atmarp sugarmag-atm
fa0: sugarmag-atm (192.168.51.54): vpi.vci=0.380 aal=5
     switch.port=f215149c.19
     flags=() encapsulation=NULL peak rate=81046
```

RELEASE

__VERSION__ __DATE__

SEE ALSO

arp(8C), **cport**(8C), **cpath**(8C), **cchan**(8C)

4.4 atmconfig(8c)

NAME

atmconfig – Interface / IP / SPANS / Q.2931 / OC3 configuration tool for FORE ATM devices

SYNOPSIS

atmconfig *device*

atmconfig –m *mtu device*

atmconfig [**–s** | **–p** | **–l**] [*on* | *off*] *device*

atmconfig –u [*30* | *31* | *auto* | *off*] *device*

atmconfig –b [*on* | *off*]

atmconfig –g [*seconds*]

atmconfig –h [*seconds*]

atmconfig –f [*sonet* | *sdh*] *device*

atmconfig –i [*idle* | *unassigned*] *device*

atmconfig –t [*external* | *internal*] *device*

atmconfig –q [*peak(Kb/sec)* | *off*] *device*

DESCRIPTION

atmconfig is a tool to display the current configuration of an ATM device. The interface, IP, SPANS, Q.2931 and OC3 configurations may be viewed. It also can be used to enable and disable SPANS, IP load balancing, and IP multicast, as well as to modify the operation of an OC3 interface, where applicable.

If no action is indicated for the specified device, the configuration information for the device is displayed. The interface information includes the MTU.

FORE IP information includes the state of load balancing, automatic failover parameter settings and the state of multicast. Load balancing and automatic failover groups are displayed including group number and the units belonging to that group. Unit numbers followed by an asterisk indicate the unit is currently not operational.

SPANS information includes the state of the interface and the VPI and VCI values for SPANS signaling and connectionless messages.

Q.2931 information includes the state of the interface and the VPI and VCI values for Q.2931 signaling.

If the media type for the ATM device is OC3, the current OC3 configuration is also displayed. For OC3, the current framing used, frame and stream scrambling state, device timing source, and loopback state are displayed.

OPTIONS

–m Set the MTU on the specified interface. The largest MTU permissible is 65535 bytes.

–s Enable / Disable SPANS signaling on the specified device.

–u Set / Disable Q.2931 signaling on the specified device. It can be set to UNI 3.0, UNI 3.1 or auto-configuration mode.

–b Enable/Disable IP load balancing. When load balancing is enabled, all IP traffic traveling over SVCs and destined for an ATM network will automatically be balanced (at connection setup time, based upon the total peak bandwidth of all connections through an interface) across all FORE ATM interfaces attached to that same physical network.

–g Set IP automatic failover validation interval; the frequency at which the network interface is verified to be operational. This option is only applicable to a SPANS interface. The default is 5 seconds.

–h Set IP automatic failover retry duration; the maximum time spent retrying a failed interface before declaring the interface down (ie the "RUNNING" flag is removed). This option is only applicable to a SPANS interface. The default is 10 seconds.

–p Enable/Disable IP multicast on the specified interface.

–l Enable/Disable OC3 internal loopback mode.

–f Set OC3 framing type to either SONET or SDH.

–i Set OC3 module to insert idle cells (ITU-T standard) or unassigned cells (ATM Forum and ANSI standard).

–t Set OC3 timing source to external or internal.

–q Set/Disable IP SVC rate control on the specified device. This option is only applicable to a SPANS interface.

NOTES

Care should be taken when setting large MTUs since large packets increase the probability of packet loss due to reassembly errors from cell loss. Certain operating systems may not support the maximum ATM MTU. On these platforms, the interface MTU will be limited to the maximum allowed value. **atmconfig** cannot be used to dynamically change the interface MTU on Solaris platforms. On these machines, the -m option changes the MTU only for STREAMS traffic (including FORE Systems' API). For Solaris platforms, the interface MTU can be dynamically changed with the "mtu" option to ifconfig(1M), or can be set to "value" at boot time. For FORE IP add the line "set fore_atm:fore_mtu=value" at the end of the system configuration file (e.g. /etc/system). For changing the Classical IP MTU to "value" add the line "set fore_atm:fore_classical_mtu=value" to the system configuration file (e.g. /etc/system)

Using a shorter IP failover validation interval, failure conditions are more quickly detected but more host and network resources are consumed due to frequent revalidation.

Using a shorter IP failover retry duration, failure conditions are detected more quickly but there is a higher probability of "false" failure conditions on busy hosts. Setting a longer duration allows hosts to endure heavier traffic without indicating a failure condition but takes longer to detect real failure conditions.

The use of IP SVC rate control limits the peak bandwidth of all IP SVC traffic out the specified interface. If peak rate is modified or disabled, the connection must be torn down (see atmarp (8c)) and re-established for the new rate to take effect. See atmarp (8c) for how the peak rate is calculated.

Modifying OC3 parameters may cause communication problems. The parameters must agree with the parameters chosen at the far end or intermediate switching module.

ERRORS

No such device
This indicates that the specified device is invalid.

RELEASE

__VERSION__ __DATE__

SEE ALSO

atmarp(8c)

CHAPTER 5 Configuring a Classical IP ATM Network

5.1 Introduction

This chapter describes how to design, configure, and maintain a Classical IP ATM network. The term *classical* indicates that the ATM network has the same properties as existing legacy LANs. That is, even though ATM technology allows for large globally connected networks, for example, it is only used in the LAN environment as a direct replacement of existing LAN technology. The classical model of LANs connected through IP routers is maintained in ATM networks. RFC-1577 provides the standard for Classical IP over ATM.

Classical IP over ATM is different than IP in legacy LANs in that ATM provides a virtual connection environment through the use of PVCs and/or SVCs. SVC management is performed via UNI 3.0 or UNI 3.1 signalling. UNI 3.0 and 3.1 are broadband signalling protocols designed to establish connections dynamically. UNI 3.0 and 3.1 use Service Specific Connection Oriented Protocol (SSCOP) as a reliable transport protocol, and all signalling occurs over VPI: 0, VCI: 5. UNI 3.0 and 3.1 connections are bi-directional, with the same VPI/VCI pair used to transmit and receive.

Once a Classical IP connection has been established, IP datagrams are encapsulated using IEEE 802.2 LLC/SNAP and are segmented into ATM cells using ATM Adaptation Layer type 5 (AAL5). In addition, the default Maximum Transmission Unit (MTU) is 9,180 bytes (the SNAP header adds 8 more bytes) with a maximum packet size of 65,535 bytes. There is currently no support for IP broadcast datagrams or IP multicast datagrams in a Classical IP environment.

5.1.1 Logical IP Subnets

An important concept in Classical IP networks is that of a Logical IP Subnet (LIS). An LIS is a group of hosts configured to be members of the same IP subnet (that is, they have the same IP network and subnetwork numbers). In this sense, one LIS can be equated to one legacy LAN. It is possible to maintain several overlaid LISs on the same physical ATM network. Therefore, in a Classical IP ATM network, placing a host on a specific subnet is a logical choice rather than a physical one. In this type of environment, communication between hosts in different LISs is only permitted by communicating through an IP router which is a member of both LISs (as per RFC-1577).

The number of LISs, and the division of hosts into each LIS, is purely an administrative issue. Limitations of IP addressing, IP packet filtering, and administrative boundaries may guide a manager into establishing several LISs onto a single ATM network. Keep in mind, though, that communication between LISs must occur through IP routers.

5.1.2 Classical IP Interfaces

In order to support routing between multiple LISs, the host adapter software allows a host to be configured as a member of (and a router between) up to four distinct LISs per physical ATM interface. Each LIS membership is through a separate Classical IP virtual network interface. Existing system level IP routing configuration tools are used to control routing through each of the virtual interfaces in the same manner as routing among several physical interfaces. Note that even though each virtual interface associated with a given physical interface uses the same physical hardware, they are each configured separately with their own MTU, IP address, and ATM address.

The name of each of the Classical IP interfaces begins with **qa**. All of the Classical IP interfaces associated with physical unit zero will have **a** as the next letter. All of the Classical IP interfaces associated with physical unit one will have **b** as the next letter, and so forth. Finally, each Classical IP interface has its virtual interface number as a suffix. As an example of the above naming convention, the name of the third Classical IP interface (unit 2) on physical unit one is **qab2**.

5.1.3 SPANS Interface

While each of the **qa** interfaces for a given physical interface is designed to support Classical IP using UNI 3.0 or 3.1 signalling, there also exists a SPANS interface (usually called **fa**, but user configurable) for each physical interface. The **fa** interface supports FORE IP on top of SPANS signalling. FORE IP allows communication using AAL4 or AAL5 with no encapsulation, uses a broadcast ARP for SPANS address resolution, and supports direct communication of all hosts on a physical ATM network without the use of IP routers. Since SPANS and UNI 3.0 or 3.1 signalling use different VCIs, a host can simultaneously support FORE IP over SPANS as well as Classical IP over UNI 3.0 or 3.1 on the same physical interface.

As a result of standard IP routing, all traffic sent out an **fa** interface will use FORE IP, while all traffic sent out a **qa** interface will use Classical IP. Each of the **fa** interfaces should be assigned an IP address on a subnet different than the subnets of any of the **qa** interfaces. It is permissible to place multiple fa interfaces on the same subnet, and the driver will load balance connections across these interfaces.

It is only necessary to configure the **fa** and **qa** interfaces if the specific service provided by that interface is required. A host sending only Classical IP need not configure the **fa** interfaces. Likewise, a host sending only FORE IP would not need to configure the **qa** interfaces. Both the **fa** and **qa** interfaces may be configured simultaneously, but they must be in separate subnets. Remember that Classical IP specific configuration changes can only be done with the **qa** devices, while SPANS specific configuration changes can only be done with the **fa** devices.

5.2 Address Registration and ILMI

Before a host can establish connections over a physical interface, the host must know the ATM address for that interface. The primary purpose of Interim Local Management Interface (ILMI) is to discover and register these ATM addresses dynamically.

5.2.1 ATM Addresses

For private ATM networks, addresses uniquely identify ATM endpoints. The UNI 3.0 and 3.1 address format is modeled after that of an OSI Network Service Access Point.

Three address formats have been specified: DCC, ICD, and E.164. Per the UNI 3.0 and 3.1 specifications, all private networks should accept initial call setup messages containing ATM addresses with any of the approved formats and forward the calls as necessary.

An ATM address consists of the following:

- a 13-byte network-side prefix - The prefix is the ATM prefix of the switch to which the host is attached.
- a seven-byte user-side part - This consists of the following:
  - a six-byte End System Identifier (ESI) - The ESI is the unique IEEE MAC address of the interface.
  - a one-byte selector - Although each virtual interface for a given physical interface uses the same prefix and ESI, the selector field is the part that indicates the number of the specific virtual interface. The selector field is 00 for **`qaa0`**, 01 for **`qaa1`**, 02 for **`qaa2`**, and 03 for **`qaa3`**.

5.2.2 Operating with ILMI Support

FORE Systems switches running *ForeThought* software version 3.0 or greater provide support for ILMI. If ILMI is supported on all of the switches and hosts in a given network, when a switch boots up, ILMI enables the switch to discover all of the hosts attached to it and to send its ATM prefix associated with the port to those hosts dynamically. In return, the host prepends that prefix to its ESI and selector fields, forming a complete ATM address. The host then notifies the switch of its complete ATM address. These registration messages are sent and received over AAL5 using VPI: 0, VCI: 16. Once ILMI registration has been completed, then connection setup can occur.

If a host changes network ports after an ATM address has been registered for its interface, all existing connections will be closed. If the new port is on a different switch, a new ATM address (with a different network address prefix) will be registered. The host can then begin to establish new connections.

5.2.3 Operating without ILMI Support

If ILMI is not supported on a particular switch or host in a given network, then the ATM addresses must be manually configured. If a given switch does not support ILMI, it can not supply an ATM prefix to the hosts. Therefore, the user must assign a unique, valid prefix to the switch. Additionally, the same prefix should be used for all hosts attached to that switch.

On the host, **`atmarp -n`** is used to configure the ATM address for a specific interface. The switch directly attached to this interface is then informed of this ATM address/port combination through commands in AMI. The UNI signalling type(3.0 or 3.1) must then be set using the **`atmconfig -u`** *`<UNI_type>`* command, where *`<UNI_type>`* is either **`30`** or **`31`**. The UNI type may also be set as part of the installation session (see Chapter 3). Once the host and network have both been informed of this ATM address/port pair, the host may begin signalling.

Once an interface's ATM address has been set, it is possible to change it by first running **`atmarp -n`** to set the new address, and then bringing the interface down and back up (**`ifconfig qaXX down; ifconfig qaXX up`**) for the address change to take effect.

5.2.4 Configuration

The choice to use ILMI for address registration is made at software installation time. Since ILMI uses SNMP as its management protocol, the use of ILMI is tied into **`snmpd`**. The choice can be made to run FORE's SNMP agent and use ILMI (**`snmpd`**), run FORE's SNMP agent without using ILMI (**`snmpd -n`**), or just use ILMI (**`snmpd -i`** or **`ilmid -i`**). For SunOS, the commands to run the chosen daemon, or to configure a host's ATM address statically when not running ILMI, are placed in the script **`rc.sba200`** in the directory **`/usr/etc/fore`** or the user specified directory.

5.3 ARP and ARP Servers

5.3.1 Theory

In order for a host to establish a connection to another host, it must first determine the other host's ATM address. ATMARP (ATM address resolution protocol) is the procedure used to resolve an IP address into an ATM address. Since the ATM standards do not currently support broadcast on an ATM LAN, address resolution is performed by direct communication with a special ARP server, rather than broadcasting ARP requests as is done in legacy LANs. Each LIS must have only one ARP server configured, but a single ARP server can be the server for several LISs.

Each host in an LIS must be configured with the ATM address of the host providing ARP service for its LIS. On a host ARP server, the ATM address of the ARP server can be obtained by running **`atmarp -z`** (remember to use the interface associated with the given LIS). The ARP server address is normally configured into each host at installation time (for SunOS, the appropriate commands are placed in the script **`rc.sba200`** in the directory **`/usr/etc/fore`** or the user specified directory), but it may be done at any time by running **`atmarp -p`**. If the ARP server address is configured in the firmware download script, it will be persistent across reboots, but if it is configured using **`atmarp -p`**, it will not be persistent across reboots. Persistent configuration of an ARP server on the host is discussed more completely in Chapter 3.

Since only one ARP server can be functioning at a time in a given LIS, and since the ARP server's address is manually configured into each host, it is not possible to use multiple, redundant ARP servers to improve robustness. If an ARP server becomes nonfunctional, a new ARP server must be configured, and then each host within the LIS must be configured to use the new ARP server. To configure a new ARP server address on a host, run **`atmarp -p`** to set the new address, then bring the appropriate interface down and back up (**`ifconfig qaXX down; ifconfig qaXX up`**) for the change to take effect.

FORE's ATM switches also have the capability of being an ARP server. This process is described in the next section.

5.3.2 Configuring a FORE Switch to be an ARP Server

To configure a FORE switch as an ARP server, perform the following steps:

1. Using the AMI on the switch, determine the ATM address of the switch with the command:

configuration atmarp> getnsap

```
qaa0 NSAP address: 47000580ffe1000000f21510a00020481510a000
```

The response from this command also shows the interface name to which the ATM address is attached.

2. Set the ATM address of the ARP server for the interface name (from step 1) to be the ATM address of that interface with the AMI command:

configuration atmarp arpserver> set <NSAPaddress> <interface>

For example:

configuration atmarp arpserver> set 0x47.0005.80.ffe100.0000.f215.10a.00020481510a0.00 qaa0

NOTE

This example shows the Classical IP interface name of **qaa0** used as the ARP server interface name. Any of the Classical IP interface name(**qaa0** through **qaa3**) could be used as the ARP server name.

5.3.3 Configuring a Host to be an ARP Server

Typically, you would define a host as an ARP server during the initial system installation and configuration. This is fully explained in Chapter 3.

5.3.4 Classical IP Operation

Once a host knows its own ATM address and the ATM address of its ARP server it will attempt to establish a connection to the ARP server, which will be used to send ARP requests and receive ARP replies. When the connection to the ARP server has been established, the ARP server sends an inverse ARP (**`InARP`**) request on the new VC to learn the host's IP address. When an **`InARP`** reply is received, the ARP server places that host's IP address to ATM address mapping in its ARP cache. Therefore, over time, the ARP server dynamically learns the IP to ATM address mappings of all the hosts in its LIS. It can then respond to ARP requests directed toward it for hosts in its LIS.

NOTE

In order for a host to communicate with an ARP server, it must have learned its own ATM address and have been configured with the ATM address of the ARP server.

A host will not be able to resolve the ATM addresses of hosts in its LIS unless it can communicate with its ARP server.

Since there is no mechanism for ARP servers to exchange mapping information with each other, it is imperative that each LIS be configured with only one ARP server.

When a host wants to communicate with another host in its LIS, it first sends an ARP request to the ARP server containing the IP address to be resolved. When an ARP reply is received from the ARP server, the host creates an entry in its ARP cache for the given IP address and stores the IP to ATM address mapping. This ARP cache entry will be marked as complete. To ensure that all of the IP to ATM address mappings known by a certain host are up-to-date, hosts are required to age their ARP entries. Every 15 minutes (20 minutes on the ARP server), a host must validate its ARP entries. Any ARP entries not associated with open connections are immediately removed.

A host validates its SVCs by sending an ARP request to the ARP server. A host validates its PVCs, and an ARP server validates its SVCs, by sending an InARP request on the VC. If a reply is not received, the ARP entry is marked invalid. Once an ARP entry is marked invalid, an attempt is made to revalidate it before transmitting. Transmission will proceed only when validation succeeds. If a VC associated with an invalid ARP entry is closed, the entry is removed.

5.3.5 Operational Issues

Certain hosts in an LIS may not support Classical ARP. It is still possible to communicate with these hosts (and for these hosts to communicate themselves) by using static ARP entries. If a host does not support Classical ARP, its IP to ATM address mapping should be placed in its ARP server's cache as a static entry. This allows other hosts that do support Classical ARP to contact their ARP server as usual and obtain the correct address mapping. If a host that does not support Classical ARP wants to initiate connections, the IP to ATM address mappings of the destination hosts should be put in its ARP cache, again as static entries. By using static ARP entries in the above fashion, the ability for all hosts to communicate can be maintained.

There are some restrictions on the number of hosts that can be maintained dynamically. They are as follows:

- In the default configuration, a host can only have approximately 250 virtual connections open simultaneously. This means that an ARP server can only serve 250 clients, since each client must maintain a connection with its ARP server. This may be a limitation if the ARP server is servicing multiple LISs.
- It is possible to increase the number of connections allowed by using the AMI program (see the *ForeRunner ATM Management Interface Manual*).
- Hosts support a maximum of 1,024 connections per adapter.

5.4 Classical IP PVCs

5.4.1 Theory and Configuration

Normally, ATM connections in a Classical IP environment are established dynamically using UNI 3.0 or 3.1. ARP, ILMI, and UNI 3.0 or 3.1 all work together as described previously to set up an SVC. If a host from another vendor does not support Classical ARP or ILMI, it is still possible to setup an SVC using work-arounds. If a host or switch in an LIS does not support UNI 3.0 or 3.1, however, it is not possible to establish an SVC. In this case, a Classical IP PVC can be used for communication.

On each of the hosts, **`atmarp -c`** is used to establish the PVC. An unused VPI/VCI pair must be chosen for each host. PVCs using the chosen VPI/VCI pairs must also be setup from each of the hosts to their connecting switch, and then on all of the switches between the two connecting switches.

NOTE

Both the incoming and outgoing connections are set up simultaneously on the host, but they must be set up individually on the switches. The same VPI/VCI pair is used by a host to send on the PVC as well as receive on the PVC. The IP datagrams are sent over the PVC using AAL5 with LLC/SNAP encapsulation.

5.4.2 Revalidation and Removal

Normally, the device driver periodically checks that its PVCs are still established and functioning. A host revalidates a PVC every 15 minutes by sending InARP requests over the PVC, if the user specifies that revalidation should occur by choosing 1 as the revalidate option to **`atmarp -c`**. If non-FORE equipment supports revalidation, the same command, **`atmarp -c`** and the revalidate option of 1 must be used. If an InARP reply is not received, the revalidation fails, the PVC is marked invalid (as shown through **`atmarp -a`**), and communication over the PVC is no longer possible.

Once a PVC is marked invalid, an attempt is made to validate the PVC before transmitting. Transmission will proceed only when validation succeeds. It is possible to disable this revalidation feature by specifying 0 as the revalidate option to **`atmarp -c`**. This is often desirable when the remote end of the PVC (such as a video camera) does not support InARP.

A Classical IP PVC is removed on the host side using **`atmarp -r`**. Both the incoming and outgoing connections are removed simultaneously. The PVC must then be removed from each of the network switches involved.

5.5 Debugging

The **atmarp** utility on the host provides a number of useful options to aid communication debugging. Some of this information can also be displayed on the switch using various AMI commands. If an equivalent AMI command is available, it will be listed here.

- On the host, **atmarp -a** shows the IP address of the entry, the associated ATM address if the mapping is known, the VPI/VCI pair for an established connection, and various flags. The "Classical IP" flag indicates connections using Classical IP over UNI 3.0 or 3.1. Two other flags are especially important for connection state: "incomplete" indicates that the IP to ATM address mapping is not yet known for the given IP address; "pending" indicates that a connection has not yet been established. On the switch, AMI command **configuration atmarp show** provides the same information.
- On the host, **atmarp -z** displays the ATM address of the given interface. If the host is using ILMI for address registration, the ATM address will be displayed as nonzero when the host has successfully registered its address with the network. On the switch, AMI command **configuration atmarp getnsap interface** provides the same information.
- On the host, **atmarp -g** displays the ATM address of the current ARP server for the LIS associated with the given interface. On the switch, AMI command **configuration atmarp arpserver show interface** provides the same information.
- On the host, **atmarp -t** indicates whether this host is the ARP server for the LIS associated with the given virtual interface. On the switch, AMI command **configuration atmarp arpserver show interface** provides the same information.
- On the host, **atmarp -v** displays the status of the ARP server connection. One of the first things to check in a trouble state is that a connection to the ARP server is fully established. If the ARP server connection is established, the ARP VPI/VCI will be nonzero. The **CALLING_SERVER** flag indicates whether or not an attempt is currently being made to connect to the ARP server. The retry count indicates the number of attempts to connect to the ARP server which have been unsuccessful since the last successful attempt. The **InARP** count indicates the number of InARP requests that have been sent on the ARP server connection without a response.

5.6 Configuring the Network

In an ATM network, before any connections can be made, the two parties must know each other's ATM address in order to set up that connection.

To allow those connections to work, the ideal scenario is for all hosts and switches in the network to have support for both ILMI and for RFC-1577 (Classical IP over ATM). However, when using non-FORE equipment, this may not be the case. This section will describe how to configure a network with the following scenarios:

- Configuring a third-party host that has no ILMI or RFC-1577 support
- Configuring a third-party switch that has ILMI support
- Configuring a third-party switch that has no ILMI support, but has RFC-1577 support

5.6.1 Third-Party Host with No ILMI and No RFC-1577 Support

In establishing this configuration, the third party equipment must support UNI 3.0 or 3.1 and have LLC/SNAP encapsulation. To configure a network with a third-party vendor's host (or an edge device) that does not support ILMI or RFC-1577 (as shown in Figure 5.1), perform the following steps:

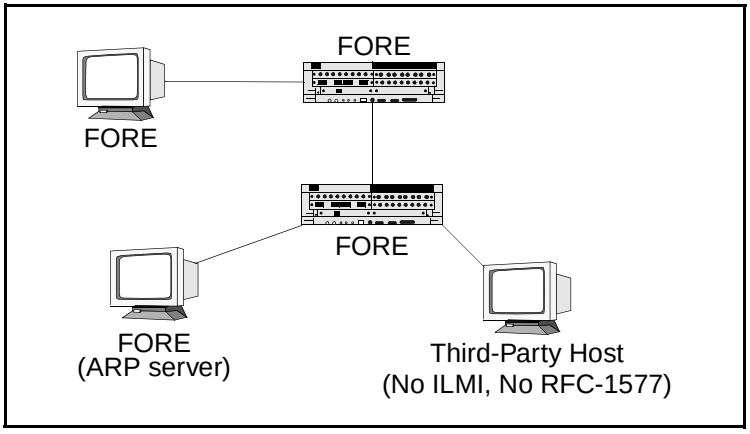

Figure 5.1 - Configuring a Third-Party Host with No ILMI and No RFC-1577 Support

1. Before you begin this process, you must have already installed software on the FORE host which is the ARP server. FORE software must also be installed and running on the other FORE equipment.
2. Using the configuration software of the third-party host, assign an ATM address with the same prefix as its switch.
3. Configure the switch so that it has a static route to the third-party host using the following AMI command:

```
configuration nsap route new <NSAP> <mask> -port <port> -vpi <vpi>
```

   Be sure to use a **mask** value of 152.

4. Configure the ARP server (on Solaris systems, edit **/etc/rc2.d/S99clip**) with a static IP to ATM mapping for the third-party host.

5.6.2 Third-Party Switch with ILMI Support

To configure a network with a third-party vendor's switch that supports ILMI, (as shown in Figure 5.2), perform the following steps:

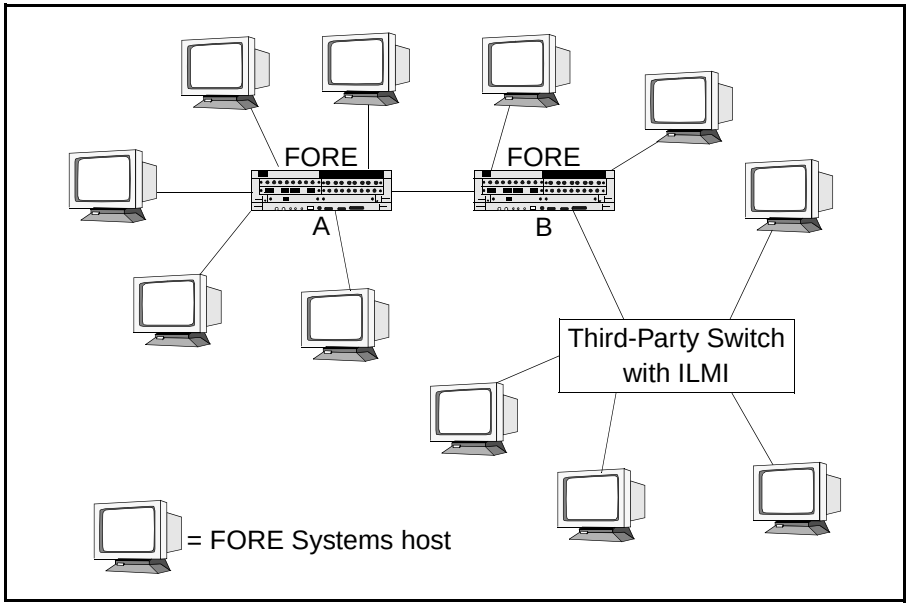

Figure 5.2 - Configuring a Third-Party Switch with ILMI Support

1. This process assumes that FORE software has been installed on all hosts and that ILMI was set in the installation process. ILMI dynamically performs address registration for all of the hosts.
2. Refer to the *ForeRunner* ATM Switch Configuration manual for procedures to configure the following:
   a. Configure a static ATM route on FORE switch "B" to the third-party switch.
   b. Configure IISP on FORE switch "B."

      Be sure to use a mask value of 104.
3. Configure two static ATM routes on the third-party switch, one to each of the FORE switches using the switch vendor's configuration software.

   Be sure to use a mask value of 104.

5.6.3 Third-Party Switch with RFC-1577 and No ILMI Support

To configure a network with a third-party vendor's switch that does not support ILMI, but does support RFC-1577 (as shown in Figure 5.3), perform the following steps:

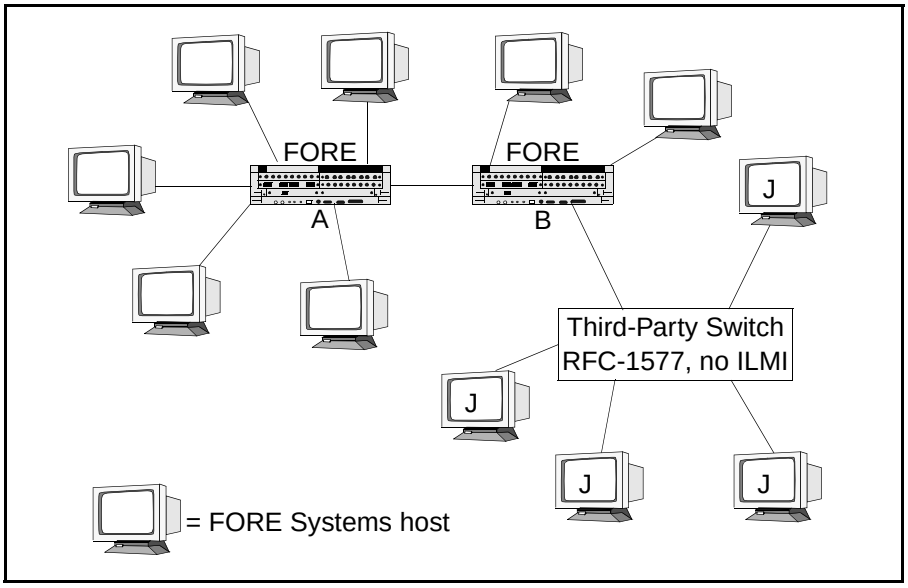

Figure 5.3 - Configuring a Third-Party Switch with RFC-1577 and No ILMI Support

1. This process assumes that FORE software has been installed on all hosts and that ILMI was set in the installation process. ILMI dynamically performs address registration for all of the FORE hosts and switches.
2. Statically configure the ✪ hosts with ATM addresses (on Solaris systems, edit **`/etc/rc2.d/S99clip`**), using the same switch prefix for all of the hosts.
3. Configure a static ATM route on FORE switch "B" to the third-party switch using the following AMI command:

```
configuration nsap route new <NSAP> <mask> -port <port> -vpi <vpi>
```

   Be sure to use a mask value of 104. Also, be sure to use the same prefix that was used to configure the hosts.

4. Configure two static ATM routes on the third-party switch, one to each of the FORE switches using the switch vendor's configuration software.

   Be sure to use a mask value of 104.

CHAPTER 6 Configuring an Emulated LAN

6.1 Introduction

This chapter describes how to design, configure, and maintain an Emulated LAN (ELAN) over an ATM network. An ELAN provides communication of user data frames among all members of the ELAN, similar to a physical LAN. One or more ELANs may run simultaneously (and independently) on the same ATM network. Just as with physical LANs, communication between ELANs is possible only through routers or bridges.

The current software release supports emulation of Ethernet (IEEE 802.3) and Token-Ring LANs. Each ELAN is composed of a set of LAN Emulation Clients (LECs), a LAN Emulation Configuration Server (LECS), a LAN Emulation Server (LES), and a Broadcast and Unknown Server (BUS). Each LEC resides in an ATM host system (PC, Macintosh, Unix workstation, or switch). In the current software release, the LECS, LES, and BUS may reside either in a *ForeRunner* switch, or in a Unix workstation running SunOS version 4.1.x, or Solaris versions 2.4 and 2.5. Additional software features include intelligent BUSs, and a LEC "failover" mechanism that can provide redundancy to an ELAN.

6.2 Emulated LAN Components

The components of an emulated LAN include LAN Emulation Clients (LECs), and LAN Emulation Services consisting of: a LAN Emulation Configuration Server (LECS), a LAN Emulation Server (LES), and a Broadcast and Unknown Server (BUS). Each of these services may reside in the same physical system or in separate physical systems. For example, the LECS could reside in a switch, while the LES and BUS reside in a workstation. In the current *ForeThought 4.1.0* software, the LECS, LES, and BUS are supported for systems runing SunOS or Solaris; and for ASX-200 series and ASX-1000 switches. The functional interconnections of a simple ELAN consisting of two LECs, an LECS, LES, and BUS are shown in Figure 6.1.

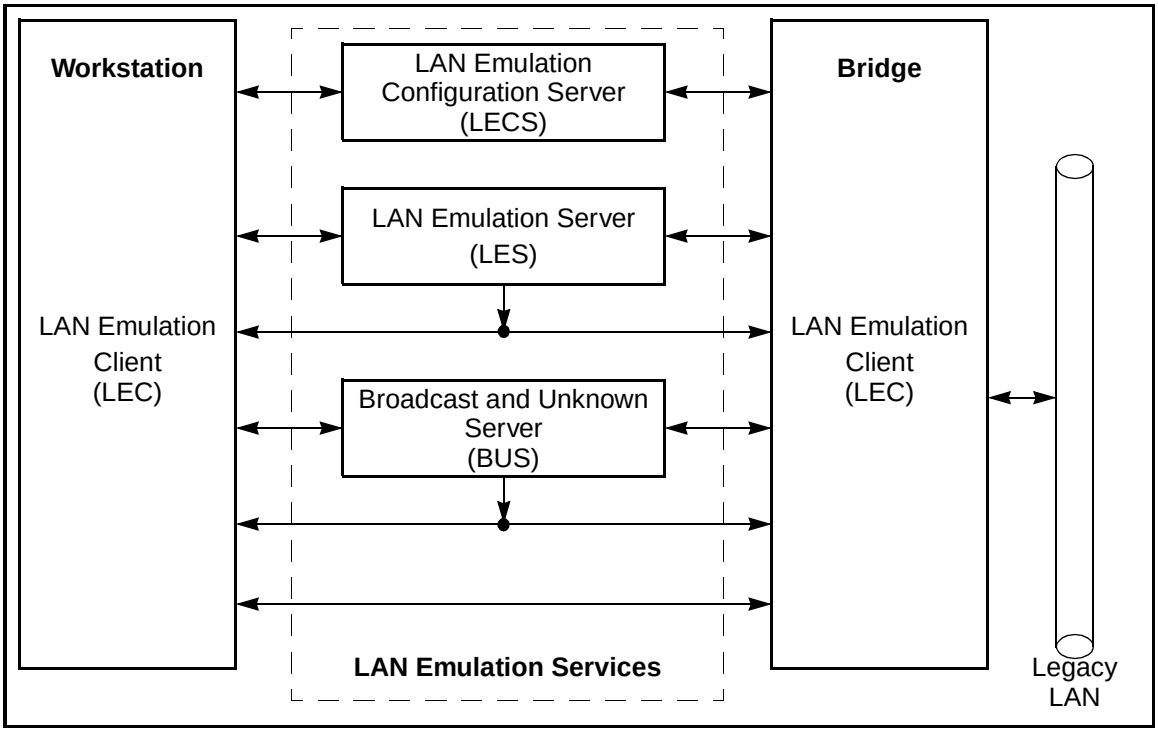

Figure 6.1 - Basic Emulated LAN Interconnections

6.2.1 LAN Emulation Client (LEC)

The LEC is the component in an end system that performs data forwarding, address resolution, and other control functions when communicating with other components within the ELAN. It also provides a MAC level emulated Ethernet or Token-Ring interface and appears to higher level software as though a physical interface is present. Each LEC must register with both the LES and BUS associated with the ELAN it wishes to join before it may participate in the ELAN. *ForeThought 4.1.0* supports a maximum of 16 LECs per adapter card.

6.2.2 LAN Emulation Configuration Server (LECS)

The LECS is responsible for the initial configuration of LECs. It provides information about available ELANs that a LEC may join, together with the address of the LES associated with each ELAN. With *ForeThought 4.1.0*, the user may also use the LECS to associate multiple LESs with a given ELAN. This feature allows LECs to "failover" to a hierarchy of redundant services if the primary LES for an ELAN goes down.

6.2.3 LAN Emulation Server (LES)

The LES implements the control coordination function for the ELAN. The LES provides the service of registering and resolving MAC addresses to ATM addresses. A LEC registers its own address with the LES. A LEC also queries the LES when the client wishes to resolve a MAC address to an ATM address. The LES either responds directly to the client or forwards the query to other clients so they may respond. There is only one instance of an active LES per ELAN.

6.2.4 Broadcast and Unknown Server (BUS)

Unlike traditional shared-media LAN architectures such as Ethernet and Token-Ring, ATM is connection based. Therefore, it has no built-in mechanism for handling connectionless traffic such as broadcasts, multicasts, and unknown unicasts. In an emulated LAN, the BUS is responsible for servicing these traffic types by accepting broadcast, multicast, and unknown unicast packets from the LECs to the broadcast MAC address (FF-FF-FF-FF-FF-FF) via dedicated point-to-point connections, and forwarding the packets to all of the members of the ELAN using a single point-to-multipoint connection. Each LEC is associated with only one active BUS. *ForeThought 4.1.0* also supports the use of "intelligent" BUSs that allow the BUS to use the LES's registration table to direct unicast traffic.

6.3 Emulated LAN Operation

This section describes the operation of an ELAN and its components from the point of view of a LEC. The operation of an ELAN may be divided into three phases:

1. Initialization
2. Registration and Address Resolution
3. Data Transfer

ELAN components communicate with each other using ATM connections. LECs maintain separate connections for traffic control functions and data transfer. The following connection types are used by the LEC when operating in an ELAN:

- *Configuration-Direct Connection*: a bidirectional point-to-point VCC set up by the LEC to the LECS.
- *Control-Direct Connection:* a bidirectional point-to-point VCC set up by the LEC to the LES. This connection must be maintained for the duration of the LEC's participation in the ELAN.
- *Control-Distribute Connection*: a unidirectional point-to-multipoint VCC set up by the LES to the LEC. This connection must be maintained for the duration of the LEC's participation in the ELAN.
- *Multicast-Send Connection*: a bidirectional point-to-point VCC set up by the LEC to the BUS for sending multicast data to the BUS. The LEC must attempt to maintain this connection while participating in the ELAN.
- *Multicast-Forward Connection*: a unidirectional point-to-multipoint VCC set up from the BUS to LECs participating in the ELAN. This VCC must be established before a LEC participates in an ELAN. The LEC must attempt to maintain this connection while participating in the ELAN.
- *Data-Direct Connection*: a bidirectional point-to-point VCC set up between LECs that want to exchange unicast data traffic.

For the following discussion, please refer to Figure 6.2.

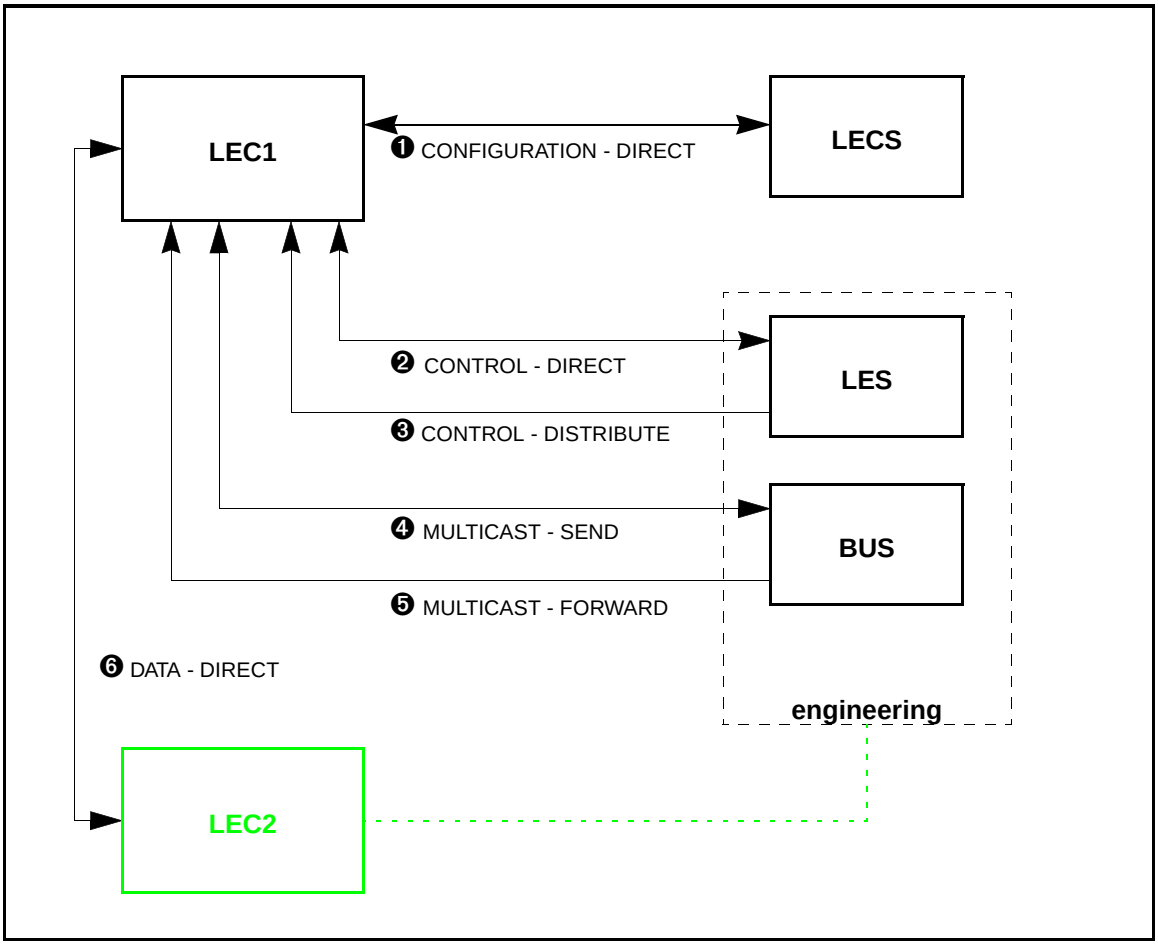

Figure 6.2 - ELAN Operation

6.3.1 Initialization

Upon initialization, LEC1 obtains its own ATM address via address registration. LEC1 obtains the address of the LECS in one of three ways: via manual configuration, via the "well-known" address, or via PVC (0,17).

Once it knows the location of the LECS, LEC1 establishes a configuration-direct connection ❶ to the LECS. When connected, the LECS provides LEC1 with the information necessary to connect to the ELAN it wishes to join. This information includes such parameters as: the ATM address of the ELAN's LES, the type of LAN being emulated, maximum packet size, and the name of the ELAN (**`engineering`**, for example). This configuration information is contained in a configuration file that must be built and maintained by the network administrator.

NOTE

Detailed information about the LECS configuration file may be found in Section 6.4.2.1 and in the lecs.cfg man page (see Chapter 8).

6.3.2 Registration and Address Resolution

After obtaining the address of the LES, LEC1 establishes a control-direct connection ❷ to the LES. The LES then assigns LEC1 a unique identifier, and LEC1 then registers its own MAC and ATM addresses with the LES. (The LES maintains a table containing the MAC addresses and corresponding ATM addresses of all members of the ELAN.) At this point, LEC1 has "joined" the ELAN.

The LES then establishes a control-distribute connection ❸ back to LEC1. Connections ❷ and ❸ can now be used by LEC1 to send LAN Emulation ARP (LE_ARP) requests to the LES, and receive replies.

LEC1 now sends an LE_ARP request to the LES to get the ATM address of the BUS corresponding to the broadcast MAC address (FFFFFFFFFFFF). The LEC then establishes a multicast-send connection ❹ to the BUS. The BUS responds by setting up a multicast-forward connection ❺ to the LEC.

At this point, the LEC is ready to transfer data.

6.3.3 Data Transfer

When LEC1 receives a network-layer packet from a higher layer protocol to transmit to some destination MAC address (for example, LEC2), LEC1 initially does not know the corresponding ATM address of the destination. Consequently, LEC1 transmits an **LE_ARP** request to the LES.

NOTE

The example shown in Figure 6.2 assumes that LEC2 has already registered with the LES, and that connections similar to those described for LEC1 already exist.

While waiting for the LES to respond, LEC1 forwards the packet to the BUS. The BUS broadcasts the packet to all LECs on the ELAN. This is done to avoid data loss, and to circumvent connection setup latency (due to the **LE_ARP** process) that may not be acceptable to some network protocols.

If the **LE_ARP** response is received, LEC1 establishes a data-direct connection ❻ to the destination address of LEC2. It is this path that will be used for subsequent data transfers. Before LEC1 begins to use this connection, it first sends a “flush” packet via the BUS to the destination, LEC2. When LEC2 acknowledges receipt of this packet, signifying that the BUS path is empty, only then does LEC1 begin to use the data-direct connection ❻ for data transfer. This process ensures that the network protocol’s frames arrive in the proper order.

If no response is received to the **LE_ARP**, LEC1 continues to send data via the BUS, while continuing to **LE_ARP** until a response is received and a data-direct connection to LEC2 established.

If LEC1 already has a data-direct connection to a MAC address it wishes to reach, it need not go through the **LE_ARP** process again. Instead, it continues to use the current connection. This is possible because each LEC maintains a cache of MAC address to ATM address mappings that it receives in response to the **LE_ARP**s it has sent. Entries in this cache are “aged” out over a period of time. Data-direct connections are also cleared if they remain inactive for a period of time.

6.4 Configuring an ELAN

Two methods for configuring an ELAN are presented in the following sections:

1. using the **`configure_lanem`** script
2. at the command line, using the appropriate LAN emulation commands (**`elconfig`**, **`le`**, **`lecs`**, **`lane`**, **`elarp`**, **`leq`**, **`lestat`**)

6.4.1 Using the `configure_lanem` Script

Before You Begin

NOTE

Before running the script, you should read through this entire section. Detailed explanations of each of the prompts appearing in the script session may be found in Section 6.4.1.1.

You should know the topology of the ELAN or ELANs that you want to administer. You will be asked to supply the following information when running the **`configure_lanem`** script:

- The pathname of the LECS configuration file (if you choose to run an LECS on your host system).
- The unique selector octet for the LECS service (if you choose to run an LECS on your host system).
- If you choose to run LESs and/or BUSs on your host system, you must determine the unique selector octet for each service.
- Whether or not LECs are to use an LECS, and if so, whether they are to contact the LECS via the "well-known" address or an ATM address that you supply.

NOTE

Refer to Section 6.4.2.1 for details on the information that should be included in the LECS configuration file.

- The name of each ELAN for which you will configure an LEC.
- If you choose not to use an LECS, the ATM address of the LES associated with each ELAN for which you will configure an LEC.

Execute the **`configure_lanem`** script as follows:

1. Login as **`root`**.
2. Type the following command to run the **`configure_lanem`** script:

```
/usr/fore/etc/configure_lanem
```

NOTE The path to the configure_lanem command may vary from that given above, depending on where you installed the FORE ATM files.

Responses to the following typical session's questions are system-specific and must be determined by the system administrator prior to configuring an ELAN. If you wish to use an LECS, the system-specific information must also be entered in the LECS configuration file. This may be done either with the *ForeThought* VLAN Manager, or with an editor as described in Section 6.4.2.1.

```
=====================================================================
                 FORE Systems LAN Emulation Configuration
=====================================================================
***** No Configuration Information *****
Would you like to run an LECS on this host? [n] y<ENTER>
Enter the LECS configuration file pathname [/sbin/fore/lecs.cfg]: <ENTER>
Enter the LECS Selector octet : 0x10<ENTER>
Enter the LECS Adapter number [0]: <ENTER>
Would you like to suppress the LECS well-known address? [n] <ENTER>

Would you like to run LES's and/or BUS's on this host? [n] y<ENTER>
(0): LES, BUS, or LES/BUS pair <les/bus/pair> (return to end): pair<ENTER>
(0): Enter the LES Selector octet : 0x20<ENTER>
(0): Enter the BUS Selector octet : 0x30<ENTER>
(0): Enter LES/BUS Server Name: engineering<ENTER>
(0): Enter LAN type <[ethernet]/token-ring>: <ENTER>
(0): Enter max frame size <[1516]/4544/9234/18190>: 18190<ENTER>
(0): Enter adapter number [0]: <ENTER>
(1): LES, BUS, or LES/BUS pair <les/bus/pair> (return to end): <ENTER>

Would you like to use an LECS to retrieve configuration information? [y] <ENTER>
Use the “Well-Known” LECS address? [y] <ENTER>

An Automatic ELAN is a special case, where you do not specify
the ELAN to join. The ELAN is decided by the Administrator by
configuring the LECS database.
Would you like to configure a Automatic ELAN? [y] <ENTER>
Enter Adapter number [0]: <ENTER>
Enter Interface name [el0]: <ENTER>

Enter ELAN name to configure (return to end):
```

NOTE

LECs configured with the **`configure_lanem`** script require a functioning network interface (for example, **`el0`**). Refer to Section 4.1 of this User’s Manual for information about configuring the appropriate network interface(s).

6.4.1.1 `configure_lanem` Script Questions and Responses

When running the **`configure_lanem`** script, you are prompted for answers to questions that customize your ELAN configuration. During your session, you may not see all of the questions. The prompts that you do see depend on your environment and on answers to previous questions. In this section, the questions are shown first in `courier` font, and the explanations of the effects of the possible replies are shown after the questions.

```
=====================================================================
                FORE Systems LAN Emulation Configuration
=====================================================================
***** No Configuration Information *****
```

If LAN Emulation has not been configured, the **`No Configuration Information`** message appears. If ELANs have been configured, current configuration information appears.

```
Do You Want To Modify Configuration Information? [n]
```

If you wish to configure or modify LAN Emulation, respond with **`y`**. Answering **`n`** ends the LAN Emulation Configuration process.

```
Would you like to run an LECS on this host? [n]
```

If you wish to run a LAN Emulation Configuration Server (LECS) on the host system, respond with a **`y`**. System-specific information must also be entered in the LECS configuration file. This may be done either with the *VLAN Manager*, or with an editor as described in Chapter 6.

NOTE

Detailed information on the implementation and configuration of the LECS is available in the online **`lecs`** man page. The **`lecs`** man page text is also available for reference in Chapter 8 of this manual.

If you respond with an **`n`**, the next three prompts will not appear.

NOTE

The following prompts include requests for input of various selector octet values. These values may be entered in decimal format(default) or in hexadecimal format. If hexadecimal format is used, the value must be preceded by **`0x`**. Valid numbers are **`0`** through **`255`** decimal or **`0x0`** through **`0xff`** hexadecimal.

```
Enter the LECS configuration file pathname [/sbin/fore/lecs.cfg]:
```

Enter the path and name of the configuration file that the LECS is to use. The path and name given in the example point to the default LECS configuration file installed with the supplied software.

```
Enter the LECS Selector octet :
```

Enter the value for the selector byte of the ATM address of the LECS.

```
Enter the LECS Adapter number [0]:
```

Enter the unit number of the ATM adapter that is the host of the LECS.

```
Would you like to suppress the LECS well-known address? [n]
```

Answer **y** if you wish to suppress the default LECS well-known address.

```
Would you like to run LES's and/or BUS's on this host? [n]
```

If you wish to run a LAN Emulation Server (LES) and/or a Broadcast and Unknown Server (BUS) on this host, answer **y**.

NOTE

Detailed information about the establishment and use of the LAN Emulation Server (LES) and Broadcast and Unknown Server (BUS) is available in the on-line **le** man page. The **le** man page text is also available for reference in Chapter 8 of this manual.

NOTE

The zeroes in parentheses at the beginning of the following prompts signify that this is the first instance of a LES, BUS, or LES/BUS pair being configured. This value increments each time that these prompts appear, signifying the establishment of an additional LES, BUS, or LES/BUS pair.

```
(0): LES, BUS, or LES/BUS pair <les/bus/pair> (return to end):
```

This prompt allows you to configure a LES, BUS, or LES/BUS pair on this host. Valid entries are **les**, **bus**, and **pair**. Pressing the **<return>** key without an entry will bypass this part of the configuration.

```
(0): Enter the LES Selector octet :
```

This prompt will appear if the user answered the **LES**, **BUS**, or **LES/BUS pair** prompt with either **les** or **pair**. Enter the value for the selector byte (octet) of the ATM address of the LES.

```
(0): Enter the BUS Selector octet :
```

This prompt will appear if the user answered the **LES, BUS, or LES/BUS pair** prompt with either **bus** or **pair**. Enter the value for the selector byte (octet) of the ATM address of the BUS.

```
(0): Enter LES/BUS Server Name:
```

Enter the name (**engineering**, for example) you wish to assign to the LES/BUS Server that you are configuring.

```
(0): Enter LAN type <[ethernet]/token-ring>:
```

Enter the LAN type that you wish to emulate. The default is **ethernet**.

```
(0): Enter max frame size <[1516]/4544/9234/18190>:
```

Enter the maximum frame size that will be permitted on the LAN type that you are emulating. The default is **1516**.

```
(0): Enter adapter number [0]:
```

Enter the unit number of the host adapter for the ELAN services that you are configuring.

NOTE

Detailed information about the establishment of an ELAN is available in the on-line **elconfig** man page. The **elconfig** man page text is also available for reference in Chapter 8 of this manual. Note that a host may join more that one ELAN. A LEC must be configured for each ELAN that you wish to join.

```
Would you like to use an LECS to retrieve configuration information? [y]
```

Answer **y** to this question if you wish the local LEC to use an LECS to retrieve configuration information. Answer **n** if you wish the local LEC to use an LES that you specify. The following question does not appear if you answer **n**.

```
Use the “Well-Known” LECS address? [y]
```

Answering **y** to this question instructs the local LEC to use the default (**"well known"**) ATM address for communicating with the LECS. If you answer **n**, you will be prompted to enter the ATM address of the LECS that the LEC is to use.

```
An Automatic ELAN is a special case, where you do not specify
the ELAN to join. The ELAN is decided by the Administrator by
configuring the LECS database.
Would you like to configure a Automatic ELAN? [y]:
```

Answer **y** if you wish to configure an Automatic ELAN. If you answer **n**, the following two prompts will not appear.

```
Enter Adapter number [0]:
Enter Interface name [el0]:
Enter ELAN name to configure (return to end):
```

The name of the emulated LAN that you wish to configure (for example, **marketing**) is entered in response to this prompt.

```
Enter LES address Manually? [n]
```

Answer **y** if you wish to enter the ATM address that the ELAN named in the previous prompt is to use when communicating with the LES. Answer **n** if you wish ELAN members to use the LECS to discover the ATM address of the ELAN's LES.

```
Enter ELAN name to configure (return to end):
```

If you wish to configure another ELAN, enter the ELAN name here. If you are finished configuring ELANs, press the **<return>** key to end ELAN configuration.

The script then presents the current LAN emulation configuration similar to the following:

```
Service:                 LECS
  Configuration file:  /etc/fore/lecs.cfg
  Selector octet:      0x10
  Adapter Number:      0
Service:                 LES/BUS pair
  LES Selector octet:  0x20
  BUS Selector octet:  0x30
  Server Name:         "engineering"
  LAN type:            ethernet
  Max frame size:      18190
  Adapter Number:      0

LECS ATM Address       "Well-Known"

ELAN:                    Automatic ELAN
  Adapter Number:        0
  Interface Name:        el0
```

The script presents the current LAN emulation client configuration similar to the following:

```
LECS ATM Address       "Well-Known"

ELAN:                     Automatic ELAN
  Adapter Number:         0
  Interface Name:         el0
=====================================================================

Do You Want To Modify Configuration Information? [n]
```

Answer **y** if you wish to change, delete, or add LAN emulation configuration information.

```
Save Configuration Information? [y]
```

Answer **y** if you wish to save the configuration information that you have entered. The system responds with a line indicating the configuration information is being saved in a file called **fore_lanem.conf**.

6.4.2 Manual ELAN Configuration and Administration

Manual configuration and administration of ELANs is accomplished using the following commands provided with *ForeThought 4.1.0*: **`elconfig, le, lecs, lane, elarp, leq, and lestat`**.

NOTE

Detailed information about each of these commands may be found in Chapter 8, or in the on-line **`man`** pages corresponding to each command.

There are three major steps that the system administrator should follow in order to configure and control ELANs:

1. Configure an LECS Configuration File (Section 6.4.2.1).
2. Administer LAN Emulation Services (LECS, LES, and BUS) using the **`lane`**, **`lecs`**, and **`le`** commands (Section 6.4.2.4).
3. Administer LECs using the **`elconfig`** command (Section 6.4.2.5).

Once you have an ELAN configured and running, you can obtain information about it by using the **`elarp`**, **`leq`**, and **`lestat`** commands.

The remainder of this section gives a practical example of configuring and administering an ELAN manually using *ForeThought 4.1.0.*

6.4.2.1 Configuring an LECS Configuration File

The LECS uses a text configuration file to contain the configuration information needed by LECs that wish to participate in an ELAN. The LECS configuration file may be built and edited using a text editor such as **`vi`** or **`emacs`**.

NOTE

ForeThought VLAN Manager, a product available separately from FORE Systems, greatly simplifies the administration of ELANs. Its graphical user interface controls the content of the LECS configuration file transparently to the user.

Before You Begin

Before building or modifying the LECS configuration file, you should first determine the topology of the ELAN or ELANs that you want to administer. You must supply the following information when building or editing the LECS configuration file:

- Provide the name of each ELAN (**`engineering`**, **`marketing`**, etc.).
- Provide the LAN type (ethernet or token-ring) for each ELAN
- Provide the MTU size for each ELAN
- Provide the ATM address of the LES for each ELAN.
- If LEC failover is to be made available to clients on a given ELAN, the ATM addresses for all LESs in that ELAN's failover sequence must be included.
- Provide the address of each LEC that may participate in each ELAN.
- Provide various other configurable parameters defined in the on-line **`man`** page for the **`lecs`** command.

CAUTION

Do not attempt to edit an existing functional LECS configuration file without first making a backup copy of the file. Incorrect modification of the configuration file could result in loss of communication between one or more members of a defined ELAN.

NOTE

You may make changes to the LECS configuration file while the LECS process is running. The configuration file is reread periodically by the LECS process (the default period is ten minutes). Consequently, any changes that you make to the configuration file are not recognized until the file is reread.

LECS Configuration File Syntax

Each line that you enter in the configuration file takes the general form:

```
[[group].]key : value
```

The **group** field may represent:

- ELANs (by name) - ELAN names are case-sensitive, and may not exceed 32 characters in length
- clients ATM addresses, MAC addresses, or route descriptors
- miscellaneous LECS control information specified by using a **group** name of **LECS**

The **key** field is used to denote an individual parameter within a **group**.

The **value** field contains the value assigned to the **key**.

Omitting the **group** implies that the **key** and **value** apply to all groups in the configuration file. Leading and trailing spaces, as well as spaces on either side of the ":", are ignored.

For example, to specify a maximum frame size of 1516 bytes for the ELAN named **engineering**, enter:

```
engineering.Maximum_Frame_Size : 1516
```

Similarly, to specify a default maximum frame size of 1516 bytes for all ELANs defined in a given configuration file, enter:

```
.Maximum_Frame_Size : 1516
```

Table 6.1 defines the various key parameters that may be entered in the configuration file. The default value for each parameter is also given.

Table 6.1 - LECS Configuration File Parameters

Parameter	Definition
`.LAN_Type: ethernet/IEEE 802.3`	Identifies the type of emulated LAN, either **`Ethernet/IEEE 802.3`** or **`IEEE 802.5`**.
`.Maximum_Frame_Size: 1516`	The length (in number of bytes) of the largest frame field. Selections are: **`1516`**, **`4544`**, **`9234`**, and **`18190`**.
`.Control_TimeOut: 120`	Specifies the timing out of request/response control frame interactions in seconds. Default value is **`120`** seconds.
`.Maximum_Unknown_Frame_Count: 1`	Limits the number of unicast frames sent to the BUS. Default is **`1`** frame.
`.Maximum_Unknown_Frame_Time: 1`	Limits the number of unicast frames sent to the BUS in the specified number of seconds. Default is **`1`** second.
`.VCC_TimeOut_Period: 1200`	Specifies the length of time that an idle data connection remains open before being closed. Default value is **`1200`** seconds.
`.Maximum_Retry_Count: 1`	Limits the number of **`LE_ARP`** requests. Default is **`1`**.
`.Aging_Time: 300`	Specifies the period that **`LE_ARP`** cache table entries remain valid, in seconds. Default value is **`300`** seconds.
`.Forward_Delay_Time: 15`	Specifies the timing out of non-local ARP cache entries in seconds. Default value is **`15`** seconds.
`.Expected_LE_ARP_Response_Time: 1`	Specifies the maximum time a LEC expects an **`LE_ARP`** request/response will take, in seconds. Default value is **`1`** second.
`.Flush_TimeOut: 4`	Specifies the maximum time a LEC expects an **`LE_FLUSH`** request/response will take, in seconds. Default value is **`4`** seconds.

Table 6.1 - LECS Configuration File Parameters (Continued)

Parameter	Definition
`.Path_Switching_Delay: 6`	Minimum time between switching BUS and data paths, in seconds. Default value is **6** seconds.
`.Multicast_Send_VCC_Type: Best Effort`	Specifies the multicast send mode, either **Best Effort**, **Variable**, or **Constant**.
`.Connection_Complete_Timer: 4`	Specifies the time period in which data or READY_IND is expected, in seconds. The default is **4** seconds.

Lines beginning with # may be inserted if you wish to include comments or to improve the clarity of the presentation when the file is viewed or printed. These lines are ignored when the file is read. Lines may be continued by escaping the end-of-line with a backslash "\" (do not enter the quote marks).

Defining an ELAN

Each ELAN is defined by an address statement whose value denotes the ATM address of the ELAN's LES. For example:

```
engineering.Address:47.0005.80.ffe100.0000.f21a.01b9.0020480605b2.11
```

If you wish to define multiple instances of an ELAN for use by the LEC failover mechanism, the address statements would appear as follows:

```
marketing|0.Address: 47.0005.80.ffe100.0000.f21a.01b9.0020480605b3.21
marketing|1.Address: 47.0005.80.ffe100.0000.f21a.01b9.0020480605b2.23
marketing|2.Address: 47.0005.80.ffe100.0000.f21a.00fe.002048062161.01
```

In this example, redundant LES addresses for the **marketing** ELAN have been defined. Note that the group name, **marketing**, ends with the meta-character **|**, followed by a number indicating the position of the LES in the failover sequence. If the **marketing|0** LES were to fail, LECs could "failover" to the **marketing|1** LES. The LEC then periodically tries to reconnect with **marketing|0**. If **marketing|1** also failed, the LEC would then failover to **marketing|2**, (and periodically attempt to reconnect to **marketing|0** and **marketing|1**).

In addition, you may instruct a given ELAN to override any of the key values set for all groups. For example, the **engineering** ELAN could override a **Maximum_Frame_Size** setting of **1516** thus:

```
engineering.Maximum_Frame_Size: 4544
```

If you want to control which clients may or may not join a given ELAN, two additional keys, **Accept** and **Reject**, whose values are comma-separated lists of matching elements, may be used. These values may be:

a MAC address,

```
engineering.Accept:0020480605b2 , 002048080011 , 0020481020ef
```

an ATM address and equal-length bit mask,

```
engineering.Accept:47.0005.80.FFE100.0000.0000.0000.002048000000.00 \
                   FF.FFFF.FF.FFFFFF.0000.0000.0000.FFFFFF000000.00
```

or an ATM address containing “don’t-care” semi-octets denoted by an “X”.

```
marketing.Accept: 47.0005.80.FFE100.XXXX.XXXX.XXXX.002048XXXXXX.XX
```

The last two forms of ATM-address matching elements are functionally the same. The latter is shorter but only allows for masks whose semi-octets are all ones or all zeros, while the former allows for arbitrary masks. A prospective-client address is “captured” by an ELAN name if the client’s address matches one of the **Accept** elements but not one of the **Reject** elements (if present). Finally, an ELAN may be configured to accept any client that wishes to join by including the following statement:

```
default.Accept:XX.XXXX.XX.XXXXXX.XXXX.XXXX.XXXX.XXXXXXXXXXXX.XX
```

The order in which to apply the Accept and Reject rules is given by a **Match.Ordering** group.key statement, whose value is a comma-separated list of ELAN names. For example:

```
Match.Ordering: default, engineering, marketing|0, marketing|1,\
                                      marketing|2
```

The names of all ELANs that have **Accept** keys must be included in **Match.Ordering**. Names of all of the members of a LEC failover sequence must be included so that LECs may use them.

Defining a Client

Clients need not be defined in the LECS configuration file. Typically, you would define a client for the purpose of overriding one or more of the default configuration parameters for that particular client.

A client is defined by using its ATM address, MAC address, or route descriptor in the **group** field, and perhaps giving the name of its ELAN as the value of the **LAN_Name** key. For example:

```
47.0005.80.FFE100.0000.0000.0000.002048222222.22.LAN_Name: engineering
002048ABCDEF.LAN_Name: marketing
012F.LAN_Name: publications
```

Configuration parameter overrides can also be given on a per-client basis. For example, the following statements override the default **VCC_TimeOut_Period** and **Aging_Time** configuration parameters for a client whose MAC address is **002048080011** on the **engineering** ELAN:

```
002048080011.LAN_Name:engineering
002048080011.VCC_TimeOut_Period:1200
002048080011.Aging_Time: 30
```

LECS Control Parameters

Specifying values for keys in the **LECS** group provides control over the operation of the LECS process.

NOTE If you change the values of the LECS control parameters while the LECS process is running, the new values do not take effect until the LECS process is stopped, and then restarted.

When a client contacts the LECS, the connections established are known as Configuration Direct VCCs. To override the default value of the **VCC_TimeOut_Period** key (the number of seconds before an idle Configuration Direct VCC is automatically closed by the LECS), enter a statement similar to the following:

```
LECS.VCC_TimeOut_Period: 1200
```

The LECS periodically checks whether its configuration file has been modified, and, if it has, the file is reread. The length of this period in seconds is given by the **Reload_Period** key:

```
LECS.Reload_Period: 600
```

The **Permanent_Circuits** key holds a comma-separated list of **VPI.VCI** pairs denoting the local ends of 0.17 PVCs on which the LECS should listen. For example:

```
LECS.Permanent_Circuits: 0.42, 0.112
```

The LECS can provide the client with a fourteen-bit pattern to permute the MAC-address generation algorithm. This bit pattern is specified with the **MAC_Address_Base** key.

```
LECS.MAC_Address_Base: 38fe
```

6.4.2.2 Sample LECS Configuration File

CAUTION

Do not attempt to edit an existing functional LECS configuration file without first making a backup copy of the file. Incorrect modification of the configuration file could result in loss of communication between one or more members of a defined ELAN.

NOTE

For a detailed discussion of how to configure an LECS configuration file similar to the one given in this section, please refer to Section 6.4.2.1.

The sample LECS configuration file at the end of this section defines three ELANs:

- **`default`**
- **`engineering`**
- **`marketing`**

The **`Match.Ordering`** statement specifies the ELAN names in the order that prospective clients will attempt to join. Note that redundant **`marketing`** ELANs have been included. This allows clients attempting to join the **`marketing`** ELAN to "failover" to one of the redundant LES instances if the primary LES fails.

The default configuration parameters are shown with their default values. These values apply to all ELANs in this configuration file, unless overridden for a particular ELAN or client.

ELAN **`default`** is configured to accept any client that wishes to join. The administrator must substitute the ATM address of the **`default`** LES in place of the "4"s in the **`default.Address`** statement.

ELAN **`engineering`** has overridden the default **`Maximum_Frame_Size`** with a new size of 4544 bytes. Consequently, this frame size applies only to traffic on the **`engineering`** ELAN. The **`default`** and **`marketing`** ELANs continue to use a frame size of 1516 bytes.

ELAN **`marketing`** has three instances, **`|0`**, **`|1`**, and **`|2`**. These three instances provide LECs that join the ELAN marketing the information necessary to implement the LEC "failover" mechanism. **`marketing|0`** defines the primary services for the ELAN. If **`marketing|0`** fails, LECs connected to it can automatically switch to **`marketing|1`** and continue operating (while periodically attempting to rejoin **`marketing|0`**). If **`marketing|1`** were also to fail, the LECs could then switch to services on **`marketing|2`**.

Two LECs, whose MAC addresses are **`002048080011`** and **`0020481020ef`**, are identified as acceptable clients for the **`engineering`** and **`marketing`** ELANs.

```
#
# The search ordering of elan names
#
Match.Ordering: default, engineering, marketing|0, marketing|1, marketing|2
#
# the default configuration parameters
#
.Control_TimeOut: 120
.Maximum_Unknown_Frame_Count: 1
.Maximum_Unknown_Frame_Time: 1
.VCC_TimeOut_Period: 1200
.Maximum_Retry_Count: 1
.Aging_Time: 300
.Forward_Delay_Time: 15
.Expected_LE_ARP_Response_Time: 1
.Flush_TimeOut: 4
.Path_Switching_Delay: 6
.Multicast_Send_VCC_Type: Best Effort
.Connection_Complete_Timer: 4
.LAN_Type: Ethernet/IEEE 802.3
.Maximum_Frame_Size: 1516
#
# Parameters for the active default elan
#
default.Address:44.4444.44.444444.4444.4444.4444.444444444444.44
default.Accept: XX.XXXX.XX.XXXXXX.XXXX.XXXX.XXXX.XXXXXXXXXXXX.XX
```

```
#
# Parameters for elan: engineering
#
engineering.Address: 47.0005.80.ffe100.0000.f21a.01b9.0020480605b2.11
engineering.Accept: 002048080011 , 0020481020ef
engineering.Maximum_Frame_Size: 4544
#
# Parameters for elan: marketing|0
#
marketing|0.Address: 47.0005.80.ffe100.0000.f21a.01b9.0020480605b2.21
marketing|0.Accept:  002048080011 , 0020481020ef
#
# Parameters for elan: marketing|1
#
marketing|1.Address: 47.0005.80.ffe100.0000.f21a.01b9.0020480605b2.23
marketing|1.Accept:  002048080011 , 0020481020ef
#
# Parameters for elan: marketing|2
#
marketing|2.Address: 47.0005.80.ffe100.0000.f21a.00fe.0020480605b2.25
marketing|2.Accept:  002048080011 , 0020481020ef
```

6.4.2.3 The Default LECS Configuration File

A default LECS configuration file is installed with *ForeThought* 4.1.0. It is reproduced below for reference.

```
#
# This sample LECS configuration file contains the minimum information
# needed to start a default ELAN that all clients can join.  You MUST
# replace the '4's below with the ATM address of the LES.
#

#
# The search ordering of ELAN names
#
Match.Ordering: default

#
# Parameters for the default ELAN
#
default.Address: 44444444444444444444444444444444444444
default.Accept:  XXXXXXXXXXXXXXXXXXXXXXXXXXXXXXXXXXXXXX
```

Figure 6.3 - Default LECS Configuration File

NOTE Make a backup copy of the supplied LECS configuration file and work with the copy.

As supplied, this file allows you to set up a **`default`** ELAN that accepts any client that wants to join. Before you can use the supplied file, you must modify it as follows:

1. Obtain the ATM address of the machine where the LES for the default ELAN will be started. You must then modify the machine's ATM address by changing the selector byte. This modified address is the same address that is used when starting the **`default`** LES.
2. Substitute the address determined in step 1 for the string of "4"s in the **`default.Address`** statement of the LECS configuration file. The **`default.Accept`** string of "X"s should not be changed as this parameter allows any client who wishes to join the **`default`** ELAN.

3. Save the modified file.

NOTE

For a detailed discussion of how to configure an LECS configuration file other than the supplied default file, please refer to Section 6.4.2.1.

6.4.2.4 Administering LAN Emulation Services

LAN Emulation services include the LECS, LES, and BUS. Each of these services is a process that must be started so that they are available for LECs to attempt to use. These services need not run in the same machine. LAN Emulation services are controlled with the **lecs**, **le**, and **lane** commands.

NOTE

Additional information about the **lecs**, **le**, and **lane** commands may be obtained from their respective on-line man pages. See also Chapter 8 of this manual.

Once an LECS configuration file has been configured (refer to Section 6.4.2.1), the LECS process may be started using the lane command at the console. The following sample command line starts an LECS on local address **0x1f** using a configuration file called **lecs.cfg**.

```
lane start lecs -f lecs.cfg -s 0x1f
```

To stop the LECS process, enter the following command:

```
lane stop 0x1f
```

Similarly, to start an LES and BUS on local addresses **0x0f** and **0x2f** (emulating a 16 Mbps token-ring LAN named **admin** with an MTU size of 18190 bytes), enter the following commands:

```
lane start le -name admin -type token-ring -size 18190 -bus 0x2f

lane start le -name admin -type token-ring -size 18190 -les 0x0f 0x2f
```

To stop the LES and BUS that are running on local addresses **0x0f** and **0x2f**, enter:

```
lane stop 0x0f
```

followed by,

```
lane stop 0x2f
```

To start an "intelligent" bus (i.e., LES/BUS pair) for ELAN **marketing** (an emulated ethernet LAN with an MTU size of 1516 bytes)on local addresses **0x21** and **0x22**, enter:

```
lane start le -name marketing -type ethernet -size 1516 -ibus 0x21 0x22
```

Because the default LAN type is ethernet and the default MTU size is 1516, the previous command could also be issued as:

```
lane start le -name marketing -ibus 0x21 0x22
```

To stop the LES/BUS pair, enter:

```
lane stop 0x21
```

6.4.2.5 Administering LECs using the `elconfig` Command

LECs are controlled from the command line with the **`elconfig`** command. A detailed explanation of the syntax and usage of the **`elconfig`** command is available on-line in the **`elconfig`** man page, or in this manual in Chapter 8.

NOTE

LECs that you start with the **`elconfig`** command require a functioning network interface (for example, **`el0`**). Refer to Section 4.1 of this User's Manual for information about configuring the appropriate network interface(s).

Starting a LEC

For example, if you want to start a LEC that will attempt to join ELAN **`engineering`**, enter the following command:

```
elconfig add engineering
```

By default, the above command starts a LEC (on the local host) that attempts to contact the LECS on the "well-known" address as defined by the ATM Forum's LAN Emulation standards (**`47.0079.00.000000.0000.0000.0000.00A03E000001.00`**). This LEC, by default, has an ATM address based on the host adapter card's ATM (an unused selector byte is chosen to make the resulting ATM address unique). Consequently, each LEC "looks" like just another adapter card to other users on the network. You may also assign an ATM address to the LEC. If you choose to assign LEC ATM addresses manually, be careful that you assign each LEC a unique address.

Similarly, if you want to start a LEC that will attempt to join an ELAN already specified for that LEC in the LECS configuration file, enter the following command:

```
elconfig add -auto
```

If you want a LEC to use an LECS running at an address other than the well-known one, enter a command similar to the following:

```
elconfig set -lecs <address>
```

where *`<address>`* is the ATM address of the LECS that you want the LEC to use.

If you do not want the LEC to use an LECS, enter the following command:

```
elconfig set -lecs -manual
```

In this case, you must specify the ATM address of the LES that you want the LEC to use when you start the LEC. For example:

```
elconfig add engineering -les <address>
```

where *<address>* is the ATM address of the LES that you want the LEC to use.

Deleting a LEC

If you want to delete a LEC from an ELAN (**engineering**, for example), enter the following command:

```
elconfig delete engineering
```

This terminates the connections to the engineering LES and BUS and removes the network interface (e.g., **el0**) associated with the LEC.

CAUTION

All operating systems except Solaris impose the following restriction:

If you configure two LECs on the same ELAN (each having IP ARP table entries for the other in their respective system ARP caches), then later remove the LECs from the ELAN, you must manually delete the system ARP cache if you want to add the LECs back again to the **same** ELAN and IP subnet. Failure to do so may result in the two systems being unable to re-establish IP connectivity.

LEC Failover

An added feature of *ForeThought 4.1.0* software is the LEC failover mechanism. This feature allows multiple redundant services to be configured for an ELAN. Consequently, to start LECs that join ELAN marketing and make use of the failover mechanism set up in the sample LECS configuration file, enter the following commands:

```
elconfig add 'marketing|0'
```

followed by,

```
elconfig add 'marketing|1'
```

and then,

```
elconfig add 'marketing|2'
```

NOTE

Be sure to use the single quote marks to enclose the ELAN names because of the use of the shell meta-character "**|**".

The above commands start three LECs. Initially, the LEC that connects to ELAN **marketing|0** services is the active LEC. If **marketing|0** services fail, the LEC associated with ELAN **marketing|1** services becomes active. Periodically, the LEC associated with ELAN **marketing|0** attempts to re-establish service. If both **marketing|0** and **marketing|1** services fail, the LEC associated with ELAN **marketing|2** will then become active, (and periodically attempt to reconnect to **marketing|0** and **marketing|1**). Note that you may define as much redundancy into your system as resources allow.

CAUTION

Deleting the currently active failover LEC removes the network interface (e.g., **el0**) associated with **all** of the failover LECs, causing the other LECs in the failover mechanism to lose IP connectivity.

6.4.2.6 Using `elarp`

The **`elarp`** command is used to display and (optionally) delete MAC-to-ATM ARP table entries used in conjunction with ELANs. (ARP table entries that are not related to ELANs may be displayed and controlled with the **`arp`** command as described in Chapter 4.)

Displaying ARP Table Information

You can display all of the current ARP table ELAN-related entries by entering the following command:

`elarp show -all`

Similarly, to display all of the ARP table entries for the **`engineering`** ELAN, you would enter:

`elarp show -elan engineering`

Finally, to display the ARP table entry for a particular host, enter:

`elarp show -mac`

The following is the format of a typical ARP table entry displayed in response to an **`elarp show`** command:

```
00:20:48:10:0D:65 at 0x45.000580ffe1000000.f215149c002048100d65.02
ElanName=engineering flags=() addrTTL=300 vcTTL=1200 vpi.vci=0.49
```

The first line gives the MAC-to-ATM address mapping. The second line gives the name of the ELAN, flag status, the address mapping time-to-live and connection time-to-live (in seconds), and the virtual path and channel identifiers used by the host at the mapped address.

Deleting ARP Table Information

All ELAN-related ARP table entries may be deleted by entering the following command:

`elarp delete -all`

This command deletes all ELAN-related dynamic address mappings and closes the corresponding SVCs to all hosts in the table.

Likewise, to delete all ARP table entries associated with the **engineering** ELAN, enter:

elarp delete -elan engineering

Similarly, to delete the ARP table entry for a given MAC address, enter:

elarp delete -mac *<MAC address>*

6.4.2.7 Using leq

Each LES that you start maintains a table containing the MAC addresses registered on the ELAN, together with their corresponding ATM addresses. This table is known as the **LE.ARP** table (similar to a telephone directory). It is this table that provides address information (via the LES) to a LEC when a LEC wishes to communicate with another host whose address it does not know. The leq command is a tool used to display ELAN information obtained from the **LE.ARP** table.

An ELAN is identified either by name, or by the address of its LES. If a name is used, the LES address is discovered by **leq** querying the LECS either at the well-known address (default), or at a user-specified LECS address.

If a LES address is used, address arguments to **leq** may be given:

- by specifying the SEL octet of a local address in decimal (e.g., **42**) or hexadecimal (e.g., **0xfa**), or
- by specifying the full 20-octet ATM address of a non-local address with 40 hexadecimal digits and optional period separators where desired (e.g., **47.0005.80.ffe100.0000.f215.0f5b.002048102aef.00**)

Thus, to query and list the MAC to ATM address mappings of all clients registered in the ELAN named **engineering**, enter:

leq engineering

The resulting display would be similar to the following:

```
ELAN Name: "engineering"
  00-20-48-10-2a-ef -> 47.0005.80.ffe100.0000.f215.0f5b.002048102aef.00
  00-20-48-11-28-9b -> 47.0005.80.ffe100.0000.f21a.01cd.00204811289b.00
  00-20-48-11-27-eb -> 47.0005.80.ffe100.0000.f21a.01cd.0020481127eb.00
```

More detailed information about the ELAN may be obtained using the **-l** (long output format) option:

leq -l engineering

The resulting display would be similar to the following:

```
ELAN Name: "engineering"
  LES: 47.0005.80.ffe100.0000.f215.0f5b.002048102aef.06
  BUS: 47.0005.80.ffe100.0000.f215.0f5b.002048102aef.07
  LAN Type: Ethernet/IEEE 802.3Maximum Data Frame Size: 1516
  Non-proxy Control Distribute VCC: 0.34
  Proxy Control Distribute VCC: -.-

  LEC #1 at 47.0005.80.ffe100.0000.f215.0f5b.002048102aef.00 (non-proxy)
  00-20-48-10-2a-ef -> 47.0005.80.ffe100.0000.f215.0f5b.002048102aef.00
  Control Direct VCC: 0.184

  LEC #2 at 47.0005.80.ffe100.0000.f21a.01cd.00204811289b.00 (non-proxy)
  00-20-48-11-28-9b -> 47.0005.80.ffe100.0000.f21a.01cd.00204811289b.00
  Control Direct VCC: 0.189

  LEC #3 at 47.0005.80.ffe100.0000.f21a.01cd.0020481127eb.00 (non-proxy)
  00-20-48-11-27-eb -> 47.0005.80.ffe100.0000.f21a.01cd.0020481127eb.00
  Control Direct VCC: 0.199
```

This format includes:

- the ATM addresses of the LES and BUS for the ELAN named **engineering.**
- the virtual path and channel identifiers of the Control Distribute VCC. (Recall from the discussion in Section 6.3 that this is the connection that the LES sets up with each LEC in its ELAN.)
- the MAC to ATM address mapping for each LEC in the **engineering** ELAN, together with the virtual path and channel identifiers of the associated Control Direct VCC. (This is the connection that each LEC sets up with the LES.)

6.4.2.8 Using `lestat`

`lestat` allows you to display statistics about the LES and BUS for a given ELAN. The following lists the statistical types contained in each line of output:

JoinReq	Number of LE_JOIN requests handled by the LES.
ARPReq	Number of LE_ARP requests handled or forwarded by the LES.
Unknown	Number of unexpected LE control frames received (and dropped) by the LES.
UniPkts	Number of unicast packets forwarded by the BUS.
UniBytes	Number of unicast bytes forwarded by the BUS.
MulPkts	Number of multicast packets forwarded by the BUS.
MulBytes	Number of multicast bytes forwarded by the BUS.
FlshRq	Number of LE_FLUSH requests handled by the BUS.
Unknown	Number of other LE control frames received (and dropped) by the BUS.

For example, entering the command:

```
lestat engineering
```

results in the display of the LES and BUS statistics (i.e., the absolute values of the counters) for the *`engineering`* ELAN up to the point in time at which you issued the **`lestat`** command.

Similarly, you can cause the statistics for a specified ELAN to be updated and displayed at regular intervals. For example, the command:

```
lestat engineering 30
```

displays the absolute values of the LES and BUS counters for the *`engineering`* ELAN at the point in time at which you issued the **`lestat`** command, followed every 30 seconds by display of the *differences* in value between successive readings.

CHAPTER 7 ATM Network Configurations

After installing a FORE Systems ATM adapter, there are several physical configurations (network topologies) that may exist. The most likely configurations are:

- FORE adapters in a back-to-back configuration, in which they are directly connected to one another
- FORE adapters connected to a *ForeRunner* ATM Switch
- FORE adapter connected to an ATM product from a different manufacturer

This chapter describes methods for ensuring communications in all these network configurations.

7.1 Back-to-Back Adapter Configuration

7.1.1 SPANS Signalling

When using FORE's proprietary signalling protocol, SPANS, it is possible to configure two FORE adapters in a back-to-back mode for a direct connection. To ensure proper communication, the adapter must be cabled correctly and IP addresses must be assigned (for more information on IP address assignment, see Chapter 4, Network Interface Administration). An intervening switch is NOT needed to establish this connection. This configuration is depicted in Figure 7.1.

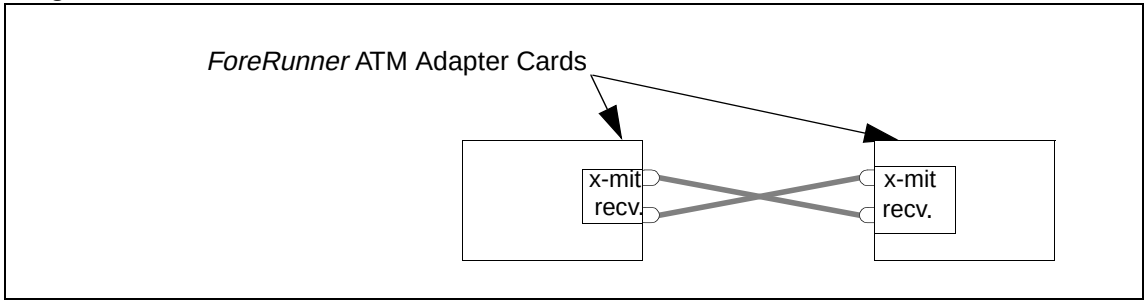

Figure 7.1 - Back-to-Back Configuration with SPANS Signalling

7.2 Adapter-to-FORE ATM Switch Configuration

ForeRunner ATM switches support the SPANS signalling protocol. If an ATM adapter is connected to a *ForeRunner* ATM switch, connections can be automatically created between the adapter and other SPANS-capable devices, such as other *ForeRunner* ATM adapters and the switch itself. In this topology, the only requirements are the physical connection between the adapter and assignment of correct IP addresses to ensure proper communication (for more information on assigning IP addresses, see Chapter 4, Network Interface Administration).

When UNI 3.0 or 3.1 signalling is used, it is no longer possible to connect adapters directly in a back-to-back mode because the signalling protocols UNI 3.0 and UNI 3.1 do not support a direct adapter to adapter connection. Instead, a UNI 3.0 or 3.1 compliant switch, such as the FORE Systems ASX series ATM switch must be used between the two adapters. This configuration is depicted in Figure 7.2.

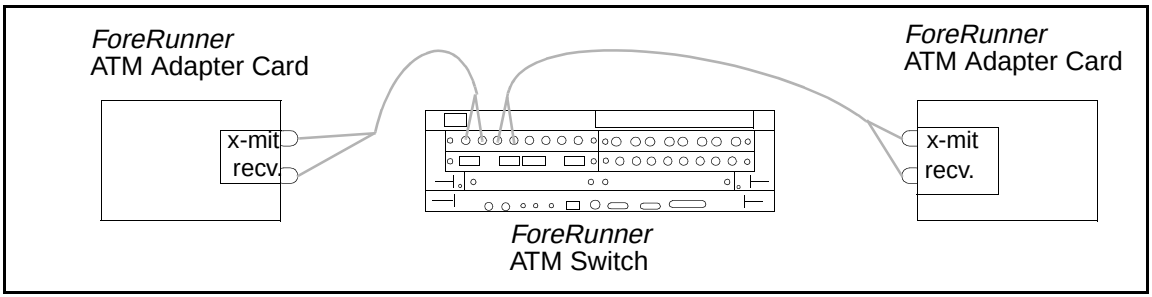

Figure 7.2 - Minimum Configuration with UNI 3.0 or UNI 3.1 Signalling

7.3 Adapter-to-Other Vendor's Equipment Configuration

If an ATM adapter is connected to ATM equipment that does not support the SPANS signalling, UNI 3.0 signalling, or UNI 3.1 signalling, PVCs must be used for ATM connections. In this case, the devices must be properly cabled and correct IP addresses must be assigned to the various devices. To make any connections, SPANS signalling must be disabled on the adapter and PVCs must be established over the ATM adapter. For additional information on connecting an adapter card to other vendor's equipment, please see Chapter 4, Network Interface Administration and Chapter 8, Additional Administration Information in this document.

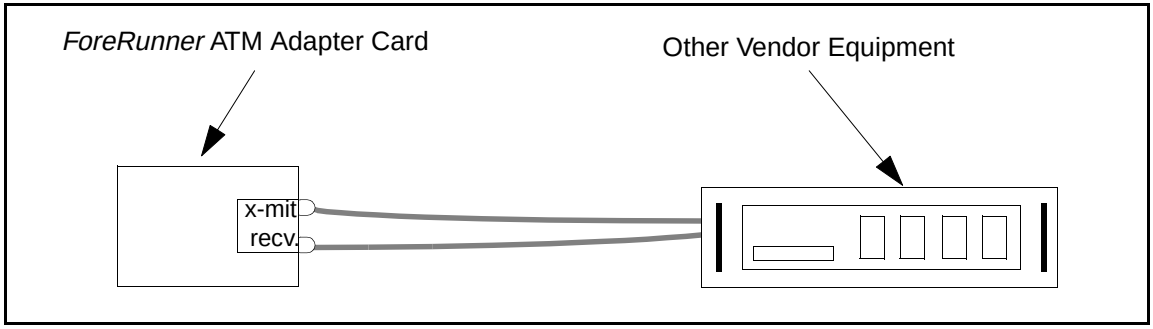

Figure 7.3 - Adapter-to-Other Vendor Configuration

CHAPTER 8 Additional Administration Information

8.1 Additional Software and Manual Pages

This *ForeRunner* SBA-200E release contains administrative and example programs, along with on-line manual pages. Please make these files accessible to ATM application programmers and system administrators as appropriate.

By adding the **`/usr/fore/etc`** directory to the **`PATH`** environment variable, the **`/usr/fore/man`** directory to the **`MANPATH`** environment variable, and the **`lib`** directory to the **`LD_LIBRARY_PATH`** environment variable, you will make the files available from the working directories of the people who will use them.

NOTE

If you installed your software in a directory other than those given above, be sure to set the environment variables accordingly.

8.2 SBA-200E Administrative Programs

The following *ForeRunner* SBA-200E administrative programs are included with this release of the software:

asxmon Displays the state of the switch and of all its active ports.

atmarp Shows and manipulates ATM ARP (Address Resolution Protocol) entries maintained by the SBA-200E device driver. This is also used to establish PVC connections.

atmconfig Used to enable or disable SPANS signalling. Also used to set MTU size, OC3 and various other parameters.

atmstat Shows statistics gathered about the SBA-200E by the device driver. These statistics include ATM layer and ATM adaption layer cell and error counts. This can also be used to query other hosts via SNMP.

cchan Used to manage virtual circuits on a FORE Systems ATM switch.

cpath Used to manage virtual paths on a FORE Systems ATM switch.

cport Used to monitor and change the state of ports on a FORE Systems ATM switch.

looptest Tests an ATM interface for basic cell reception and transmission functionality. It is usually used for diagnostic purposes to determine if an interface is functioning properly.

snmpd An SNMP agent for the SBA-200E.

topology Displays the topology of a FORE Systems ATM network. An updated topology can be periodically re-displayed by use of the interval option.

elarp Shows and manipulates MAC and ATM address mappings for LAN Emulation Clients (LECs).

elconfig Shows and modifies LEC configuration. Allows the user to set the ATM address of the LAN Emulation Configuration Server (LECS), display the list of Emulated LANs (ELANs) configured in the LECS for this host, display the list of ELANs locally configured along with the membership state of each, and locally administer ELAN membership.

le Implements both the LAN Emulation Server (LES) and the Broadcast / Unknown Server (BUS).

The LAN Emulation Server (LES) implements the control coordination function for an Emulated LAN. The LES provides a facility for registering and resolving MAC addresses to ATM addresses. Clients may register the LAN destinations they represent with the LES. A client will also query the LES when the client wishes to resolve a MAC address to an ATM address. The LES will either respond directly to the client or forward the query to other clients so they may respond.

The Broadcast / Unknown Server (BUS) handles data sent by an LE client to the broadcast MAC address (FF-FF-FF-FF-FF-FF), all multicast traffic, and initial unicast frames which are sent by an LE client before the data direct target ATM address has been resolved.

lecs The LAN Emulation Configuration Server (LECS) implements the assignment of individual LE clients to different emulated LANs. Based upon its own policies, configuration database and information provided by clients, it assigns any client which requests configuration information to a particular emulated LAN service by giving the client the LAN Emulation Server's ATM address.

lecs.cfg Provides information on the content and syntax of the LECS configuration file.

lane Provides control over the execution of the LAN Emulation Server (LES), Broadcast / Unknown Server (BUS), and LAN Emulation Configuration Server (LECS) on the local host.

leq Provides information about an emulated LAN (ELAN). This information is obtained from the LES, and includes MAC addresses registered on the ELAN together with their corresponding ATM addresses.

lestat Provides statistical information about the LES and BUS

An overview of the administrative programs listed above is found in the **`atm_intro (8C)`** manual page. For more details about these programs, please see the ATM network management manual pages located in Section 8 of the on-line manual. The man pages for LAN emulation commands are reproduced on the following pages for reference.

8.2.1 elarp(8c)

NAME

elarp – display or manipulate MAC to ATM address mappings

SYNOPSIS

elarp show -all | **-elan** *elan* | **-mac** *MAC* [**-layer3**]

elarp delete -all | **-elan** *elan* | **-mac** *MAC* [**-unit** *unit*] [**-vc** | **-addr**]

DESCRIPTION

elarp is a tool to display and delete MAC-to-ATM address table entries and associated Switch Virtual Circuits (SVCs). Used in conjunction with the ATM Forum LAN Emulation Client (LEC).

COMMANDS

show

If the **-all** flag is used, all current ARP table entries are displayed. The **-elan** flag will display all ARP entries for elan *elan*. If the **-mac** flag is used, the ARP entry for MAC address *MAC* is displayed. The time to live (TTL) in seconds for both the connections and address mappings are displayed. If the **-layer3** flag is specified, the Layer 3 (eg. IP) address to MAC address table entries are also displayed. If more than one MAC address is associated with an ATM address, then all the MAC-to-ATM address mappings are shown in a single entry.

delete

The **-all** and **-elan** flags will delete all dynamic address mappings from the ARP table and close all SVCs to all hosts in the table, or all hosts on elan *elan*, respectively. The **-mac** flag will delete the single dynamic address mapping and SVC for *MAC*. The address mappings and SVCs may also be deleted independently. **-vc** is used to only close the SVCs specifed by **-all, -elan,** or **-mac. -addr** is used to only delete the dynamic address mappings specified by **-all, -elan,** or **-mac** from the ARP table.

EXAMPLE

The following examples display an address mapping for a host on elan FORE_elan.

```
example% elarp show -elan FORE_elan
0:20:48:10:d:65 at 0x45.000580ffe1000000.f215149c002048100d65.02
      ElanName=FORE_elan flags=() addrTTL=300 vcTTL=1200 vpi.vci=0.49
```

```
example% elarp show -elan FORE_elan -layer3
FORE_host (11.3.1.69) at 0:20:48:10:d:65
      at 0x45.000580ffe1000000.f215149c002048100d65.02
      ElanName=FORE_elan flags=() addrTTL=300 vcTTL=1200 vpi.vci=0.49
```

```
example% elarp show -all
8:0:9:e3:44:d0
8:0:20:7a:c2:8d
8:0:20:78:ef:9a at 0x47.0005.80.ffe100.0000.f21a.264c.00a0360081da.00
  ElanName=grey flags=() addrTTL=176 vcTTL=922 vpi.vci=0.291
```

RELEASE

__VERSION__ __DATE__

SEE ALSO

arp(8C)

8.2.2 elconfig(8c)

NAME

elconfig – ATM Forum LAN Emulation configuration tool

SYNOPSIS

elconfig show *elan* "|"-auto "|"-all|-configured|-lecs|-lecs "|"-addr [**-unit** *unit]*

elconfig add *elan* "|"-auto [**-if** *interface*] [**-lec** *ATMaddress***]** [**-les** *ATMaddress* **[-unit** *unit*]]

elconfig delete *elan* |**-auto** "|"-lecs [**-unit** *unit***]**

elconfig set -mtu

elconfig set -lecs *ATMaddress* | "-wellknown"| -manual [**-unit** *unit*]

DESCRIPTION

elconfig is a tool to display and modify FORE Systems' ATM Forum LAN Emulation Client (LEC) configuration. **elconfig** allows the super-user to set the ATM address of the LAN Emulation Configuration Server (LECS), display the list of Emulated LANs (ELANs) configured in the LECS for this host, display the list of ELANs locally configured along with the membership state of each, and locally administer ELAN membership.

COMMANDS

show

If the single flag **-all** is used, the name and LES's ATM address for each ELAN returned by the LECS is displayed. To display the name, the ATM addresses of the LE Services, and the local network interface name of each ELAN currently configured in the system, the -configured flag is used. Since the LE Services' ATM addresses may be acquired dynamically, only those addresses that have been learned will be displayed. In addition, if connections exist to the LE Services, the VPI/VCI pairs for each connection are displayed. Alternatively, a single ELAN's configuration information may be displayed by specifying the single argument *elan*. To retrieve the ATM address of the current LECS, the **-lecs** flag is used. To retrieve the ATM address of adapter *unit*, the **-addr** flag is used.

add

The add command enables the user to join a particular ELAN and specify certain configuration parameters. The **-auto** flag is used to specify that the LEC would join the ELAN that is returned by the LECS for this LEC. The **-if** flag maps *elan* to the network interface *interface* (e.g. **el0**), providing a mapping between ELAN name and network interface name. The **-les** flag allows the specification of the LES's ATM address as *ATMaddress* for joining ELANs whose configuration information is either not returned by the LECS, the LECS is not specified, or one is not available. **-lec** sets the LEC's ATM address to *ATMaddress* for communication with this ELAN's services. If not specified, the LEC will base the ATM address on the adapter's ATM address choosing an unused selector-byte. The **-unit** option may be specified to add an ELAN on a physical interface other than the first. This is only valid when used with the **-les** flag.

delete

Used with *elan*, unjoin the specified ELAN, terminating connections to both its LES and BUS and removing the network interface associated with this ELAN. Some systems do not delete the system arp cache entries, when the network interface is deleted. On such systems if the interface is brought down or deleted, and the remote system's MAC address changes, then when the interface is brought up connectivity may not be established due to wrong arp cache entries. The system administrator must delete such arp cache entries manually. **-auto** flag is used to delete Automatic ELAN that was specifed by -auto flag during the add operation. Used with the **-lecs** flag, remove the current LECS from the configuration. This command is only allowed if no ELANs are currently configured from this LECS.

set

If the single argument, *ATMaddress* is used, set the ATM address of the LECS to *ATMaddress* and mark this LECS as current. If another set command is invoked with a different LECS address, this LECS is now marked as current. The **add** and **delete** commands may only be applied to ELANs returned by the current LECS. The **-manual** flag places the host in a manual configuration mode, configuration information will not be retrieved from the LECS and the addition of ELANS will require the user to set the LES address.

set

(Solaris only) Used with the **-mtu** flag, sets the interface MTU to match that of the associated ELAN. **elconfig** handles the initial interface MTU configuration, subsequent MTU reconfigurations may be handled with **-mtu**.

NOTES

(Solaris only) Although the interface MTU may be modified through **ifconfig(1M)**, **elconfig** is the recommended method for modifying the interface MTU of LECs. For compliance with the ATM Forum LAN Emulation 1.0 specification, the interface MTU must not exceed the MAXIMUM-FRAME-SIZE of the Emulated LAN of which it is a member. **elconfig** ensures this compliance.

RESTRICTIONS

On Solaris systems an ELAN can be deleted only when there are no longer users attached through DLPI. For attached protocols, the associated interface must first be configured "down" through **ifconfig(8C)** to detach them from the ELAN. If the user attempts to delete an ELAN which has any DLPI user, the message 'elconfig: ELAN in use' will be displayed. On other systems, the interface associated with an ELAN must first be configured "down" through **ifconfig(8C)** before deleting the ELAN. If the user attempts to delete an ELAN which is "up", the message 'elconfig: ELAN in use' will be displayed.

RELEASE

__VERSION__ __DATE__

SEE ALSO

ifconfig(8C)

8.2.3 le(8c)

NAME

le – LAN Emulation Server and Broadcast / Unknown Server

SYNOPSIS

le [*options*] **–les** *local-les-addr bus-addr*

le [*options*] **–bus** *local-bus-addr*

le [*options*] **–ibus** *local-les-addr local-bus-addr*

DESCRIPTION

The LAN Emulation Server (LES) implements the control coordination function for an Emulated LAN. The LES provides a facility for registering and resolving MAC addresses to ATM addresses. Clients may register the LAN destinations they represent with the LES. A client will also query the LES when the client wishes to resolve a MAC address to an ATM address. The LES will either respond directly to the client or forward the query to other clients so they may respond.

The Broadcast / Unknown Server (BUS) handles data sent by an LE client to the broadcast MAC address (FFFFFFFFFFFF), all multicast traffic, and initial unicast frames which are sent by an LE client before the data direct target ATM address has been resolved.

The **le** program implements both the LES and BUS.

OPTIONS

–unit *unit-number*
Start the service on the given ATM adapter unit. The default unit number is zero.

–name *elan-name*
Specify an ELAN name for the service. The default name is the zero-length string.

–type *lan-type*
Set the emulated-LAN type to *ethernet* or *token-ring*.

–size *maximum-frame-size*
Set the maximum frame size to one of 1516, 4544, 9234, or 18190.

ARGUMENTS

Local address arguments to **le** are given by specifying the SEL octet in decimal (e.g., 42) or hexadecimal (e.g., 0xfa). To denote a non-local address specify the full 20-octet ATM address with 40 hexadecimal digits (and optional period separators where desired). For example,

47.0005.80.ffe100.0000.f215.0f5b.002048102aef.09

A non-local address can also be given as a local SEL octet.

–les *local-les-addr bus-addr*
Start an LES on *local-les-addr* that answers ARP requests for the broadcast MAC address with *bus-addr*.

–bus *local-bus-addr*
Start a BUS on *local-bus-addr*.

–ibus *local-les-addr local-bus-addr*

Start an LES on *local-les-addr*, and an intelligent BUS on *local-bus-addr*. The LES will answer ARP requests for the broadcast MAC address with the BUS's address, and the BUS will utilize the LES's ARP cache to direct unicast frames.

Any of the arguments may be repeated to specify arbitrary combinations of LESs and BUSs, each with their own unique address.

EXAMPLES

To start an LES and BUS on local addresses 8 and 9, and an LES and intelligent BUS on local addresses 0x1a and 0x1b:

```
le –les 8 9 –bus 9 –ibus 0x1a 0x1b
```

To start an LES on local address 42 that references a non-local BUS:

```
le –les 42 47.0005.80.ffe100.0000.f215.0f5b.002048102aef.09
```

SEE ALSO

lecs(8C), **leq**(8C)

ATM Forum LAN Emulation SWG, *LAN Emulation Over ATM Specification – Version 1.0*, December, 1994

DIAGNOSTICS

Most error and tracing messages are written to the standard output. Some messages are syslog()ed at priorities LOG_ERR and LOG_DEBUG.

RELEASE

__VERSION__ __DATE__

8.2.4 lecs(8c)

NAME

lecs – LAN Emulation Configuration Server

SYNOPSIS

lecs [**–a** *LES-addr*] [**–d**] [**–f** *file*] [**–s** *SEL*] [**–u** *unit*] [*LECS-addr* | *none*]

DESCRIPTION

The LE Configuration Server (LECS) implements the assignment of individual LE clients to different emulated LANs. Based upon its own policies, configuration database and information provided by clients, it assigns any client which requests configuration information to a particular emulated LAN service by giving the client the LAN Emulation Server's ATM address.

OPTIONS

–a Specify a default LES ATM-address for use in case the configuration file is inaccessible.

–d Run in the foreground. Normally, **lecs** will fork and detach from the controlling terminal.

–f Specify the configuration file name.

–s Specify the selector octet value to use for the LECS's local address (default 0). Decimal conversion is applied unless the value is prefixed with "0x", in which case hexadecimal is used.

–u Specify the ATM adapter unit to be used (default 0).

Either a configuration file name or a default LES address (or both) must be given.

ARGUMENTS

If a final 20-octet ATM address is given as an argument (as 40 hexadecimal digits with optional period separators) it is used as the LECS's well-known address. Alternatively, if the word *none* is specified, no well-known address is registered. If no argument is given, the default LECS address as defined by the ATM Forum LAN Emulation SWG (47.0079.00.000000.0000.0000.0000.00A03E000001.00) is used.

EXAMPLE

To start an LECS on local address 0x1f, and with a configuration file named *lecs.cfg*.

```
lecs -f lecs.cfg -s 0x1f
```

FILES

lecs.cfg
The configuration file (see **lecs.cfg**(5) for syntactic information).

lecs.*pid*
Contains the process ID of the **lecs** after a fork / detach.

SEE ALSO

lecs.cfg(5), **le**(8C)

ATM Forum LAN Emulation SWG, *LAN Emulation Over ATM Specification – Version 1.0*, December, 1994

DIAGNOSTICS

Disposition of diagnostics depends upon the setting of the **–d** option. With **–d**, error messages are written to *stderr* and informational messages are written to *stdout*. Each message is preceded with the name of the program and a time-of-day stamp. Without **–d**, all operational messages are syslog'ed; error messages at priority LOG_ERR, and informational messages at priority LOG_INFO. (Some debugging messages may also be produced at priority LOG_DEBUG.)

A non-zero exit status indicates some form of start-up error.

RELEASE

__VERSION__ __DATE__

8.2.5 lecs.cfg

NAME

lecs.cfg – LAN Emulation configuration file

SYNOPSIS

lecs.cfg

DESCRIPTION

1. Basic syntax

The LECS configuration file consists of a sequence of lines. Lines may be continued by escaping the end-of-line with a backslash, and any text after a '#' is treated as a comment.

Each line shall take the general form

[[group].]key : value

where a missing *group* (and perhaps '.') implies that the *key* and *value* apply to all groups. Leading and trailing white space, as well as any surrounding the ':', is ignored.

*Group*s are used to represent ELANs (by name) and prospective clients (by ATM or MAC address, or route descriptor). *Key*s are used to denote individual parameters within a *group*, while *value*s are used to denote values for those parameters.

The characteristics of an ELAN are defined by providing values for the following parameters:

Address
The ATM address of the LES.

LAN_Type
The type of emulated LAN, either **Ethernet/IEEE 802.3** or **IEEE 802.5**.

Maximum_Frame_Size
The size of the largest frame, either 1526, 4544, 9234, or 18190.

For example, to specify that the LAN type of the ELAN named *Corporate* is **Ethernet/IEEE 802.3**, and its maximum frame size is 1516 bytes, one would say:

Corporate.LAN_Type: Ethernet/IEEE 802.3

Corporate.Maximum_Frame_Size: 1516

Similarly, to specify a default maximum frame size of 1516 bytes for all ELANs defined in the configuration file, one would say:

.Maximum_Frame_Size: 1516

More specific control over client configuration can be achieved by providing values for the following parameters:

Control_TimeOut
Specifies the timing-out of request/response control frame interactions, in seconds. Minimum 10, Default 120, Maximum 300.

Maximum_Unknown_Frame_Count

Maximum_Unknown_Frame_Time
Limits the number of unicast frames sent to the BUS, in frames per second. Minimum 1 frame per 60 seconds, Default 1 frame per second, Maximum 10 frames per second.

VCC_TimeOut_Period
The period that a data connection may remain idle before being closed, in seconds. Default 1200.

Maximum_Retry_Count
Limits the number of LE_ARP requests. Minimum 0, Default 1, Maximum 2.

Aging_Time
The period that LE_ARP cache entries remain valid, in seconds. Minimum 10, Default 300, Maximum 300.

Forward_Delay_Time
Specifies the timing-out of non-local LE_ARP cache entries, in seconds. Minimum 4, Default 15, Maximum 30.

Expected_LE_ARP_Response_Time
The maximum time an LEC expects an LE_ARP request/response will take, in seconds. Minimum 1, Default 1, Maximum 30.

Flush_TimeOut
The maximum time an LEC expects an LE_FLUSH request/response will take, in seconds. Minimum 1, Default 4, Maximum 4.

Path_Switching_Delay
Minimum time between switching BUS and data paths without using the flush protocol, in seconds. Minimum 1, Default 6, Maximum 8.

Local_Segment_ID
The segment ID of the emulated LAN for an IEEE 802.5 source routing bridge.

Multicast_Send_VCC_Type

Multicast_Send_VCC_AvgRate

Multicast_Send_VCC_PeakRate
Signaling parameters for use when establishing the Multicast Send VCC.

Connection_Complete_Timer
The time period in which data or a READY_IND is expected, in seconds. Minimum 1, Default 4, Maximum 10.

2. Describing an ELAN

In order to define an ELAN we must mention its name as a *group* and give a *value* to its **Address** *key* denoting the ATM address of the ELAN's LES. For example,

Corporate.Address: 47000580FFE1000000000000000000204800000000

In addition, we might want to override any default LAN type and maximum frame size

Accounting.Address:47000580FFE1000000000000000000204844444444

Accounting.LAN_Type: IEEE 802.5

Accounting.Maximum_Frame_Size: 4544

or provide per-ELAN overrides for any configuration parameters.

Marketing.Address: 47000580FFE1000000000000000000204811111111

Marketing.Control_TimeOut: 120

Marketing.Expected_LE_ARP_Response_Time: 15

Marketing.Multicast_Send_VCC: Constant

Marketing.Multicast_Send_VCC_PeakRate: 2000

3. Describing a client

A client is defined by mentioning its ATM or MAC address, or token-ring route descriptor as a *group* and then giving the name of its ELAN as a *value* of the **LAN_Name** *key*.

47000580FFE1000000000000000000204822222222.LAN_Name: Accounting

002048ABCDEF.LAN_Name: Corporate

12F5.LAN_Name: Marketing

Overrides for configuration parameters can also be given on a per-client basis.

47000580FFE1000000000000000000204833333333.LAN_Name: Marketing

47000580FFE1000000000000000000204833333333.VCC_TimeOut_Period: 1200

47000580FFE1000000000000000000204833333333.Aging_Time: 30

4. Unmentioned clients

The easiest way to deal with otherwise unmentioned clients is to specify a single, default ELAN name.

.LAN_Name: Corporate

A more complex, but more flexible way is to list some rules for matching prospective-client ATM/MAC addresses or route descriptors. Each ELAN-name *group* can have two additional *key*s, **Accept** and **Reject**, whose *value*s are comma-separated lists of matching elements.

Each matching element is either: 1) a token-ring route descriptor, 2) a MAC address, 3) an ATM address and equal length bit mask, or 4) an ATM address containing 'don't care' semi-octets denoted by an 'X'. For example,

Marketing.Accept: 47000580FFE100000000000000000204800000000 \

Marketing.Accept: FFFFFFFFFFFFFF000000000000FFFFFF00000000,\

Marketing.Accept: 47000580FFE100XXXXXXXXXXXX002048XXXXXX00

Marketing.Reject: 47000580FFE100000000000000000204800000011

Accounting.Accept: 47000580FFE100XXXXXXXXXXXX002048XXXXXXXX

The two forms of ATM-address matching elements are functionally the same; the latter is shorter but only allows for masks whose semi-octets are all ones or all zeros, while the former allows for arbitrary masks. A prospective-client address is 'captured' by an ELAN name if the address matches one of the **Accept** elements but not one of the **Reject** elements (if present).

The order in which to apply the **Accept** and **Reject** rules is given by a **Match.Ordering** *group.key*, whose value is a list of ELAN names.

Match.Ordering: Marketing, Accounting

The names of all ELANs that have **Accept** elements must be included in **Match.Ordering**.

Finally, giving a simple, default **LAN_Name** of, say *Corporate* (as above), is similar to saying:

Corporate.Accept: XXXXXXXXXXXXXXXXXXXXXXXXXXXXXXXXXXXXXXXX

Match.Ordering: Corporate

5. Default configuration

If the configuration file cannot be read but a default LES address is given on the command line, a configuration equivalent to the following is constructed.

.LAN_Name: default

default.Address: <default-LES-address>

6. LECS Control Variables

Specifying values for keys in the **LECS** group provides control over the operation of the LECS process.

The value of the **VCC_TimeOut_Period** key is the number of seconds before an idle Configuration Direct VCC is automatically closed by the LECS (zero to disable the timer). For example,

LECS.VCC_TimeOut_Period: 1200

The LECS periodically checks whether the configuration file has been modified, and, if it has, the file is re-read. The length of this period in seconds is given by the **Reload_Period** key (zero to disable the timer).

LECS.Reload_Period: 300

The **Permanent_Circuits** key holds a comma-separated list of VPI.VCI pairs denoting the local ends of 0.17 PVCs on which the LECS should listen.

LECS.Permanent_Circuits: 0.42, 0.112

The LECS can provide the client with a fourteen-bit pattern to permute the MAC-address generation algorithm. This bit pattern is specified with the **MAC_Address_Base** key.

LECS.MAC_Address_Base: 38fe

Note that the values of the LECS Control Variables are **not** recomputed if/when the configuration file is re-read. This means, for example, that you cannot cause the LECS to listen on new PVCs by simply editing the configuration file — an LECS restart is required.

EXAMPLE

```
#
#The search ordering of ELAN names
#Match.Ordering: Corp
#
#Parameters for the Corp ELAN
#Corp.Address: 47.0005.80.ffe100.0000.f21a.01a9.00204806302a.00
Corp.Accept:  XX.XXXX.XX.XXXXXX.XXXX.XXXX.XXXX.XXXXXXXXXXXX.XX
```

SEE ALSO

lecs(8C)

ATM Forum LAN Emulation SWG, *LAN Emulation Over ATM Specification – Version 1.0*, December, 1994

RELEASE

__VERSION__ __DATE__

8.2.6 lane

NAME

lane – control LAN Emulation servers

SYNOPSIS

lane [*options*] **start le** <*le-arguments*>

lane [*options*] **start lecs** <*lecs-arguments*>

lane [*options*] **state**

lane [*options*] **status** <*local-addr*>

lane [*options*] **stop** <*local-addr*>

lane [*options*] **trace (up | down)** <*local-addr*>

DESCRIPTION

lane provides control over the execution of the LAN Emulation Server (LES), Broadcast/Unknown Server (BUS), and LAN Emulation Configuration Server (LECS) on the local host.

Each server may be started with given arguments, and examined or stopped via reference to its local address, <*local-addr*>. A local address is typically denoted simply as a SEL octet on the default ATM adapter. To specify a different adapter unit number use <*unit*>/<*SEL*> for the local address.

When a server is started, it is placed into its own session and process group, and detached from any controlling terminal. Error output from the server is passed to the system log at priority *daemon.err*, while normal output is passed at priority *daemon.info*. It is an error to start a server on a local address that is already in use.

If a server should terminate before it is stopped, **lane** will generate a system log message at priority *daemon.alert*.

OPTIONS

–le *path*
The pathname of the **le** executable. The default value is given by the LE environment variable if set, and is otherwise /usr/fore/etc/le.

–lecs *path*
The pathname of the **lecs** executable. The default value is given by the LECS environment variable if set, and is otherwise /usr/fore/etc/lecs.

–sockdir *path*
The directory into which UNIX-domain sockets will be placed. The default value is given by the SOCKDIR environment variable if set, and is otherwise ${TMPDIR}/.LANE-unix.

ARGUMENTS

start le –les *local-les-addr bus-addr*
Start an LES on *local-les-addr* that answers ARP requests for the broadcast MAC address with *bus-addr*.

start le –bus *local-bus-addr*
Start a BUS on *local-bus-addr*.

start le –ibus *local-les-addr local-bus-addr*
Start an LES on *local-les-addr*, and an intelligent BUS on *local-bus-addr*. The LES will answer ARP requests for the broadcast MAC address with the BUS's address, and the BUS will utilize the LES's ARP table to direct unicast frames. Use *local-les-addr* for **status** and **stop** requests.

start lecs *[–a LES-addr] [–f file] [–s SEL] [none]*
Start an LECS with a default LES address of *LES-addr* and configuration filename, *file*. Use the selector octet, *SEL* (default 0), to construct the local address. Optionally suppress the use of the well-known LECS address by giving a final argument of **none**.

state A list of all running servers and their arguments is printed.

status <*local-addr*>
The LAN Emulation server (LES, BUS, or LECS) using the local address, *local-addr*, is examined, and a status message printed.

stop <*local-addr*>
The LAN Emulation server (LES, BUS, or LECS) using the local address, *local-addr*, is stopped.

trace (up | down) <*local-addr*>
The tracing level of the LAN Emulation server (LES, BUS, or LECS) using the local address, *local-addr*, is increased (up) or decreased (down). Only two tracing levels are currently implemented, the higher of which generates *daemon.info* messages, and the lower of which (the default) suppresses them.

For further details on the arguments to **le** and **lecs**, see **le**(8C) and **lecs**(8C).

EXAMPLES

To start an LES and BUS on local addresses 0x0f and 0x1f (emulating a 16 Mbps token-ring with name "ELAN-1"), and an LECS on local address 0x20:

```
lane start le -name ELAN-1 -type token-ring \          -size 18190 -bus 0x1f
lane start le -name ELAN-1 -type token-ring \          -size 18190 -les 0x0f 0x1f
lane start lecs -s 0x20
```

To list all running servers:

```
lane state
```

To examine the status of the LES:

```
lane status 0x0f
```

To stop the LECS:

```
lane stop 0x20
```

ENVIRONMENT

LE
Pathname of the **le** executable.

LECS
Pathname of the **lecs** executable.

SOCKDIR
Directory into which UNIX-domain sockets will be placed.

TMPDIR
Default location of .LANE-unix socket directory.

FILES

/usr/fore/etc/le
Default ${LE}.

/usr/fore/etc/lecs
Default ${LECS}.

${TMPDIR}/**.LANE-unix**
Default ${SOCKDIR}.

/tmp
Default ${TMPDIR}.

SEE ALSO

le(8C), **lecs**(8C).

DIAGNOSTICS

A zero exit status indicates that a server was successfully started (start) or stopped (stop), or is currently running (status). Any non-zero exit status is accompanied by an error message indicating the reason for failure.

BUGS

The size of **state** output is currently limited to 8KB.

RELEASE

__VERSION__ __DATE__

8.2.7 leq

NAME

leq – Query the state of a LAN Emulation Server (LES)

SYNOPSIS

leq [**–lm**] [**–u** *unit*] [**–c** *lecs-addr*] *elan-name*

leq [**–lm**] [**–u** *unit*] *les-addr*

DESCRIPTION

leq provides information about an Emulated LAN (ELAN). This information is obtained from the LES, and includes MAC addresses registered on the ELAN together with their corresponding ATM addresses.

An ELAN is identified either by name, or by the address of its LES. If a name is used, the LES address is discovered by querying the LAN Emulation Configuration Server (LECS).

Address arguments to **leq** are given by specifying the SEL octet of a local address in decimal (e.g., 42) or hexadecimal (e.g., 0xfa), or by specifying the full 20-octet ATM address of a non-local address with 40 hexadecimal digits (and optional period separators where desired). For example,

47.0005.80.ffe100.0000.f215.0f5b.002048102aef.00

OPTIONS

–l Use the **l**ong output format, where all available information is printed.

–m Use the **m**achine-oriented output format, intended to be more easily parsed by administrative scripts.

–u *unit*
Use the given adapter unit number. Otherwise the first adapter with an assigned ATM address is used.

–c *lecs-addr*
Use the given address to contact the LECS (to map the ELAN name to an LES address) instead of the ATM-Forum specified LECS address.

EXAMPLES

List all registered clients in the ELAN named *Fred*.

```
% leq Fred
ELAN Name: "Fred"
  00:20:48:10:2a:ef -> 47.0005.80.ffe100.0000.f215.0f5b.002048102aef.00
  00:20:48:11:28:9b -> 47.0005.80.ffe100.0000.f21a.01cd.00204811289b.00
  00:20:48:11:27:eb -> 47.0005.80.ffe100.0000.f21a.01cd.0020481127eb.00
```

As above, but include information like LES and BUS address, and identify LE control VCCs.

```
% leq -l Fred
ELAN Name: "Fred"
  LES: 47.0005.80.ffe100.0000.f215.0f5b.002048102aef.06
  BUS: 47.0005.80.ffe100.0000.f215.0f5b.002048102aef.07
  LAN Type: Ethernet/IEEE 802.3     Maximum Data Frame Size: 1516
  Non-proxy Control Distribute VCC: 0.34
     Proxy Control Distribute VCC: -.-

 LEC #1 at 47.0005.80.ffe100.0000.f215.0f5b.002048102aef.00 (non-proxy)
  00:20:48:10:2a:ef -> 47.0005.80.ffe100.0000.f215.0f5b.002048102aef.00
  Control Direct VCC: 0.184

 LEC #2 at 47.0005.80.ffe100.0000.f21a.01cd.00204811289b.00 (non-proxy)
  00:20:48:11:28:9b -> 47.0005.80.ffe100.0000.f21a.01cd.00204811289b.00
  Control Direct VCC: 0.189

 LEC #3 at 47.0005.80.ffe100.0000.f21a.01cd.0020481127eb.00 (non-proxy)
  00:20:48:11:27:eb -> 47.0005.80.ffe100.0000.f21a.01cd.0020481127eb.00
  Control Direct VCC: 0.199
```

SEE ALSO

le(8C)

ATM Forum LAN Emulation SWG, *LAN Emulation Over ATM Specification – Version 1.0*, December, 1994

RELEASE

__VERSION__ __DATE__

8.2.8 lestat(8c)

NAME

lestat – Show LAN Emulation Server statistics

SYNOPSIS

lestat [**–u** *unit*] [**–c** *lecs-addr*] *elan-name* [*interval* [*rows*]]

DESCRIPTION

lestat displays the frame and byte counters gathered by the LAN Emulation Server (LES) and Broadcast and Unknown Server (BUS) on the ELAN named *elan-name*. If *interval* is specified, *lestat* summarizes activity during each *interval*-second period.

The first section of each output line contains **LES Statistics**:

JoinReq
Number of LE_JOIN requests handled by the LES.

ARPReq
Number of LE_ARP requests handled or forwarded by the LES.

Unknown
Number of unexpected LE control frames received (and dropped) by the LES.

The second section contains **BUS Statistics**:

UniPkts
Number of unicast packets forwarded by the BUS.

UniBytes
Number of unicast bytes forwarded by the BUS.

MulPkts
Number of multicast packets forwarded by the BUS.

MulBytes
Number of multicast bytes forwarded by the BUS.

FlshRq
Number of LE_FLUSH requests handled by the BUS.

Unknown
Number of other LE control frames received (and dropped) by the BUS.

OPTIONS

–u *unit*
Use the given adapter unit number. Otherwise the first adapter with an assigned ATM address is used.

–c *lecs-addr*
Use the given address to contact the LECS (to map the ELAN name to an LES address) instead of the ATM-Forum specified LECS address.

ARGUMENTS

elan-name

Specify the name of the emulated LAN whose counters are to be displayed. The ATM address of the LES/BUS can also be given.

interval

Specifies that *lestat* should loop, redisplaying the counters every *interval* seconds. The first row of output gives absolute values for the counters, while subsequent rows give differences.

rows

lestat attempts to automatically determine the number of rows on the output device so that it can redisplay the column headers before they scroll off the screen. A *rows* argument overrides this automatic determination.

SEE ALSO

leq(8C), **atmstat**(8C)

RELEASE

__VERSION__ __DATE__

CHAPTER 9 Software Interfaces

9.1 Berkeley Socket Interface

The SBA-200E device driver supports network communication using the Internet protocol family, via the user-level Berkeley socket interface (or any APIs that use the TCP/IP protocol suite). System functions that use the socket interface, such as NFS and NIS, as well as socket-based applications, will work as is, over your ATM network.

9.2 Application Programming Interface

The SBA-200E device driver also supports FORE Systems' user-level ATM API (Application Programming Interface). The API allows you to develop an application that creates a connection with another ATM API application on the ATM network. Once a connection is established, data may be transmitted via the ATM API from one ATM application to another. An in-depth description of the ATM API can be found in the **atm_intro** man page. Consult the ATM API man pages located in Section 4 of the on-line manual for more information.

NOTE

Load balancing should be off (i.e., not used) when using the API library functions. Refer to the **atm_gethostbyname(4N)** man page for more details.

9.2.1 Concurrent Server Model for the API

FORE's ATM API supports both the concurrent server model and the iterative server model. A concurrent server can handle multiple client requests simultaneously. As each new client connection is established, the server spawns a new process to handle the connection. The new server process communicates with the client exclusively and then terminates when complete. The original server process is free to listen for new client connections during this interval.

The listening file descriptor and the accepting file descriptor arguments to **atm_accept** may, but need not, be different. To implement a concurrent server, once a call to **atm_listen** returns, the server should obtain a new file descriptor from **atm_open** to use to accept the connection. **atm_accept** should then be called with the listening descriptor as well as the new accepting descriptor. After **atm_accept** returns successfully, **fork**(2V) can be called to

spawn a new process to handle the new connection. All calls to the **atm_recv** and **atm_send** family of functions within the new process should use the new accepting descriptor.

9.3 Rate Control

Traffic is submitted to the network such that the specified peak cell rate (PCR) is not exceeded. Rate control can be specified for the following types of connections:

- All PVCs
- FORE IP SVCs
- FORE API

An option has been added to atmarp to set the PCR for FORE IP PVCs and Classical IP PVCs See "atmarp(8c)" on page 16. The Quality of Service (QOS) parameter is used to specify the PCR for FORE API connections (only the **peak_bandwidth** argument within the QOS parameter is interpreted by the ATM layer).

9.4 Support for Network Maintenance

On SunOS, the Berkeley Packet Filter (BPF) and the Network Interface Tap (NIT) are supported. On Solaris, the Data Link Provider Interface is supported. This support is covered in greater detail in the following two sections.

9.4.1 Support for BPF and NIT

The interfaces to BPF and NIT allow **etherfind**, **nfswatch**, and **tcpdump**, among others, to be run on FORE ATM interfaces. In order to be compatible with BPF and NIT, an Ethernet header is prepended to every packet sent to these interfaces. The prepended Ethernet header has the following properties:

- If the packet was sent from the ATM interface, the least significant 24 bits of the Ethernet source address are the VPI/VCI on which the packet was sent. The Ethernet destination address will be zero.
- If the packet was received from the ATM interface, the least significant 24 bits of the Ethernet destination address are the VPI/VCI on which the packet was received. The Ethernet source address will be zero.

- IP packets will be delivered with the Ethertype field set to ETHERTYPE_IP. ARP requests and replies will be delivered with the Ethertype field set to ETHERTYPE_ARP.

NOTE

BPF and NIT must be configured into the kernel (either together or separately, depending upon the desired functionality) if support for a particular interface is desired.

9.4.2 Data Link Provider Interface

Support for the Data Link Provider Interface (DLPI) commands **DL_PROMISCON_REQ** and **DL_PROMISCOFF_REQ** is provided on Solaris platforms. The addition of these commands allows **snoop**(1M) to be run on FORE ATM interfaces. In order to be compatible with **snoop**, every packet sent up to a promiscuous listener (a node that receives ALL traffic) is prepended with an Ethernet header. The prepended Ethernet header, and the operation of **snoop** in general, have the following properties:

- If the packet was sent from the ATM interface, the least significant 24 bits of the Ethernet source address are the VPI/VCI on which the packet was sent. The Ethernet destination address will be zero.
- If the packet was received from the ATM interface, the least significant 24 bits of the Ethernet destination address are the VPI/VCI on which the packet was received. The Ethernet source address will be zero.
- IP packets will be delivered with the Ethertype field set to **ETHERTYPE_IP**. ARP requests and replies will be delivered with the Ethertype field set to **ETHERTYPE_ARP**.
- Two new Ethertypes are defined (in **include/fore_atm_user.h**) for SPANS signalling messages and packets using the FORE API. SPANS messages will be delivered with Ethertype **ETHERTYPE_SPANS** (0xfa00), while FORE API packets will be delivered with Ethertype **ETHERTYPE_FOREAPI** (0xfa01).
- **snoop** currently fails to decode the IP addresses properly from ATM ARP messages in summary mode. The correct message is delivered, however, and can be seen with the **-x** option.
- Since **snoop** expects to be operating with an Ethernet interface rather than an ATM interface, it will exit if it receives a packet larger than the Ethernet MTU (this may occur since the ATM MTU may be up to 65535 bytes). To avoid this problem, use the **-s** option with a value of 1500 to limit the packet size delivered to **snoop**.

9.5 AAL NULL Support

All FORE API connections can be segmented and reassembled using no AAL. The AAL null software implements a procedure known as header coalescing. All cells received on an AAL null connection with identical headers will be grouped together into batches. These batches of cells are then delivered to the application as a group. The maximum number of cells in a group can be controlled though **`atm_setbatchsize`**(4n) (the default is one cell).

The net effect is that cells received on an AAL null connection will be buffered in the driver until either a cell arrives on that same connection with a different header, or the number of cells buffered equals the current batch size. AAL null cells are received by an application through **`atm_recv_null`**(4n), with the most significant four bytes of the ATM header (the header excluding the HEC) returned in the last argument. See **`atm_recv_null`**(4n) for more information.

CHAPTER 10 Troubleshooting

The troubleshooting tests detailed in this chapter will clearly indicate and identify the most common problems in establishing ATM networks. Therefore, before calling FORE Systems Technical Support, perform these tests to correct or at least pinpoint the problem.

If you need to call Technical Support, please have the results of these tests ready, in addition to the information requested in Section 10.4, when reporting your problem.

10.1 Adapter Hardware Troubleshooting

The flowchart in Figure 10.1 illustrates the tests used to check the basic hardware functionality of a FORE Systems adapter, with the adapter card isolated from the network. The tools used to perform the tests are provided by FORE Systems and the computer hardware vendor. Each of the tests, indicated by the diamond-shaped blocks in Figure 10.1, is described individually in the following subsections.

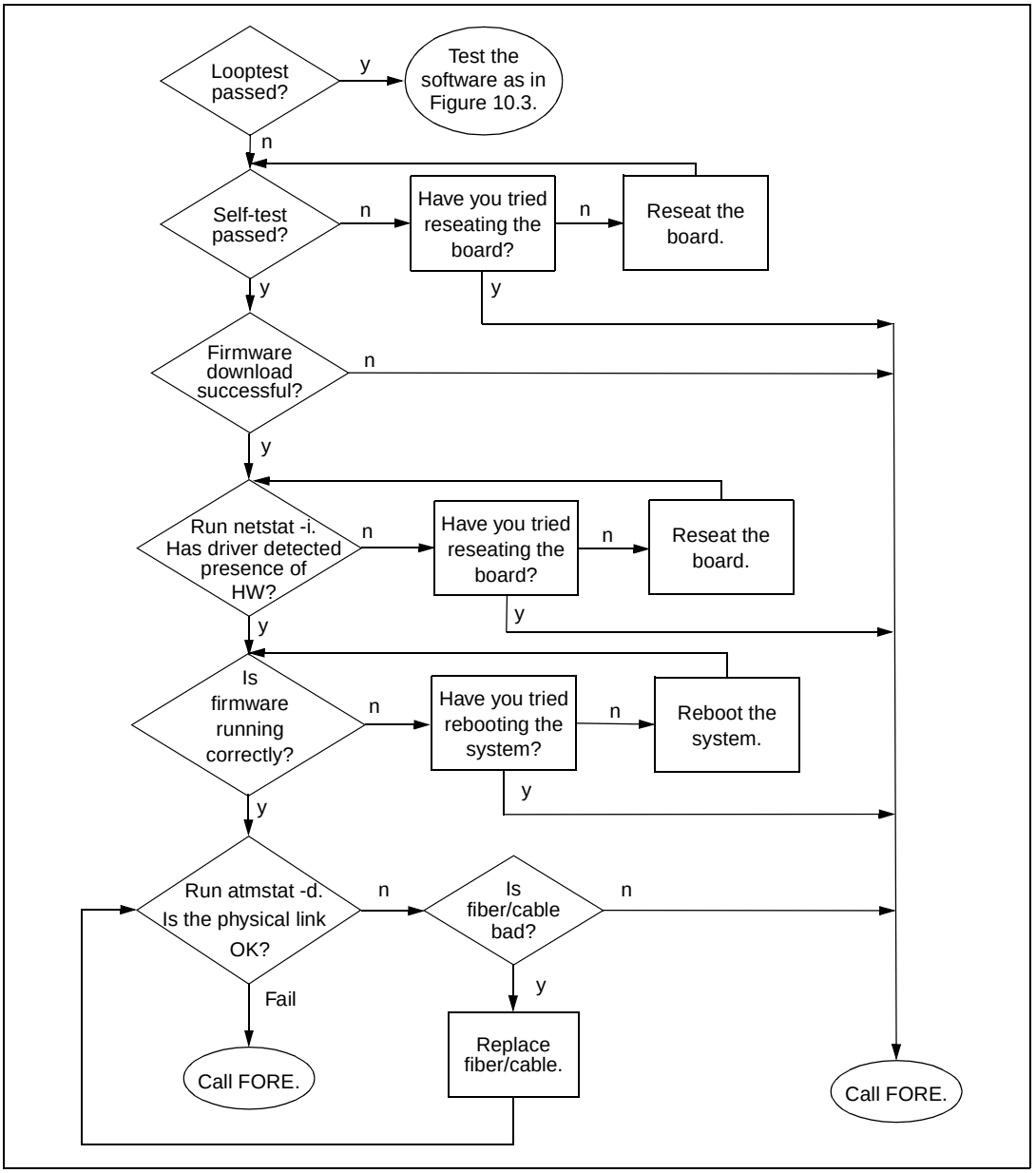

Figure 10.1 - Adapter Hardware Troubleshooting Flowchart

10.1.1 Run Looptest

To determine if an interface is functioning properly, run the looptest utility on a host that has been disconnected and isolated from the network.

NOTE

Before running **looptest**, you must couple the Receive and Transmit connectors on the backplate of the card to each other using a short loop of fiber-optic cable, or a UTP connector wired for loopback, as applicable to your adapter. This cable should remain on throughout this test.

The looptest utility uses FORE Systems' ATM user-level Application Programming Interface. For proper operation, **looptest** requires read/write access to the ATM device. To run **looptest**, enter the following command at the system prompt in the working directory:

```
looptest fa0
```

where **fa0** is the default device name for a single ATM adapter.

The **looptest** utility verifies that the board of an adapter is operating correctly. Correct operation means that all of the following conditions are true:

1. The self-test has been passed successfully.
2. The firmware has been downloaded successfully.
3. The driver has detected the existence of the hardware.
4. The firmware is running.
5. The physical link is up.

If **looptest** passes, then the board hardware of the adapter is OK. The next step is to test the software as shown in Figure 10.3.

If **looptest** fails, the point of failure will be indicated by messages generated for each of the five items above. Refer to the following subsections for instructions about testing the individual items.

10.1.2 Check Self-Test (Automatically Performed)

During a system boot, the ATM adapter automatically performs a self-test of the hardware, running a low-level diagnostic which checks memory read / write capability. Upon completion of the self-test, a message is printed to the console of the workstation indicating whether or not the hardware failed.

If the self-test is successful, proceed to the instructions regarding the firmware download as described in the next subsection.

If the self-test fails, reseat the board by performing the following steps to ensure that failure was not due to improper insertion of the board:

1. Halt the system, being sure to follow the procedures outlined in Chapter 2 of the User's Manual for the adapter.
2. Open the computer as shown in Chapter 2 of the User's Manual for the adapter, and reseat the board.
3. Reboot the system.

If the board still fails after a reseat, then it should be returned for repair. Call FORE Systems' Technical Support for further assistance.

10.1.3 Firmware Download (Automatically Performed)

Before operating as an ATM interface, the firmware is automatically downloaded from the system RAM to the onboard i960 processor during host system boot. A message similar to: "XXX-200 initializing..." is displayed on the console, indicating that the board is being initialized. When the initialization is complete, success is indicated with the message "done" and failure is indicated with the message "failed".

If the download is successful, check to see if the hardware has been detected by the driver as described in the next subsection.

If the firmware failed to download, then there is most likely a hardware problem. Call FORE Systems' Technical Support for further assistance.

10.1.4 Hardware Detected by Driver

To determine if the driver software on the host has detected the presence of an ATM adapter board, issue the following command once the host system has come up completely:

```
netstat -i
```

If the driver has located the ATM board, the screen output shows **fa0** (or the interface name supplied during installation) in response to the **netstat** command. If there is more than one adapter card, the next board will be named **fa1**, and so on. If you have configured a Classical IP interface, this will also be shown. The option **-i** shows the state of interfaces that were auto-configured, as happens when the FORE software is loaded and run upon system boot. Interfaces statically configured in a system, but not located at boot time, are not shown.

If the driver does not see the ATM board, no response will be given. Reseat the board by performing the following steps to ensure that failure was not due to improper insertion of the board:

1. Halt the system, being sure to follow the procedures outlined in Chapter 2 of the User's Manual for the adapter.
2. Open the computer as shown in Chapter 2 of the User's Manual for the adapter, and reseat the board.
3. Reboot the system.

If the board still fails after a reseat, then it should be returned for repair. Call FORE Systems' Technical Support for further assistance.

10.1.5 Check Firmware

To check whether or not the firmware is running correctly, issue the following command:

`atmstat fa0 1`

In this command, the last parameter “1” causes the command to be repeated at one-second intervals.

If the firmware is running correctly, the response will show Input, Output, and Error Statistics for the adapter in the following format:

```
PHY/ATM/AAL statistics:
Output                Input                        Errors
  ATM      AAL*        ATM      AAL*    4B5B    4B5B     ATM    AAL*    AAL*
 Cells   CS-PDUs      Cells   CS-PDUs Framing Hdr-CRC VPI/VCI Pay-CRC   Proto
161747    153692     142289    134685       0       0      20       0       0
```

If the firmware is not running correctly, **`atmstat`** hangs, and nothing is returned, indicating either a problem with the firmware, a problem with the board, or a severe software failure. Run the following command several (at least three) times:

`tmconfig -dro 4d70 /dev/fa0`

Check the first word at address 4d70. This value should change each time the above command is run. If the value does not change, call FORE Systems Technical Support for further assistance.

If the input shows zeros for all possible values, check the carrier state per the instructions in Section 10.1.6.

If the output shows zeros for all possible values, the firmware may not have been initialized. Make sure that installation occurred without problems and re-install if needed, and then reboot the system. If there is still a problem, call FORE Systems’ Technical Support for further assistance.

10.1.6 Check Physical Link

To see the carrier state of the board, issue the following command:

atmstat -d fa0

The **-d** option displays device statistics in the following format:

```
Device statistics:
      Buffer Allocation Failures
        Type 1           Type 2
    Small    Large    Small    Large    Receive Queue Full    Carrier
       0        0        0        0                     0         ON
```

If **ON** is displayed in the Carrier field, then the physical link is fine.

If the board does not see a carrier (**OFF** is displayed in the Carrier field), then there is either a problem with the loopback fiber or there is a hardware problem with the optical drivers on the board. Check the fiber. If the fiber is bad, replace the fiber and run **looptest** again. If the fiber is not bad, then call FORE Systems' Technical Support for further assistance.

Alternatively, if you have access to the back of the host and can see the LED displays on the adapter backplate, a red LED on the R (Receive port) also indicates carrier failure.

10.2 Testing Network Connectivity Using PVCs

The network connectivity tests require that two ATM adapters are connected to an ATM switch with PVCs (as shown in Figure 10.2). The carrier lights should be unlit on the boards and on the switch, indicating that the fibers are OK.

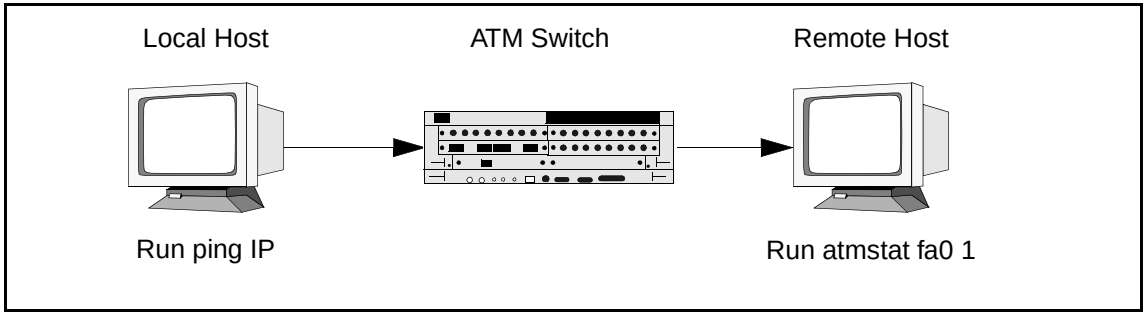

Figure 10.2 - Hardware Configuration for Checking PVCs

The network connectivity test suite, shown in Figure 10.3, examines higher level functionality after basic adapter board performance has been verified by passing all the tests and checks shown in Figure 10.1.

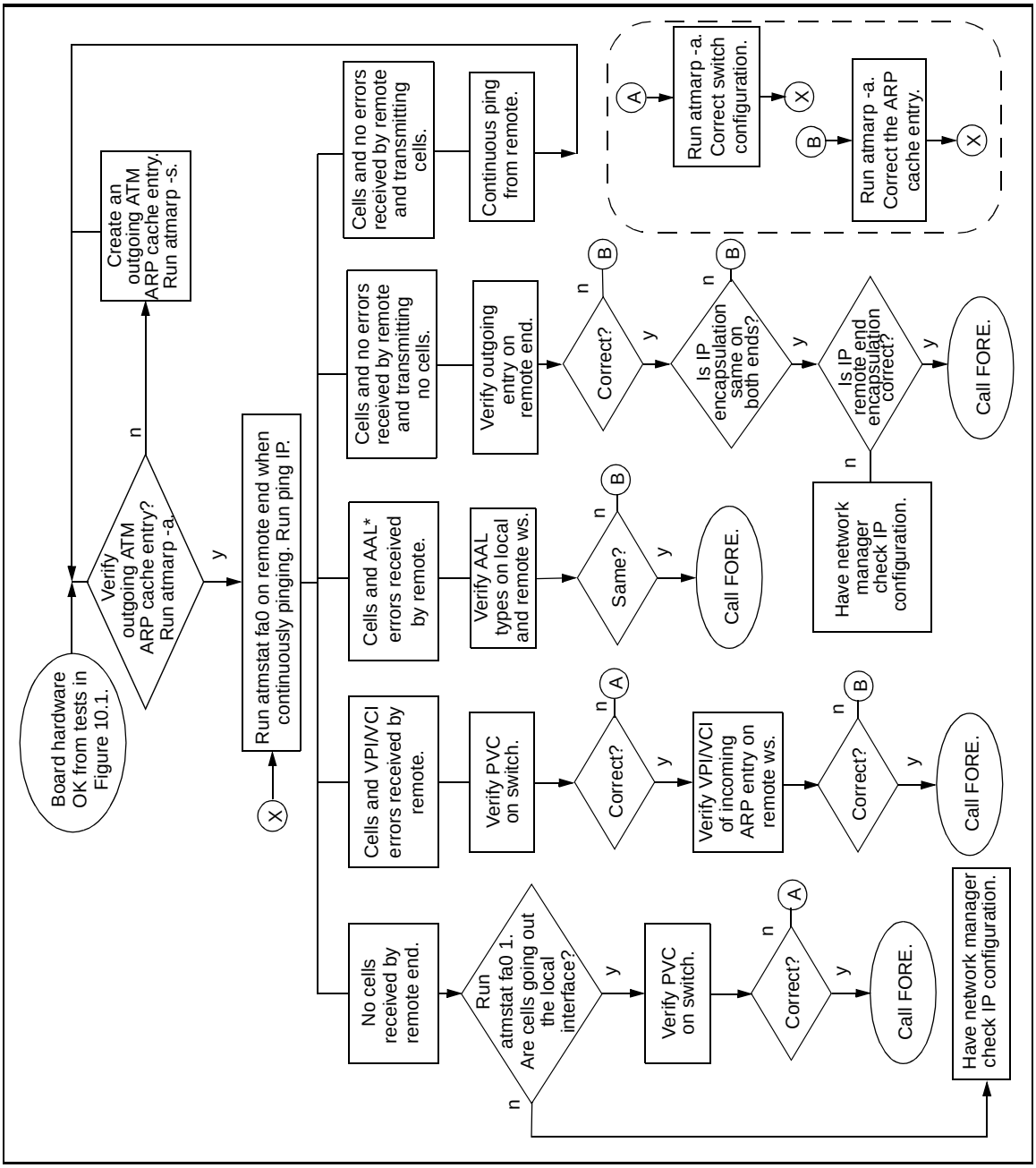

Figure 10.3 - Networking Connectivity Using PVCs

This test sequence requires that the switch be configured with a valid PVC and the end stations have the proper IP configuration and ATM ARP cache entries. See the atmarp man page and Chapter 4 of the *ForeRunner* ATM Switch manual to determine if the PVCs are correctly configured. The tests in Figure 10.3 assume that a **ping** was tried and there was no response (**ping** failed).

The tests in Figure 10.3 also require that if a switch is used, it is a FORE Systems switch on which SPANS has been disabled on both the ports of the switch and the ATM endstations. SPANS must be disabled because it automatically creates ATM connections, which may alter the test results.

All of the test conditions are checked by running a continuous **ping** with the following command:

```
ping <IP_address_of_remote_workstation>
```

10.2.1 Verifying the Outgoing ATM ARP Entry

To verify the outgoing ATM ARP cache entry for the endstation originating the ping, enter the following command on the host:

atmarp -a

The following is an example of a typical ATM ARP cache display:

```
Outgoing connections:
fa0: ws2-atm (198.29.21.74): vpi.vci=0.100 aal=5
        switch.port=-.-
        flags=(PVC) encapsulation=NULL peak rate=(unlimited)
fa0: ws3-atm (198.29.21.94): vpi.vci=0.200 aal=5
        switch.port=-.-
        flags=(PVC) encapsulation=NULL peak rate=(unlimited)
Incoming connections:
fa0: switch.port=-.- vpi.vci=0.100 aal=5 flags=(PVC) decapsulation=NULL
fa0: switch.port=-.- vpi.vci=0.200 aal=5 flags=(PVC) decapsulation=NULL
```

Make sure the ARP cache entry does indeed match the IP address of the remote endstation and is using the PVC configured on the switch.

If the prompt is returned with no information displayed, this indicates that the ATM ARP cache is empty.

Use the following two commands to create a PVC on the host:

atmarp -s *<hostname> <device> <vpi> <vci> <aal>*

atmarp -l *<device> <vpi> <vci> <aal>*

If the ATM ARP cache entry is valid, then perform the instructions in the next subsection for **atmstat**.

10.2.2 atmstat

To determine a particular failure state, enter the following command on the remote workstation while continuously pinging:

atmstat fa0 1

```
PHY/ATM/AAL statistics:
      Output                Input                        Errors
    ATM     AAL*        ATM     AAL*    4B5B    4B5B     ATM    AAL*    AAL*
  Cells  CS-PDUs      Cells  CS-PDUs Framing Hdr-CRC VPI/VCI Pay-CRC   Proto
 161747   153692     142289   134685       0       0      20       0       0
```

The failure states are determined by examining the output from the **atmstat fa0 1** command string. The failures are classified by whether or not cells are sent (or received) and whether or not errors are received. The output shown above is typical of the first response from the **atmstat fa0 1** command string. Succeeding lines of data continue in the same column format. Refer to the following subsections for a description of each type of failure.

10.2.2.1 No Cells Received by Remote End

If no cells are received by the remote end (the Input ATM Cells field displays zero), then run the following command on the local machine to verify that cells are going out the ATM interface:

atmstat fa0 1

If there are no cells going out (the ATM Output Cells field shows zero), then there is most likely a problem on the local machine rather than the remote host or the network. Please have your network administrator check the IP configuration.

If cells are going out (the ATM Output Cells field shows a value other than zero), then the PVC on the switch may be configured incorrectly. Check the PVC configuration. If it is not set up properly, then correct the PVC and rerun the test. If the PVC is configured correctly and the error persists, call FORE Systems' Technical Support for further assistance.

10.2.2.2 Cells and VPI/VCI Errors Received by Remote

If the remote workstation is receiving cells and is receiving VPI/VCI errors, then this indicates that cells are coming into the workstation, but are on a VPI/VCI that may not be configured correctly.

Check the PVC configuration. If it is not set up properly, then correct the PVC and rerun the test. If the PVC is configured correctly and the error persists, then the incoming ARP entry on the remote workstation is most likely the problem. List the ATM ARP cache using **`atmarp -a`** and check the incoming ARP entry for that connection.

If the incoming ARP entry is not configured properly, then correct the configuration and rerun the test. If the incoming ARP entry is configured properly and the error persists, then call FORE Systems' Technical Support for further assistance.

10.2.2.3 Cells and AAL* Errors Received by Remote

If the remote workstation is receiving cells and AAL* errors, then the AAL types of the outgoing entry on the local workstation and the incoming entry on the remote workstation probably do not match. Check both ATM AAL types using **`atmarp`** to see if they match. If they are different, set the AAL parameter to the same type and rerun the test. If they match and the error persists, then call FORE Systems' Technical Support for further assistance.

10.2.2.4 Cells and No Errors Received by Remote and Transmitting No Cells

If the remote workstation is receiving cells with no errors, but is not transmitting any cells, then either the outgoing IP address on the remote end is incorrect or the IP encapsulation does not match on both ends. (A Classical IP PVC uses LLC/SNAP encapsulation while a FORE IP PVC uses AAL5 based Multiplexing (NULL) encapsulation.)

First, check the outgoing IP address on the remote end using **`atmarp -a`**. If it is not configured properly, then correct the configuration and rerun the test. If the outgoing ARP entry is configured properly, then check to see if the IP encapsulation matches on both ends using **`atmarp -a`**.

If the IP encapsulation does not match on both ends, then correct the configuration and rerun the test. If the IP encapsulation matches on both ends and the error persists, then there may be an IP routing problem on the remote host.

The network administrator should verify the IP routing. If there is still a problem, then call FORE Systems' Technical Support for further assistance.

10.2.2.5 Cells and No Errors Received by Remote and Transmitting Cells

If the remote end is receiving cells with no errors and is transmitting cells in response, then the remote end is OK. Looking at Figure 10.2, reverse the direction. From the remote host, start a continuous **`ping`** and then run these same tests starting again with Section 10.2.1. Watch the results of these tests on the local host.

10.3 LAN Emulation Troubleshooting

The following procedures provide a top-down series of troubleshooting procedures for LAN emulation from the point of view of the host in which your adapter resides. Troubleshooting procedures for the host system, as well as for equipment to which your adapter may be connected, are referenced as necessary. If you have any questions about troubleshooting LAN emulation as employed with this adapter, contact FORE Systems' Technical Support.

10.3.1 Troubleshooting Procedures

If your host system is unable to communicate with other members of the ELAN, review the following questions and procedures for possible solutions.

Before You Begin

Before attempting to troubleshoot suspected LAN emulation problems, perform the following:

- Ensure that the host hardware (switches, workstations, adapters, etc.) that is running the various LAN emulation software processes (LECS, LES, BUS, LEC) is correctly connected, powered up, and functional.
- Perform the appropriate hardware troubleshooting.

NOTE

Section 10.1 of this manual provides adapter hardware troubleshooting procedures. Refer to the documentation supplied with your host system, as well as any hardware involved in running LAN emulation processes, for appropriate hardware troubleshooting.

- Obtain the appropriate network parameters from your system administrator that define how your host should be configured for the ELAN that you are troubleshooting. This information should include:
  - the ELAN name
  - the name assigned to your interface
  - the IP address assigned to your interface
  - the ATM address of the system on which the ELAN's services is running

Is the ELAN state "Operational?"

How to check -

Enter the command **`elconfig show -configured`** and check if the ELAN state is "Operational." Also note the "Last Error" from the output.

Possible Solutions -

If the state is "Suspended":

1. Ensure that the interface is assigned the correct IP address and is UP.

If the state is "Operational":

1. Check routing entries. Make sure that the Destination and Gateway addresses are correct. Make sure that the default route is correct (i.e., default Gateway address is correct). Please refer to Chapter 4 of this manual for IP interface configuration.
2. Follow IP troubleshooting procedures supplied with your system OS network troubleshooting guide.
3. Call FORE Technical Support.

If the state is **NOT** "Operational" or "Suspended," proceed to the next question.

Is the ATM address assigned?

How to check -

Enter the command **`atmarp -z qaa0`** and check if the ATM address is assigned.

Possible Solutions -

If the ATM address is **NOT** assigned.

1. Ensure that FORE **`snmpd`** or **`ilmid`** is running. (Check the syslog file to see if ILMI has registered the ATM address with the switch)
   - If not running, reinstall the software OR call FORE Technical Support.
2. Enter the command **`atmstat fa0`** and observe the response.
   - If **`atmstat`** does not respond, call FORE Technical Support.
   - If atmstat responds with cell counts, **and** if you are using a non-FORE switch, make sure that the switch's address registration is working properly.

     If you are using a FORE switch, call FORE Technical Support.

If the ATM address **is** assigned, proceed to the next question.

What is the "Last Error" appearing in the output of the `elconfig show -configured` command?

How to check -

Enter the **`elconfig show -configured`** command and note the last error message in the output.

Possible Solutions -

Last error messages and corrective actions are mentioned with each case below.

- *LES address is zero (only in autoconfig mode) or VCI not assigned for LES (only in manual configuration).*

1. "**LECS failed to find ELAN**"

   Ensure that the ELAN name is correct and is registered with the LECS (in case of auto-configuration only).

2. "**LECS failed to respond**"

   If in auto-configuration mode, make sure that the LECS is started and is running.

3. "**failed to connect to LES**" or
   "**Could not connect to the BUS**"

   Make sure that the services (LES,BUS) are up, and that the services machine is connected to the switch. Make sure that the ATM address of the services machine is correct in the LECS database.

4. If services are UP, check the syslog file (if enabled) for any ERROR conditions and make corrections as appropriate. If services are UP but **`syslog`** is not enabled, call FORE Technical Support.
5. Enter the command **`atmstat fa0 1`** and observe the response.
   a. If **`atmstat`** does not respond, call FORE Technical Support.

b. If **`atmstat`** responds, check if you can troubleshoot the switch. Otherwise, call FORE Technical Support.

- *LES address is assigned (in auto-configuration mode only)* ***and*** *BUS address is not assigned*

1. "**LE_ARP for BUS failed**" or
   "**BUS connection dropped**" or
   "**LES connection dropped**"

   Check for 'direct vpi.vci' to LES in the **`elconfig`** output. Make sure that the LES is running if vpi.vci is not assigned.

   Check the LES log (if enabled) and contact FORE Technical Support for any ERROR conditions.

- *All addresses are assigned but VCIs are not assigned.*

1. "**LES connection dropped**" or
   "**BUS connection dropped**"

   Make sure that the services are running.

2. Enter the command **`atmstat fa0 1`** and observe the response.

a. If **`atmstat`** does not respond, call FORE Technical Support.

b. If **`atmstat`** responds, troubleshoot the switch. Otherwise, call FORE Technical Support.

10.4 Collecting Additional Information

Once basic adapter installation and network connectivity have been tested, this section explains how to obtain all of the additional information that you need to have ready before calling FORE Systems' Technical Support. This information should exist either on-line (by redirecting the output to a file) or in hard copy form.

10.4.1 Basic Information

The following basic network information is very useful in helping FORE's Technical Support staff troubleshoot your problem:

1. Host platform configuration:
   - Vendor name
   - Platform type
   - RAM (MB)
   - Disk drive size (approximate)
2. Patches installed (very important for SunOS and Solaris)
3. Network topology (physical configuration)
   - Sketch and FAX in, if possible

Please have your support contract ID number and serial number ready also.

10.4.2 Adapter Information

On the host, at a command line, type the following six commands and note the responses:

- **`uname -a`** (Shows operating system, and platform names and versions)
- **`ifconfig fa0`** (Shows adapter interface configuration)
- **`netstat -nr`** (Shows routing table with destinations, gateways, and flags)
- **`netstat -in`** (Shows device names and addresses, and usage information)
- **`adinfo fa0`** (Shows adapter device name and version information)
- **`atmstat -d fa0`** (Shows carrier state and a variety of error counters)

Typical responses are shown under each command. The responses from these commands enable support to gather sufficient information to resolve the majority of problems.

NOTE

The assumed adapter name in the examples is **fa0**. On your particular system, the adapter may have a different designation. To check the name of your adapter, use the command: **netstat -in**.

uname -a

```
SunOS marlin 4.1.3_U1 2 sun4m
```

ifconfig fa0

```
fa0: flags=863<UP,BROADCAST,NOTRAILERS,RUNNING,MULTICAST>
        inet 198.29.38.206 netmask 0xffffff00 broadcast 198.29.38.255
```

netstat -nr

```
Routing tables
Destination          Gateway              Flags    Refcnt Use        Interface
127.0.0.1            127.0.0.1            UH       3      2264661    lo0
198.29.24.0          198.29.16.74         UG       1      9751       fa0
default              192.88.243.19        UG       3      123714     ie0
198.29.16.0          198.29.16.54         U        29     10892307   fa0
204.95.89.0          198.29.16.28         UG       0      2080       fa0
198.29.25.0          192.88.243.19        UG       0      0          ie0
198.29.26.0          192.88.243.19        UG       0      2696       ie0
198.29.27.0          192.88.243.19        UG       0      7853       ie0
198.29.19.0          198.29.16.85         UG       0      0          fa0
192.88.243.0         192.88.243.54        U        350    9188789    ie0
204.120.44.0         192.88.243.19        UG       1      1677       ie0
198.29.28.0          198.29.16.8          UG       0      87706      fa0
198.29.29.0          198.29.16.2          UG       0      0          fa0
198.29.31.0          198.29.16.75         UG       5      16417      fa0
198.29.23.0          192.88.243.53        UG       6      122731     ie0
```

netstat -in

```
Name Mtu   Network     Address            Ipkts Ierrs    Opkts Oerrs  Coll
ec0  1500  192.88.243  192.88.243.171   1173050 39926   509363     0 107115
fa0  9188  198.29.38   198.29.38.206          0     0        0     0     0
qaa0 9180  198.29.22   198.29.22.206          0     0        0     0     0
qaa1*9180  none        none                   0     0        0     0     0
qaa2*9180  none        none                   0     0        0     0     0
qaa3*9180  none        none                   0     0        0     0     0
lo0  8304  127         127.0.0.1          32048     0    32048     0     0
```

adinfo fa0

```
FORE Systems Release: ForeThought_ 4.1
fa0: sba-200e media=4b5b-100 hw=1.0.0 fw=2.3.0 serial=2 slot=0
```

atmstat -d fa0

```
Device statistics:
      Buffer Allocation Failures
        Type 1           Type 2
    Small    Large    Small    Large    Receive Queue Full    Carrier
        0        0        0        0                     0         ON
```

10.4.3 Switch Information

On the host, at a command line, type the following commands and note the responses:

- **`atmstat fa0`** command
- **`ifconfig -a`** command
- **`asxmon`** command
- **`cport`** command

On the switch, log in to the ATM Management Interface (AMI) to check the following:

- **`configuration spans show`**
- **`configuration port show`**
- **`configuration uni30 show`**
- Configuration of Network Modules (TAXI, DS-3, DS-1, OC-3c, E-3, and / or J-2)

Typical responses are shown under each command. The responses from these commands enables support to gather sufficient information to resolve the majority of problems.

`atmstat fa0`

```
PHY/ATM/AAL statistics:
     Output                Input                        Errors
   ATM      AAL*         ATM      AAL*    4B5B    4B5B     ATM    AAL*    AAL*
 Cells   CS-PDUs       Cells   CS-PDUs Framing Hdr-CRC VPI/VCI Pay-CRC   Proto
476058    469354      276580    273789       0       0       0       0       0
```

`ifconfig -a`

```
ie0: flags=63<UP,BROADCAST,NOTRAILERS,RUNNING>
        inet 192.88.243.29 netmask ffffff00 broadcast 192.88.243.0
        ether 0:80:42:40:9:2e
asx0: flags=63<UP,BROADCAST,NOTRAILERS,RUNNING>
        inet 198.29.16.29 netmask ffffff00 broadcast 198.29.16.0
        ether 0:0:0:0:0:0
lo0: flags=49<UP,LOOPBACK,RUNNING>
        inet 127.0.0.1 netmask ff000000
```

`asxmon` *`<switch_name>`*

```
ASX-200 switch up 3:35, 17 ports (9 active), software 2.3.5, hardware 1.1
port name            uptime VPs/max VCs/max    Kb/s    free     max   total Mb
 B1  198.29.22.34      2:57   1/1     5/5         0       0  140000        847
 B2  198.29.22.18      3:35   1/1     3/3         0       0  140000        141
```

```
C1  198.29.22.27      3:35   1/1     4/4         0       0  140000      83035
C2  198.29.22.3       3:35   1/1     4/4         0       0  140000         11
D1  198.29.22.2       3:35   1/1     2/2         0       0  100000         11
D2  198.29.22.11      3:35   1/1     3/3         0       0  100000         11
CTL 198.29.22.37      3:35   1/1    36/36        0       0   80000        203
```

NOTE

In the output above, the **Kb/s** and **free** columns do not contain valid data.

cport *<switch_name>*

```
Input                     Output
Port Type Mb/s State Time       VPs  VCs   BW     Cells  VPs  VCs   BW     Cells
 B1  user  100 down  19:08:15     1    2  100         0    1    2  100    137783
 B2  user  100 down  19:08:15     1    2  100         0    1    2  100    137784
 B3  user  100 up    19:08:15     1    3  100    141332    1    4  100    149078
 B4  user  100 down  19:08:15     1    2  100         0    1    2  100    137784
 C1  user  140 up    19:08:15     1    4  140    140569    1    3  140    148928
 C2  net   140 up    02:44:38     1    7  140    1046 M    1    6  140    193732
 C3  net   140 up    19:08:15     1    5  140    1297 M    1    6  140    455400
 C4  user  140 up    19:06:57     1    5  140    138800    1    5  140    1046 M
 CTL user   80 up    19:08:13     1   22   80       1 M    1   22   80       1 M
```

The following commands are run by logging in to the AMI on the switch. The next three commands show switch configuration and status.

configuration spans show

Port	VPI	State	Type	CDVT	Action	RemoteAddress
1C1	0	down	uni	250	tag	
1C2	0	down	uni	250	tag	
1C3	0	down	uni	250	tag	
1C4	0	up	uni	250	tag	169.144.60.108
1D1	0	down	uni	250	tag	
1D2	0	down	uni	250	tag	
1D3	0	down	uni	250	tag	
1D4	0	down	uni	250	tag	
1CTL	0	up	uni	0	tag	10.10.10.48

configuration spans show advanced

Port	VPI	SigVCI	CLSVCI	AAL	MinVCI	MaxVCI	SigBW	CLSUPC
1C1	0	15	14	4	32	511	0	0
1C2	0	15	14	4	32	511	0	0
1C3	0	15	14	4	32	511	0	0
1C4	0	15	14	4	32	511	0	0
1D1	0	15	14	4	32	511	0	0
1D2	0	15	14	4	32	511	0	0
1D3	0	15	14	4	32	511	0	0
1D4	0	15	14	4	32	511	0	0
1CTL	0	15	14	4	32	511	0	0

configuration port show

Port	Carrier	Mb/s	iVPs	iVCs	iBW	oVPs	oVCs	oBw	Model
1C1	no	155.0	1	4	155.0	1	4	155.0	OC3
1C2	no	155.0	1	4	155.0	1	4	155.0	OC3
1C3	no	155.0	1	4	155.0	1	4	155.0	OC3
1C4	yes	155.0	1	4	155.0	1	4	155.0	OC3
1D1	no	155.0	1	2	155.0	1	3	0.0	OC3
1D2	no	155.0	1	5	155.0	1	4	155.0	OC3
1D3	no	155.0	1	4	155.0	1	4	155.0	OC3
1D4	no	155.0	1	4	155.0	1	4	155.0	OC3
1CTL	yes	80.0	1	28	0.0	1	36	0.0	ASX

configuration port show advanced

Port	CDVT	Policing	VBROB	BuffOB
1C1	250	enabled	100	100
1C2	250	enabled	100	100
1C3	250	enabled	100	100
1C4	250	enabled	100	100
1D1	250	enabled	100	100
1D2	250	enabled	100	100
1D3	250	enabled	100	100
1D4	250	enabled	100	100
1CTL	5000	enabled	100	100

configuration uni30 show

Port	VPI	State	ILMI	UNIside	Type	OperType	RemoteAddress
1C1	0	down	down	network	auto	privateUNI	
1C2	0	down	down	network	auto	privateUNI	
1C3	0	down	down	network	auto	privateUNI	
1C4	0	down	up	network	auto	privateUNI	169.144.64.108
1D2	0	down	down	network	auto	privateUNI	
1D3	0	down	down	network	auto	privateUNI	
1D4	0	down	down	network	auto	privateUNI	
1CTL	0	up	down	network	auto	privateUNI	

configuration uni30 show advanced

Port	VPI	SigVCI	ILMIVCI	SigAAL	MinVCI	MaxVCI	SigBW	ILMIBW
1C1	0	5	16	5	32	511	0	0
1C2	0	5	16	5	32	511	0	0
1C3	0	5	16	5	32	511	0	0
1C4	0	5	16	5	32	511	0	0
1D2	0	5	16	5	32	511	0	0
1D3	0	5	16	5	32	511	0	0
1D4	0	5	16	5	32	511	0	0
1CTL	0	5	16	5	32	511	0	0

The following commands are run by logging in to the ATM Management Interface on the switch. Enter the following parameters at the prompt for the type of network modules that are installed on your switch:

configuration port taxi show

Port	Carrier	State	Obuf	Version	Loopback	Model
1A1	yes	up	8192	C	none	NM-C-TAXI-100-ST-128KB-6PT
1A2	no	down	8192	C	none	NM-C-TAXI-100-ST-128KB-6PT
1A3	no	down	8192	C	none	NM-C-TAXI-100-ST-128KB-6PT
1A4	no	down	8192	C	none	NM-C-TAXI-100-ST-128KB-6PT
1A5	no	down	8192	C	none	NM-C-TAXI-100-ST-128KB-6PT
1A6	yes	up	8192	C	none	NM-C-TAXI-100-ST-128KB-6PT

configuration port ds3 show

Port	Carrier	Status	Mode	Framing	Loopback	ClockSrc	Scrambling	IdleCells	Length
1A1	no	0x80	hcs	cbit	diag	internal	off	unassigned	Gt225
1A2	no	0x24	plcp	cbit	none	internal	off	unassigned	Gt225

configuration port ds1 show

Port	Carrier	Status	Mode	Framing	Loopback	ClockSource	LineLength	IdleCells
1C1	yes	0x1	plcp	ESF	none	internal	Lt110	unassigned
1C2	yes	0x1	plcp	ESF	none	internal	Lt110	unassigned
1C3	no	0x60	hcs	ESF	none	internal	Lt110	unassigned
1C4	no	0x60	hcs	ESF	none	internal	Lt110	unassigned
1C5	no	0x60	hcs	ESF	none	internal	Lt110	unassigned
1C6	no	0x60	hcs	ESF	none	internal	Lt110	unassigned

configuration port e1 show

Port	Carrier	Status	Mode	LineType	Loopback	ClockSource	LineLength	IdleCells
1D1	yes	0x100	hcs	CRC	none	internal	Lt110	idle
1D2	yes	0x100	hcs	CRC	none	internal	Lt110	idle

configuration port e3 show

Port	Carrier	Status	Mode	Loopback	ClockSource	Scrambling	IdleCells
1D1	no	0x72	hcs	none	internal	off	unassigned
1D2	no	0x72	hcs	none	internal	off	unassigned
1D3	no	0x88	hcs	none	internal	off	unassigned
1D4	no	0x88	hcs	none	internal	off	unassigned

configuration port sonet show

Port	Width	Carrier	Status	Line	Mode	Loopback	ClockSource	Scramb.	IdleCells
1A1	sts3c	no	0x2	SMM	sonet	none	internal	on	unassigned
1A2	sts3c	no	0x2	SMM	sonet	none	internal	on	unassigned
1A3	sts3c	yes	0x1	SMM	sonet	none	internal	on	unassigned
1A4	sts3c	no	0x2	SMM	sonet	none	internal	on	unassigned

configuration port tp25 show

Port	Carrier	Media	Loopback	RxTiming
1A1	no	UTP	none	Yes
1A2	no	UTP	none	Yes
1A3	no	UTP	none	Yes
1A4	no	UTP	none	Yes
1A5	no	UTP	none	Yes
1A6	no	UTP	none	Yes
1B1	yes	UTP	none	Yes
1B2	yes	UTP	none	Yes
1B3	no	UTP	none	Yes
1B4	yes	UTP	none	Yes
1B5	no	UTP	none	Yes
1B6	yes	UTP	none	Yes

configuration port j2 show

Port	LineLength	Loopback	ClockSource
1D1	short	none	internal
1D2	short	none	internal
1D3	short	none	internal
1D4	short	none	internal

APPENDIX A PMD LED Indicators

This appendix shows the location of and gives a description of the PMD module LED indicators.

A.1 LED Location

The figures below show the appearance of the face plate.

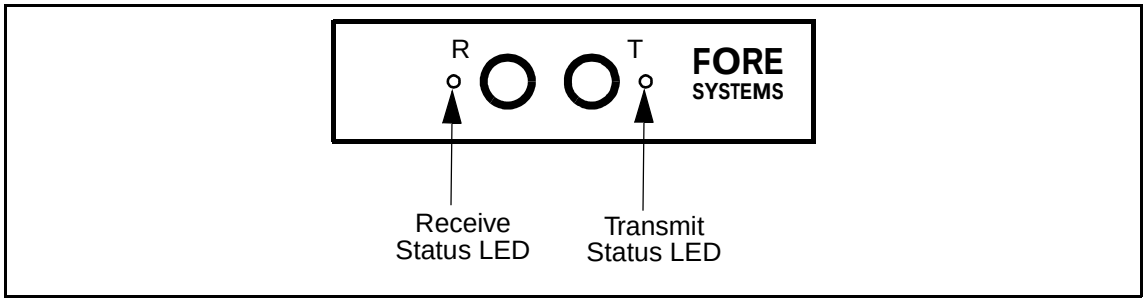

Figure A.1 - ST Connector Face Plate Configuration

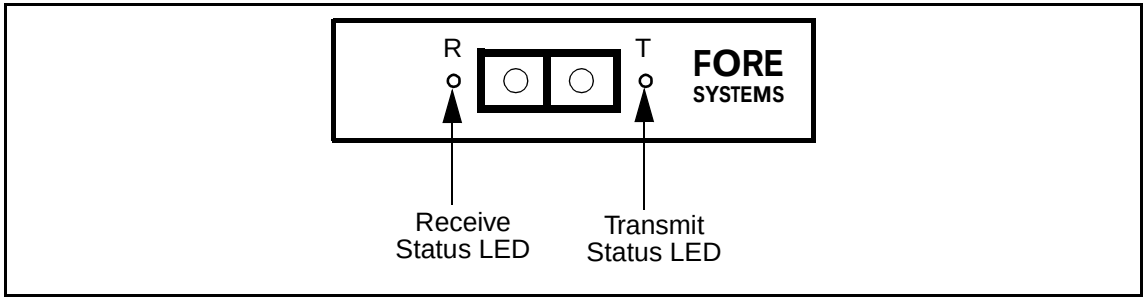

Figure A.2 - SC Connector Face Plate Configuration

A.2 LED Descriptions

The LEDs have the following meanings:

Table A.1 - Transmit LED

LED Color	Meaning
green	Transmitting data
off	Idle
yellow	SONET alarm condition declared (indicates trouble with the receiving device) (Applicable to OC-3 only)

Table A.2 - Receive LED

LED Color	Meaning
green	Receiving data
off	Idle
red	No carrier

APPENDIX B Diagnostics

The ATM Diagnostics program can display adapter information and can exercise the adapter's components to help distinguish between hardware problems and software problems. If the adapter does not function properly yet passes the low-level tests, then please check your FORE software installation or reinstall the software. Please note the following:

- The adapter must be disconnected from the network when you run the low-level tests.
- The workstation will be rebooted when you exit the diagnostics program if you run any of the low-level tests.

B.1 Features

The menu driven program provides:

- Information on the running state of the adapter
- Information about adapter hardware and software versions and media type
- An adapter test suite. These tests cause the ATM software to cease to function when they are are run.

B.1.1 Invoking the Program

The ATM diagnostics are contained in a program called **`atmdiag`** which is loaded during installation. The program uses the standard UNIX curses text library, so before the program is invoked, the TERM environment variable must be correctly set to the display terminal being used. The terminal window must have a minimum of 24 lines and 80 columns. The diagnostics program must also be run as the superuser.

NOTE

If any low-level tests are run, the workstation will reboot after exiting the diagnostics program to ensure that the ATM software is returned to a stable state.

The program is invoked as follows:

atmdiag *<ATM_device>*

where *<ATM_device>* is the device name of the adapter under test. A typical session may look like the following for the Bourne Shell:

```
# TERM=vt100; export TERM
# /usr/fore/etc/atmdiag /dev/fa0
```

When the program begins, users are presented with this menu:

```
Check Firmware Installation
Display Adapter Information
Display OC3 Registers
Display OC3 Statistics
Low-level Tests
Support Information
About Diagnostics
Exit
```

Details on each of the menu items are on the following pages.

The operation of each menu choice is explained below:

- **Check Firmware Installation** - This option allows the user to verify that the adapter is installed and correctly running the firmware. It simply checks that the firmware is running, and if it is not, prints the type of error that caused it to halt. If the software is not installed properly (for example, the firmware was never downloaded or downloaded incorrectly), the error is "Undefined Error".
- **Display Adapter Information** - This option displays information similar to the following:

```
ATM device       = /dev/fa0
Hardware Type    = SBA-200E (16)
Hardware Version = 3.20.0
Firmware Version = 3.0.0
Software Release = ForeThought_4.1.0 (1.47)
Media Type       = OC3 (6)
Slot             = 2
Serial Number    = 000132
Taxi Speed       = n.a.
Burst Class      = 2
OC3 Revision     = 48
```

- **`Display OC3 Registers`** - This option is only available on SONET adapters, and will display the registers of the OC3 device on the adapter. This information can be valuable to Technical Support to determine the state of the network interface.
- **`Display OC3 Statistics`** - (Available only on SONET adapters). This option provides a continual report of OC3 error counters on the adapter. The report is updated every second, and includes Section, Path, and Line BIP errors, Line and Path FEBE errors, and HCS errors. The user presses Control-C to return to the main menu.
- **`Low-level Tests`** - This option allows the user to test specific areas of the adapter through menu choices. The menu provides the following choices. Each menu item is explained in Section B.1.2:

```
Register Test/Reset Adapter
Slave Access Test
OC3 Interface Check
Network Tests (internal)
Network Tests (external)
Bus ASIC Test
Data Path Test
All of the above
** Return to Main Menu **
```

WARNING!

If any Low-Level tests are run, the workstation will reboot when the diagnostics program is exited.

- **`Support Information`** - This option displays the address of FORE Systems, Inc. and lists the phone number for Technical Support.
- **`About Diagnostics`** - This option displays general information about the diagnostics program.
- **`Exit`**. Exits the program.

B.1.2 Low-Level Tests

As each of these tests is run, the terminal displays a status message at various stages. If a test fails, a window appears with a brief description of the cause of the failure. For some of the tests, the window will display a four number code that can indicate to FORE Technical Support exactly where in the diagnostics firmware the failure occurred.

- **`Register Test/Reset Adapter`** - This test simply ensures that the adapter can be reset. If the registers are not accessible, the adapter will not be reset. When the test fails, it simply presents a window indicating the failure.
- **`Slave Access Test`** - This test verifies host accesses to the adapter, and runs a pattern test on the i960 RAM. On failure, the test will print the location and the data pattern that failed. On success, it displays a message indicating success.
- **`OC3 Interface Check`** - Only applicable to the SONET adapters, this test checks that the network interface is in a stable state. If the test passes or fails, a window will appear indicating such.
- **`Network Tests (internal)`** - Only applicable to SONET adapters, this test uses the hardware loopback mechanism of the network interface to verify that cells may be transmitted and received. The data does not exit the card, so this test may be run with no loopback media. A report is printed as the test progresses, and a window will appear indicating failure or success.
- **`Network Tests (fiber)`** - This test verifies that cells can be sent and received through loopback media. It is applicable to all adapters. A progress report is printed as the test progresses, and a window will appear indicating failure or success.
- **`Bus ASIC Test`** - This test verifies that the Bus ASIC is operational by verifying registers and sending data through the ASIC's hardware loopback. A window will appear indicating failure or success.
- **`Data Path Test`** - Verifies the functionality of the entire adapter causing multiple adapter functions to occur simultaneously. A report is printed as the test progresses, and a window will appear indicating failure or success.
- **`All of the above`** - This option sequentially performs each of the previous tests (where applicable). On error, a window appears with the firmware error code. Otherwise, a window appears to report success.
- **`Return to Main Menu`** - Return to the top level menu.

APPENDIX C LAN Emulation Services Console Messages

The LAN Emulation Services programs **lecs** and **le** generate both informational and error messages to the system log. The following sections provide a listing of the various messages for each of these programs.

C.1 Listing Conventions

The message listings on the following pages are presented in a format similar to the following example:

fore-lane-le-10001: le: too few args

DESCRIPTION: Insufficient arguments given to le

REMEDY: Correct command line

NOTE

The REMEDY field appears only for messages for which there is a suggested corrective action.

Only the line in **bold** type appears as output to the user. Using the above example, the system log output would appear thus:

```
fore-lane-le-10001: le: too few args
```

The format specifiers used in the console messages are:

%s character string

%c single character

%d decimal integer

%ld (long) decimal integer

%u unsigned decimal integer

%lu (long) unsigned decimal integer

%lx (long) unsigned hexadecimal integer

C.2 `le` Program Messages

NOTE

Messages are listed in numerical order.

fore-lane-le-10001: le: too few args

DESCRIPTION: Insufficient arguments given to le

REMEDY: Correct command line

fore-lane-le-10002: le: unknown token '%s' on cmd line at position %d

DESCRIPTION: Unrecognized arguments given to le

REMEDY: Correct command line

fore-lane-le-10003: le: %s: Bad argument

DESCRIPTION: Malformed argument given to le

REMEDY: Correct command line

fore-lane-le-10004: le: %s: Malformed SEL octet

DESCRIPTION: Malformed SEL octet given to le

REMEDY: Correct command line

fore-lane-le-10005: le: %s: Malformed ATM address

DESCRIPTION: Malformed ATM address given to le

REMEDY: Correct command line

fore-lane-le-10011: le: %s: Value out of range for SEL octet

DESCRIPTION: SEL octets must be in the range [0 ... 255]

REMEDY: Correct command line

fore-lane-le-10012: le: %s: Must specify 20-byte ATM address

DESCRIPTION: A full 20-byte ATM address must be given

REMEDY: Correct command line

fore-lane-le-10021: le: failed to create les

DESCRIPTION: The LES could not be created

REMEDY: Check host resource utilization or ATM initialization

fore-lane-le-10022: le: failed to create bus

DESCRIPTION: The BUS could not be created

REMEDY: Check host resource utilization or ATM initialization

fore-lane-le-10023: le: failed to create les or bus

DESCRIPTION: The LES or BUS could not be created

REMEDY: Check host resource utilization or ATM initialization

fore-lane-le-10024: le: sd_GetAddress() failed

DESCRIPTION: Failed to retrieve the local ATM address

REMEDY: Check the status of ILMI address registration

fore-lane-le-10101: les: Unexpected opcode %s

DESCRIPTION: The LES did not expect the given LE opcode

REMEDY: Report problem to your LEC vendor

fore-lane-le-10102: les: Control-Distribute failure to lec #%lu

DESCRIPTION: The LES could not add the LEC to the Control Distribute VCC

REMEDY: Check the network for signaling failures

fore-lane-le-10201: bus: Unexpected opcode %s

DESCRIPTION: The BUS did not expect the given LE opcode

REMEDY: Report problem to your LEC vendor

fore-lane-le-10202: bus: Multicast-Forward failure

DESCRIPTION: The BUS could not add an LEC to the Multicast Forward VCC

REMEDY: Check the network for signaling failures

fore-lane-le-20001: Starting LES/BUS servers

DESCRIPTION: The LES/BUS is commencing service

fore-lane-le-20002: LES for \"%s\" on %s

DESCRIPTION: The LES for the given ELAN is listening on the ATM address

fore-lane-le-20003: BUS for \"%s\" on %s

DESCRIPTION: The BUS for the given ELAN is listening on the ATM address

fore-lane-le-20004: le: sd_GetAddress() failed, sleeping

DESCRIPTION: Failed to retrieve the local ATM address

REMEDY: Check the status of ILMI address registration

fore-lane-le-20101: les: Received SETUP from %s

DESCRIPTION: The LES received a **SETUP** from the ATM address

fore-lane-le-20102: les: Received RELEASE from lec #%lu

DESCRIPTION: The LES received a **RELEASE** from the given LEC

fore-lane-le-20103: les: Received %s

DESCRIPTION: The LES received the LE opcode

fore-lane-le-20104: les: Received %s from lec #%lu

DESCRIPTION: The LES received the LE opcode from the given LEC

fore-lane-le-20111: les: Register(%s) for lec #%lu

DESCRIPTION: The LES has registered the MAC address for the given LEC

fore-lane-le-20112: les: Unregister(%s) for lec #%lu

DESCRIPTION: The LES has unregistered the MAC address for the given LEC

fore-lane-le-20121: les: LE_ARP(%s) => lec #%lu

DESCRIPTION: The **LE_ARP** has been resolved to the given LEC

fore-lane-le-20122: les: LE_ARP(%s) => bus

DESCRIPTION: The **LE_ARP** has been resolved to the BUS

fore-lane-le-20123: les: LE_ARP(%s) => proxies

DESCRIPTION: The **LE_ARP** has been forwarded to proxy clients

fore-lane-le-20124: les: LE_ARP(%s) => dropped

DESCRIPTION: The **LE_ARP** has been dropped

fore-lane-le-20201: bus: Received SETUP from %s

DESCRIPTION: The BUS received a **SETUP** from the ATM address

fore-lane-le-20202: bus: Received RELEASE from %s

DESCRIPTION: The BUS received a **RELEASE** from the ATM address

fore-lane-le-20203: bus: Received %s

DESCRIPTION: The BUS received the given LE opcode

C.3 `lecs` Program Messages

NOTE

Messages are listed in numerical order.

fore-lane-lecs-10000: No error

DESCRIPTION: Internal program error

REMEDY: Report problem to your vendor

fore-lane-lecs-10001: %s:%d: Unknown %s error: %d

DESCRIPTION: Internal program error

REMEDY: Report problem to your vendor

fore-lane-lecs-10002: Not enough memory

DESCRIPTION: There was not enough free memory to satisfy an allocation request

REMEDY: Reduce the system's memory load, or install more memory

fore-lane-lecs-10003: %s: ATM address syntax error

DESCRIPTION: An ATM address is malformed

REMEDY: Correct the value for the ATM address

fore-lane-lecs-10101: Invalid hash reference

DESCRIPTION: Internal program error

REMEDY: Report problem to your vendor

fore-lane-lecs-10102: Key value not in table

DESCRIPTION: Internal program error

REMEDY: Report problem to your vendor

fore-lane-lecs-10201: %s:%d: No such parameter

DESCRIPTION: Invalid parameter name used in configuration file

REMEDY: Use the correct parameter name

fore-lane-lecs-10202: %s:%d: Missing value

DESCRIPTION: A configuration-file parameter does not have a value

REMEDY: Add a value for the parameter

fore-lane-lecs-10203: %s:%d: Value out of range

DESCRIPTION: A configuration-file parameter value is outside the legal range

REMEDY: Correct the value for the parameter

fore-lane-lecs-10204: %s:%d: Malformed number

DESCRIPTION: A configuration-file numeric field contains non-numeric characters

REMEDY: Correct the value for the number

fore-lane-lecs-10205: %s:%d: ATM address syntax error

DESCRIPTION: A configuration-file ATM address is malformed

REMEDY: Correct the value for the ATM address

fore-lane-lecs-10206: %s:%d: MAC address syntax error

DESCRIPTION: A configuration-file MAC address is malformed

REMEDY: Correct the value for the MAC address

fore-lane-lecs-10207: %s:%d: Illegal LAN_Type value

DESCRIPTION: Illegal value for LAN_Type in configuration file

REMEDY: Correct the value for **`LAN_Type`**, which must be either **`Ethernet/IEEE 802.3`**' or **`IEEE 802.5`**'

fore-lane-lecs-10208: %s:%d: Illegal Multicast_Send type

DESCRIPTION: Illegal value for **`Multicast_Send_VCC_Type`** in configuration file

REMEDY: Correct the value for **`Multicast_Send_VCC_Type`**, which must be one of `Best Effort', `Variable', or `Constant'

fore-lane-lecs-10209: %s:%d: Missing ELAN name

DESCRIPTION: Missing ELAN name from **`Match.Ordering`** in configuration file

REMEDY: Correct the value for Match.Ordering

fore-lane-lecs-10210: %s:%d: Address/mask syntax error

DESCRIPTION: Illegal Accept/Reject form in configuration file

REMEDY: Correct the value for Accept/Reject

fore-lane-lecs-10301: LES address or config file required

DESCRIPTION: An LES address or configuration file name must be given in the LECS command line

REMEDY: Specify the correct command-line parameters

fore-lane-lecs-10302: %s: Cannot open for reading

DESCRIPTION: The configuration file cannot be read

REMEDY: Specify a readable configuration file name

fore-lane-lecs-10303: %s:%d: Line too long

DESCRIPTION: A line of the configuration file is too long

REMEDY: Shorten the line length

fore-lane-lecs-10304: %s:%d: Duplicate value

DESCRIPTION: A parameter in the configuration file has been specified multiple times

REMEDY: Remove the redundant parameter specification

fore-lane-lecs-10305: %s: Match.Ordering missing some ELANs

DESCRIPTION: The **`Match.Ordering`** directive does not include all ELANs with Accept rules

REMEDY: Correct the value for **`Match.Ordering`**

fore-lane-lecs-10401: Input packet too short for LE control frame

DESCRIPTION: The input packet is not long enough to constitute a valid LE control frame

REMEDY: Report problem to your LEC vendor

fore-lane-lecs-10402: Output packet too short for LE control frame

DESCRIPTION: Internal program error

REMEDY: Report problem to your vendor

fore-lane-lecs-10403: Not an LE control frame

DESCRIPTION: The input frame does not contain the **`LE_CONTROL`** marker

REMEDY: Report problem to your LEC vendor

fore-lane-lecs-10404: Not an LE configuration request frame

DESCRIPTION: The input frame does not contain the **`LE_CONFIGURE_REQUEST`** opcode

REMEDY: Report problem to your LEC vendor

fore-lane-lecs-10405: Unsupported protocol (%u)

DESCRIPTION: Unsupported LAN Emulation protocol

REMEDY: Report problem to your vendor

fore-lane-lecs-10406: Unsupported version (%u)

DESCRIPTION: Unsupported LAN Emulation protocol version

REMEDY: Report problem to your vendor

fore-lane-lecs-10407: Non-zero LECID (%u)

DESCRIPTION: Requester's **`LEC ID`** must be zero

REMEDY: Report problem to your LEC vendor

fore-lane-lecs-10408: Bad source-lan tag (%u)

DESCRIPTION: **`SOURCE-LAN-DESTINATION`** has illegal tag value

REMEDY: Report problem to your LEC vendor

fore-lane-lecs-10409: Bad LAN type (%u)

DESCRIPTION: **`LE_CONFIGURE_REQUEST`** frame has illegal **`LAN-TYPE`**

REMEDY: Report problem to your LEC vendor

fore-lane-lecs-10410: Bad maximum frame size (%u)

DESCRIPTION: **`LE_CONFIGURE_REQUEST`** frame has illegal **`MAXIMUM-FRAME-SIZE`**

REMEDY: Report problem to your LEC vendor

fore-lane-lecs-10411: LAN name size too big (%u)

DESCRIPTION: **`ELAN-NAME-SIZE`** value is too large

REMEDY: Report problem to your LEC vendor

fore-lane-lecs-10412: Bad length on ELAN-Index TLV (%u)

DESCRIPTION: The **`ELAN-Index TLV`** has an incorrect length

REMEDY: Report problem to your LEC vendor

fore-lane-lecs-10500: sd_CreateAPI() failed (%d)

DESCRIPTION: Unable to initialize signaling / data interface

REMEDY: Is the system configured for FORE LAN Emulation?

fore-lane-lecs-10501: sd_GetAddress() failed: %ld (%d)

DESCRIPTION: Unable to obtain local ATM address

REMEDY: Is the system configured for FORE LAN Emulation?

fore-lane-lecs-10502: sd_AddAddress() failed: %ld (%d)

DESCRIPTION: Unable to set local ATM address

REMEDY: Is the system configured for FORE LAN Emulation?

fore-lane-lecs-10503: sd_OpenPVC() failed: %ld (%d)

DESCRIPTION: Unable to open PVC

REMEDY: Is the PVC configured?

fore-lane-lecs-10504: sd_Listen() failed: %ld (%d)

DESCRIPTION: Unable to listen on ATM address

REMEDY: Report problem to your vendor

fore-lane-lecs-10505: sd_Connect() failed: %ld (%d)

DESCRIPTION: Unable to connect to peer

REMEDY: Check ATM connectivity

fore-lane-lecs-10506: sd_Send() failed: %ld (%d)

DESCRIPTION: Failed to send data to peer

REMEDY: Check ATM connectivity

fore-lane-lecs-10507: sd_Release() failed: %ld (%d)

DESCRIPTION: Failed to release connection to peer

REMEDY: Check ATM connectivity

fore-lane-lecs-10508: sd_CloseVCD() failed: %ld (%d)

DESCRIPTION: Failed to close ATM connection

REMEDY: Report problem to your vendor

fore-lane-lecs-10509: Failed to coalesce request buffer

DESCRIPTION: Unable to place request in contiguous buffer

REMEDY: Check that memory is not exhausted

fore-lane-lecs-10510: timeout() mismatch

DESCRIPTION: Internal program error

REMEDY: Report problem to your vendor

fore-lane-lecs-10511: conn_sched() failure

DESCRIPTION: Unable to schedule idle-release timeout

REMEDY: Report problem to your vendor

fore-lane-lecs-10512: conn_unsched() failure

DESCRIPTION: Unable to unschedule idle-release timeout

REMEDY: Report problem to your vendor

fore-lane-lecs-10513: atm_addr_t/nsap_t address size mismatch

DESCRIPTION: Internal program error

REMEDY: Report problem to your vendor

fore-lane-lecs-10514: atm_addr_t/calledp_addr.addr address size mismatch

DESCRIPTION: Internal program error

REMEDY: Report problem to your vendor

fore-lane-lecs-10515: Local address uninitialized, sleeping

DESCRIPTION: The local ATM address has not been set

REMEDY: Set the address (perhaps via ILMI)

fore-lane-lecs-10516: Address selector (0x%lx) out of range

DESCRIPTION: The SEL octet is outside the valid range

REMEDY: Specify a SEL octet in the range 0-255

fore-lane-lecs-10601: Internal error (bad default address)

DESCRIPTION: Internal program error

REMEDY: Report problem to your vendor

fore-lane-lecs-10602: Missing VPI in `\"%s\"`

DESCRIPTION: Syntax error in **`LECS.Permanent_Circuits`** value

REMEDY: Correct **`LECS.Permanent_Circuits`** in configuration file

fore-lane-lecs-10603: Missing VCI in `\"%s\"`

DESCRIPTION: Syntax error in **`LECS.Permanent_Circuits`** value

REMEDY: Correct **`LECS.Permanent_Circuits`** in configuration file

fore-lane-lecs-10604: Missing period in `\"%s\"`

DESCRIPTION: Syntax error in **`LECS.Permanent_Circuits`** value

REMEDY: Correct **`LECS.Permanent_Circuits`** in configuration file

fore-lane-lecs-10605: Missing comma in `\"%s\"`

DESCRIPTION: Syntax error in **`LECS.Permanent_Circuits`** value

REMEDY: Correct **`LECS.Permanent_Circuits`** in configuration file

fore-lane-lecs-10701: Illegal option -%c

DESCRIPTION: The option does not exist

REMEDY: Correct the command line

fore-lane-lecs-10702: Option -%c requires an argument

DESCRIPTION: The option requires a command-line argument

REMEDY: Correct the command line

fore-lane-lecs-10703: %s: Malformed %s

DESCRIPTION: The command-line argument is malformed

REMEDY: Correct the command line

fore-lane-lecs-20001: Commencing service

DESCRIPTION: The LECS is commencing service

fore-lane-lecs-20002: Concluding service

DESCRIPTION: The LECS is concluding service

fore-lane-lecs-20401: LE configuration request too big

DESCRIPTION: The **`LE_CONFIGURE_REQUEST`** frame is followed by unusable data

REMEDY: Report problem to your LEC vendor

fore-lane-lecs-20402: LE configuration request TLV error

DESCRIPTION: The number and/or length of the TLV's encoded in the **`LE_CONFIGURE_REQUEST`** frame are inconsistent

REMEDY: Report problem to your LEC vendor

fore-lane-lecs-20403: Ignoring TLV %08lx (len==%u)

DESCRIPTION: The LECS is ignoring the given TLV encoding

REMEDY: Report problem to your LEC vendor

fore-lane-lecs-20404: Database reloaded

DESCRIPTION: The configuration file has been re-read

fore-lane-lecs-20501: VCD %lu: SETUP from %s

DESCRIPTION: Received **`SD_EVENTTYPE_SETUP`** event

fore-lane-lecs-20502: VCD %lu: DATA

DESCRIPTION: Received **`SD_EVENTTYPE_DATA`** event

fore-lane-lecs-20503: VCD %lu: RELEASE

DESCRIPTION: Received **`SD_EVENTTYPE_RELEASE`** event

fore-lane-lecs-20504: VCD %lu: RELEASECOMPLETE

DESCRIPTION: Received **`SD_EVENTTYPE_RELEASECOMPLETE`** event

fore-lane-lecs-20505: VCD %lu: SD_EVENTTYPE_#%u

DESCRIPTION: Received an unexpected signaling event

REMEDY: Report problem to your vendor

fore-lane-lecs-20506: Listen on %s

DESCRIPTION: LECS listening on ATM address

fore-lane-lecs-20507: Listen on %u.%u (VCD %lu)

DESCRIPTION: LECS listening on PVC

fore-lane-lecs-20508: VCD %lu: recv %u

DESCRIPTION: LECS received data

fore-lane-lecs-20509: VCD %lu: send %lu

DESCRIPTION: LECS sending data

fore-lane-lecs-20510: VCD %lu: closed

DESCRIPTION: Connection closed

fore-lane-lecs-20511: VCD %lu: timer ON (%ldms)

DESCRIPTION: An idle-release timer has been set

fore-lane-lecs-20512: VCD %lu: timer OFF

DESCRIPTION: An idle-release timer has been reset

fore-lane-lecs-20513: VCD %lu: idle release

DESCRIPTION: An idle connection is being released

fore-lane-lecs-20514: VCD %lu: active release

DESCRIPTION: An active connection is being released

Acronyms

The networking terms in the following list are defined in the Glossary of this manual. Glossary items are listed alphabetically according to the full term.

AAL	ATM Adaptation Layer
ABR	Available Bit Rate
ACM	Address Complete Message
ACR	Allowable Cell Rate
ADPCM	Adaptive Differential Pulse Code Modulation
AHFG	ATM-attached Host Functional Group
AIMUX	ATM Inverse Multiplexing
AIS	Alarm Indication Signal
AMI	Alternate Mark Inversion
AMI	ATM Management Interface
ANSI	American National Standards Institute
APCM	Adaptive Pulse Code Modulation
API	Application Program Interface
APP	Application Program
APS	Automatic Protection Switching
ARP	Address Resolution Protocol
ASCII	American Standard Code for Information Interchange
ATDM	Asynchronous Time Division Multiplexing
ATM	Asynchronous Transfer Mode
AUI	Attachment User Interface
B8ZS	Bipolar 8 Zero Substitution
BCOB	Broadband Connection Oriented Bearer
BCOB-A	Bearer Class A
BCOB-C	Bearer Class C
BCOB-X	Bearer Class X
BECN	Backward Explicit Congestion Notification
BER	Bit Error Rate
BES	Bursty Errored Seconds
BGP	Border Gateway Protocol
B-ICI	B-ISDN Inter-Carrier Interface.
BIP	Bit Interleaved Parity
B-ISDN	Broadband Integrated Services Digital Network
B-ISUP	Broadband ISDN User's Part

BITS	Building Integrated Timing Supply
BNC	Bayonet-Neill-Concelman
BPDU	Bridge Protocol Data Unit
bps	Bits per Second
BPV	Bipolar Violation
B-TE	Broadband Terminal Equipment
BUS	Broadcast and Unknown Server
CAC	Connection Admission Control
CAS	Channel Associated Signaling
CBDS	Connectionless Broadband Data Service
CBR	Constant Bit Rate
CCITT	International Telephone and Telegraph Consultative Committee
CCS	Common Channel Signaling
CDV	Cell Delay Variation
CE	Connection Endpoint
CEI	Connection Endpoint Identifier
CES	Circuit Emulation Service
CGA	Carrier Group Alarm
CIP	Carrier Identification Parameter
CIR	Committed Information Rate
CLIP	Classical IP
CLP	Cell Loss Priority
CLR	Cell Loss Ratio-1-15
CLS	Connectionless service
CMIP	Common Management Interface Protocol
CMR	Cell Misinsertion Rate
CPE	Customer Premise Equipment
CRA	Cell Rate Adaptation
CRC	Cyclic Redundancy Check
CRS	Cell Relay Service
CS	Controlled Slip, **or** Convergence Sublayer
CSU	Channel Service Unit
CTD	Cell Transfer Delay
CTS	Clear To Send
DACS	Digital Access and Cross-Connect System
DARPA	Defense Advanced Research Projects Agency
DCC	Data Country Code
DCE	Data Communications Equipment
DCS	Digital Cross-connect System
DES	Destination End Station
DFA	DXI Frame Address
DLCI	Data Link Connection Identifier

DNS	Domain Naming System
DSn	Digital Standard n (n=0, 1, 1C, 2, and 3)
DSR	Data Set Ready
DTE	Data Terminal Equipment
DTR	Data Terminal Ready
EEPROM	Electrically Erasable Programmable Read Only Memory
EFCI	Explicit Forward Congestion Indication
EGP	Exterior Gateway Protocol
EIA	Electronics Industries Association
EISA	Extended Industry Standard Architecture
ELAN	Emulated Local Area Network
EMI	Electromagnetic Interference
EPROM	Erasable Programmable Read Only Memory
EQL	Equalization
ER	Explicit Rate
ES	End System, **or** Errored Second
ESF	Extended Super Frame
ESI	End System Identifier
EXZ	Excessive Zeroes (Error Event)
FC	Face Contact
FCC	Federal Communications Commission
FCS	Frame Check Sequence
FDDI	Fiber Distributed Data Interface
FDM	Frequency Division Multiplexing
FEBE	Far End Block Error
FEC	Forward Error Correction
FECN	Forward Explicit Congestion Notification
FERF	Far End Receive Failure
FIFO	First-In, First-Out
FRS	Frame-Relay Service
FTP	File Transfer Protocol
FT-PNNI	ForeThought PNNI
FUNI	Frame-Based UNI
GCAC	Generic Connection Admission Control
GCRA	Generic Cell Rate Algorithm
GFC	Generic Flow Control
HDB3	High Density Bipolar
HDLC	High Level Data Link Control
HEC	Header Error Control
HIPPI	High Performance Parallel Interface
HSSI	High-Speed Serial Interface
ICMP	Internet Control Message Protocol

IDU	Interface Data Unit
IEEE	Institute of Electrical and Electronics Engineers
IETF	Internet Engineering Task Force
ILMI	Interim Local Management Interface
IP	Internet Protocol
IPX	Internetwork Packet Exchange
IS	Intermediate system
ISDN	Integrated Services Digital Network
ISO	International Standards Organization
ITU-T	International Telecommunication Union Telecommunication
IWF	Interworking Function
IXC	Interexchange Carriers
JPEG	Joint Photographic Experts Group
Kbps	Kilobits per second
LAN	Local Area Network
LANE	LAN Emulation
LAPB	Link Access Procedure, Balanced
LATA	Local Access and Transport Area
LBO	Line Build Out
LCV	Line Code Violations
LE_ARP	LAN Emulation Address Resolution Protocol
LEC	LAN Emulation Client
LECS	LAN Emulation Configuration Server
LES	LAN Emulation Server
LLC	Logical Link Control
LOF	Loss Of Frame
LOP	Loss Of Pointer
LOS	Loss Of Signal
LSB	Least Significant Bit
MAC	Media Access Control
MAN	Metropolitan Area Network
MAU	Media Attachment Unit
MBS	Maximum Burst Size
MCDV	Maximum Cell Delay Variance
MCLR	Maximum Cell Loss Ratio
MCR	Minimum Cell Rate
MCTD	Maximum Cell Transfer Delay
MIB	Management Information Base
MIC	Media Interface Connector
MID	Message Identifier
MMF	Multimode Fiber Optic Cable
MPEG	Motion Picture Experts Group
MPOA	Multiprotocol over ATM

MSB	Most Significant Bit
MTU	Maximum Transmission Unit
NM	Network Management Entity
NML	Network Management Layer
NMS	Network Management Station
NNI	Network-to-Network Interface or Network Node Interface
NPC	Network Parameter Control
NRZ	Non Return to Zero
NRZI	Non Return to Zero Inverted
NSAP	Network Service Access Point
NTSC	National TV Standards Committee
OAM	Operation and Maintenance Cell
OC-n	Optical Carrier level-n
OID	Object Identifier
OOF	Out-of-Frame
OSI	Open Systems Interconnection
OSPF	Open Shortest Path First Protocol
OUI	Organizationally Unique Identifier
PAD	Packet Assembler Disassembler
PAL	Phase Alternate Line
PBX	Private Branch Exchange
PCI	Peripheral Component Interconnect
PCM	Pulse Code Modulation
PCR	Peak Cell Rate
PDN	Public Data Network
PDU	Protocol Data Unit
PHY	Physical Layer
ping	Packet Internet Groper
PLCP	Physical Layer Convergence Protocol
PLP	Packet Level Protocol
PM	Physical Medium
PMD	Physical Medium Dependent
PNNI	Private Network Node Interface or Private Network-to-Network Interface
PPP	Point-to-Point Protocol
PROM	Programmable Read-Only Memory
PRS	Primary Reference Source
PSN	Packet Switched Network
PT	Payload Type
PVC	Permanent Virtual Circuit (or Channel)
PVCC	Permanent Virtual Channel Connection
PVPC	Permanent Virtual Path Connection
QD	Queuing Delay
QoS	Quality of Service

RD	Routing Domain
RFCs	Requests For Comment
RFI	Radio Frequency Interference
RIP	Routing Information Protocol
RISC	Reduced Instruction Set Computer
RTS	Request To Send
SA	Source Address
SA	Source MAC Address
SAP	Service Access Point
SAR	Segmentation And Reassembly
SC	Structured Cabling, **or** Structured Connectors, **or** Stick and Click
SCR	Sustainable Cell Rate
SCSI	Small Computer Systems Interface
SDLC	Synchronous Data Link Control
SDU	Service Data Unit
SEAL	Simple and Efficient Adaptation Layer
SECAM	Systeme En Coleur Avec Memoire
SEL	Selector
SES	Severely Errored Seconds
SF	Super Frame
SGMP	Simple Gateway Management Protocol
SIR	Sustained Information Rate
SLIP	Serial Line IP
SMDS	Switched Multimegabit Data Service
SMF	Single Mode Fiber
SMTP	Simple Mail Transfer Protocol
SNA	Systems Network Architecture
SNAP	SubNetwork Access Protocol
SNI	Subscriber Network Interface
SNMP	Simple Network Management Protocol
SONET	Synchronous Optical Network
SPANS	Simple Protocol for ATM Network Signalling
SPARC	Scalable Processor Architecture Reduced instruction set Computer
SPE	Synchronous Payload Envelope
SPVC	Smart PVC
SS7	Signaling System No. 7
SSCOP	Service Specific Connection Oriented Protocol
SSCS	Service Specific Convergence Sublayer
ST	Straight Tip, **or** Stick and Turn
STM	Synchronous Transfer Mode

STP	Shielded Twisted Pair, Spanning Tree Protocol
STS	Synchronous Transport Signal
SVC	Switched Virtual Circuit (or Channel)
SVCC	Switched Virtual Channel Connection
SVPC	Switched Virtual Path Connection
TAXI	Transparent Asynchronous Transmitter / Receiver Interface
TC	Transmission Convergence
TCP	Transmission Control Protocol
TCP/IP	Transmission Control Protocol / Internet Protocol
TCR	Tagged Cell Rate
TCS	Transmission Convergence Sublayer
TDM	Time Division Multiplexing
TE	Terminal Equipment
TFTP	Trivial File Transfer Protocol
TM	Traffic Management
UAS	Unavailable Seconds
UBR	Unspecified Bit Rate
UDP	User Datagram Protocol
UNI	User-to-Network Interface
UPC	Usage Parameter Control
UTOPIA	Universal Test & Operations Interface for ATM
UTP	Unshielded Twisted Pair
VBR	Variable Bit Rate
VC	Virtual Channel (or Circuit)
VCC	Virtual Channel Connection
VCI	Virtual Channel Identifier
VCL	Virtual Channel Link
VINES	Virtual Network Software
VLAN	Virtual Local Area Network
VP	Virtual Path
VPC	Virtual Path Connection
VPDN	Virtual Private Data Network
VPI	Virtual Path Identifier
VPL	Virtual Path Link
VPN	Virtual Private Network
VPT	Virtual Path Terminator
VS/VD	Virtual Source / Virtual Destination
VT	Virtual Tributary
WAN	Wide-Area Network
ZBTSI	Zero Byte Time Slot Interchange

Glossary

10Base-T - a 10 Mbps baseband Ethernet specification utilizing twisted-pair cabling (Category 3, 4, or 5). 10BaseT, which is part of the IEEE 802.3 specification, has a distance limit of approximately 100 meters per segment.

802.1d Spanning Tree Bridging - the IEEE standard for bridging; a MAC layer standard for transparently connecting two or more LANs (often called subnetworks) that are running the same protocols and cabling. This arrangement creates an extended network, in which any two workstations on the linked LANs can share data.

802.3 Ethernet - the IEEE standard for Ethernet; a physical-layer standard that uses the CSMA / CD access method on a bus-topology LAN.

802.5 Token Ring - the IEEE physical-layer standard that uses the token-passing access method on a ring-topology LAN.

AAL Connection - an association established by the AAL between two or more next higher layer entities.

Adapter - A fitting that supplies a passage between two sets of equipment when they cannot be directly interconnected.

Adaptive Differential Pulse Code Modulation (ADPCM) - A technique that allows analog voice signals to be carried on a 32K bps digital channel. Sampling is done at 8Hz with 4 bits used to describe the difference between adjacent samples.

Adaptive Pulse Code Modulation (APCM) - A technique that effectively reduces occupied bandwidth per active speaker by reducing sampling rates during periods of overflow peak traffic.

Address - A unique identity of each network station on a LAN or WAN.

Address Complete Message (ACM) - A B-ISUP call control message from the receiving exchange to sending exchange indicating the completion of address information.

Address Mask - a bit mask used to identify which bits in an address (usually an IP address) are network significant, subnet significant, and host significant portions of the complete address. This mask is also known as the subnet mask because the subnetwork portion of the address can be determined by comparing the binary version of the mask to an IP address in that subnet. The mask holds the same number of bits as the protocol address it references.

Address Prefix - A string of 0 or more bits up to a maximum of 152 bits that is the lead portion of one or more ATM addresses.

Address Resolution - The procedure by which a client associates a LAN destination with the ATM address of another client or the BUS.

Address Resolution Protocol (ARP) - a method used to resolve higher level protocol addressing (such as IP) into the appropriate header data required for ATM; i.e., port, VPI, and VCI; also defines the AAL type to be used.

Agent - a component of network- and desktop-management software, such as SNMP, that gathers information from MIBs.

alarm - an unsolicited message from a device, typically indicating a problem with the system that requires attention.

Alarm Indication Signal (AIS) - In T1, an all ones condition used to alert a receiver that its incoming signal (or frame) has been lost. The loss of signal or frame is detected at the receiving end, and the failed signal is replaced by all the ones condition which the receiver interprets as an AIS. The normal response to this is AIS is for the receiving end to generate a yellow alarm signal as part of its transmission towards the faulty end. (The AIS itself is sometimes called a Blue Signal).

A-Law - The PCM coding and companding standard used in Europe.

Allowable Cell Rate (ACR) - parameter defined by the ATM Forum for ATM traffic management. ACR varies between the MCR and the PCR, and is dynamically controlled using congestion control mechanisms.

Alternate Mark Inversion (AMI) - A line coding format used on T1 facilities that transmits ones by alternate positive and negative pulses.

Alternate Routing - A mechanism that supports the use of a new path after an attempt to set up a connection along a previously selected path fails.

American National Standards Institute (ANSI) - a private organization that coordinates the setting and approval of some U.S. standards. It also represents the United States to the International Standards Organization.

American Standard Code for Information Interchange (ASCII) - a standard character set that (typically) assigns a 7-bit sequence to each letter, number, and selected control characters.

AppleTalk - a networking protocol developed by Apple Computer for communication between Apple's products and other computers. Independent of the network layer, AppleTalk runs on LocalTalk, EtherTalk and TokenTalk.

Application Layer - Layer seven of the ISO reference model; provides the end-user interface.

Application Program (APP) - a complete, self-contained program that performs a specific function directly for the user.

Application Program Interface (API) - a language format that defines how a program can be made to interact with another program, service, or other software; it allows users to develop custom interfaces with FORE products.

Assigned Cell - a cell that provides a service to an upper layer entity or ATM Layer Management entity (ATMM-entity).

asxmon - a FORE program that repeatedly displays the state of the switch and its active ports.

Asynchronous Time Division Multiplexing (ATDM) - a multiplexing technique in which a transmission capability is organized into a priori, unassigned time slots. The time slots are assigned to cells upon request of each application's instantaneous real need.

Asynchronous Transfer Mode (ATM) - a transfer mode in which the information is organized into cells. It is asynchronous in the sense that the recurrence of cells containing information from an individual user is not necessarily periodic.

ATM Adaptation Layer (AAL) - the AAL divides user information into segments suitable for packaging into a series of ATM cells. AAL layer types are used as follows:

AAL-1 - constant bit rate, time-dependent traffic such as voice and video
AAL-2 - still undefined; a placeholder for variable bit rate video transmission
AAL-3/4 - variable bit rate, delay-tolerant data traffic requiring some sequencing and/or error detection support (originally two AAL types, connection-oriented and connectionless, which have been combined)
AAL-5 - variable bit rate, delay-tolerant, connection-oriented data traffic requiring minimal sequencing or error detection support

ATM Address - Defined in the UNI Specification as 3 formats, each having 20 bytes in length.

ATM Forum - an international non-profit organization formed with the objective of accelerating the use of ATM products and services through a rapid convergence of interoperability specifications. In addition, the Forum promotes industry cooperation and awareness.

ATM Inverse Multiplexing (AIMUX) - A device that allows multiple T1 or E1 communications facilities to be combined into a single broadband facility for the transmission of ATM cells.

ATM Layer link - a section of an ATM Layer connection between two adjacent active ATM Layer entities (ATM-entities).

ATM Link - a virtual path link (VPL) or a virtual channel link (VCL).

ATM Management Interface (AMI) - the user interface to FORE Systems' *ForeThought* switch control software (SCS). AMI lets users monitor and change various operating configurations of FORE Systems switches and network module hardware and software, IP connectivity, and SNMP network management.

ATM Peer-to-Peer Connection - a virtual channel connection (VCC) or a virtual path connection (VPC) directly established, such as workstation-to-workstation. This setup is not commonly used in networks.

ATM Traffic Descriptor - a generic list of parameters that can be used to capture the intrinsic traffic characteristics of a requested ATM connection.

ATM User-to-User Connection - an association established by the ATM Layer to support communication between two or more ATM service users (i.e., between two or more next higher layer entities or between two or more ATM entities). The communication over an ATM Layer connection may be either bidirectional or unidirectional. The same Virtual Channel Identifier (VCI) is used for both directions of a connection at an interface.

atmarp - a FORE program that shows and manipulates ATM ARP entries maintained by the given device driver. This is also used to establish PVC connections.

ATM-attached Host Functional Group (AHFG) - The group of functions performed by an ATM-attached host that is participating in the MPOA service.

atmconfig - a FORE program used to enable or disable SPANS signaling.

atmstat - a FORE program that shows statistics gathered about a given adapter card by the device driver. These statistics include ATM layer and ATM adaptation layer cell and error counts. This can also be used to query other hosts via SNMP.

Attachment User Interface (AUI) - IEEE 802.3 interface between a media attachment unit (MAU) and a network interface card (NIC). The term AUI can also refer to the rear panel port to which an AUI cable might attach.

Auto-logout - a feature that automatically logs out a user if there has been no user interface activity for a specified length of time.

Automatic Protection Switching (APS) - Equipment installed in communications systems to detect circuit failures and automatically switch to redundant, standby equipment.

Available Bit Rate (ABR) - a type of traffic for which the ATM network attempts to meet that traffic's bandwidth requirements. It does not guarantee a specific amount of bandwidth and the end station must retransmit any information that did not reach the far end.

Backbone - the main connectivity device of a distributed system. All systems that have connectivity to the backbone connect to each other, but systems can set up private arrangements with each other to bypass the backbone to improve cost, performance, or security.

Backplane - High-speed communications line to which individual components are connected.

Backward Explicit Congestion Notification (BECN) - A Resource Management cell type generated by the network or the destination, indicating congestion or approaching congestion for traffic flowing in the direction opposite that of the BECN cell.

Bandwidth - usually identifies the capacity or amount of data that can be sent through a given circuit; may be user-specified in a PVC.

Baud - unit of signalling speed, equal to the number of discrete conditions or signal events per second. If each signal event represents only one bit, the baud rate is the same as bps; if each signal event represents more than one bit (such as a dibit), the baud rate is smaller than bps.

Bayonet-Neill-Concelman (BNC) - a bayonet-locking connector used to terminate coaxial cables. BNC is also referred to as Bayonet Network Connector.

Bipolar 8 Zero Substitution (B8ZS) - a technique used to satisfy the ones density requirements of digital T-carrier facilities in the public network while allowing 64 Kbps clear channel data. Strings of eight consecutive zeroes are replaced by an eight-bit code representing two intentional bipolar pulse code violations (000V10V1).

Bipolar Violation (BPV) - an error event on a line in which the normal pattern of alternating high (one) and low (zero) signals is disrupted. A bipolar violation is noted when two high signals occur without an intervening low signal, or vice versa.

B-ISDN Inter-Carrier Interface (B-ICI) - An ATM Forum defined specification for the interface between public ATM networks to support user services across multiple public carriers.

Bit Error Rate (BER) - A measure of transmission quality, generally shown as a negative exponent, (e.g., 10^{-7} which means 1 out of 10^{7} bits [1 out of 10,000,000 bits] are in error).

Bit Interleaved Parity (BIP) - an error-detection technique in which character bit patterns are forced into parity, so that the total number of one bits is always odd or always even. This is accomplished by the addition of a one or zero bit to each byte, as the byte is transmitted; at the other end of the transmission, the receiving device verifies the parity (odd or even) and the accuracy of the transmission.

Bit Robbing - The use of the least significant bit per channel in every sixth frame for signaling.

Bit Stuffing - A process in bit-oriented protocols where a zero is inserted into a string of ones by the sender to prevent the receiver from interpreting valid user data (the string of ones) as control characters (a Flag character for instance).

Border Gateway Protocol (BGP) - used by gateways in an internet connecting autonomous networks. It is derived from experiences learned using the EGP.

bps - bits per second

Bridge - a device that expands a Local Area Network by forwarding frames between data link layers associated with two separate cables, usually carrying a common protocol. Bridges can usually be made to filter certain packets (to forward only certain traffic).

Bridge Protocol Data Unit (BPDU) - A message type used by bridges to exchange management and control information.

Broadband - a service or system requiring transmission channels capable of supporting rates greater than the Integrated Services Digital Network (ISDN) primary rate.

Broadband Access - an ISDN access capable of supporting one or more broadband services.

Broadband Connection Oriented Bearer (BCOB) - Information in the SETUP message that indicates the type of service requested by the calling user.

BCOB-A (Bearer Class A) - Indicated by ATM end user in SETUP message for connection-oriented, constant bit rate service. The network may perform internetworking based on AAL information element (IE).

BCOB-C (Bearer Class C) - Indicated by ATM end user in SETUP message for connection-oriented, variable bit rate service. The network may perform internetworking based on AAL information element (IE).

BCOB-X (Bearer Class X) - Indicated by ATM end user in SETUP message for ATM transport service where AAL, traffic type and timing requirements are transparent to the network.

Broadband Integrated Services Digital Network (B-ISDN) - a common digital network suitable for voice, video, and high-speed data services running at rates beginning at 155 Mbps.

Broadband ISDN User's Part (B-ISUP) - A protocol used to establish, maintain and release broadband switched network connections across an SS7/ATM network.

Broadband Terminal Equipment (B-TE) - An equipment category for B-ISDN which includes terminal adapters and terminals.

Broadcast - Data transmission to all addresses or functions.

Broadcast and Unknown Server (BUS) - in an emulated LAN, the BUS is responsible for accepting broadcast, multicast, and unknown unicast packets from the LECs to the broadcast MAC address (FFFFFFFFFFFF) via dedicated point-to-point connections, and forwarding the packets to all of the members of the ELAN using a single point-to-multipoint connection.

Brouter (bridging/router) - a device that routes some protocols and bridges others based on configuration information.

Buffer - A data storage medium used to compensate of a difference in rate of data flow or time of occurrence of events when transmitting data from one device to another.

Building Integrated Timing Supply (BITS) - a master timing supply for an entire building, which is a master clock and its ancillary equipment. The BITS supplies DS1 and/or composite clock timing references for synchronization to all other clocks and timing sources in that building.

Bursty Errored Seconds (BES) - a BES contains more than 1 and fewer than 320 path coding violation error events, and no severely errored frame or AIS defects. Controlled slips are not included in determining BESs.

Bursty Second - a second during which there were at least the set number of BES threshold event errors but fewer than the set number of SES threshold event errors.

Byte - A computer-readable group of bits (normally 8 bits in length).

Call - an association between two or more users or between a user and a network entity that is established by the use of network capabilities. This association may have zero or more connections.

Carrier - a company, such as any of the "baby Bell" companies, that provide network communications services, either within a local area or between local areas.

Carrier Group Alarm (CGA) - A service alarm generated by a channel bank when an out-of-frame (OOF) condition exists for some predetermined length of time (generally 300 milliseconds to 2.5 seconds). The alarm causes the calls using a trunk to be dropped and trunk conditioning to be applied.

Carrier Identification Parameter (CIP) - A 3 or 4 digit code in the initial address message identifying the carrier to be used for the connection.

cchan - a FORE program that manages virtual channels on a *ForeRunner* switch running `asxd`.

Cell - an ATM Layer protocol data unit (PDU). The basic unit of information transported in ATM technology, each 53-byte cell contains a 5-byte header and a 48-byte payload.

Cell Delay Variation (CDV) - a quantification of cell clumping for a connection. The cell clumping CDV (yk) is defined as the difference between a cell's expected reference arrival time (ck) and its actual arrival time (ak). The expected reference arrival time (ck) of cell k of a specific connection is max. T is the reciprocal of the negotiated peak cell rate.

Cell Delineation - the protocol for recognizing the beginning and end of ATM cells within the raw serial bit stream.

Cell Header - ATM Layer protocol control information.

Cell Loss Priority (CLP) - the last bit of byte four in an ATM cell header; indicates the eligibility of the cell for discard by the network under congested conditions. If the bit is set to 1, the cell may be discarded by the network depending on traffic conditions.

Cell Loss Ratio - In a network, cell loss ratio is (1-x/y), where y is the number of cells that arrive in an interval at an ingress of the network; and x is the number of these y cells that leave at the egress of the network element.

Cell Loss Ratio (CLR) - CLR is a negotiated QoS parameter and acceptable values are network specific. The objective is to minimize CLR provided the end-system adapts the traffic to the changing ATM layer transfer characteristics. The Cell Loss Ratio is defined for a connection as: Lost Cells/Total Transmitted Cells. The CLR parameter is the value of CLR that the network agrees to offer as an objective over the lifetime of the connection. It is expressed as an order of magnitude, having a range of 10-1 to 10-15 and unspecified.

Cell Misinsertion Rate (CMR) - the ratio of cells received at an endpoint that were not originally transmitted by the source end in relation to the total number of cells properly transmitted.

Cell Rate Adaptation (CRA) - a function performed by a protocol module in which empty cells (known as unassigned cells) are added to the output stream. This is because there always must be a fixed number of cells in the output direction; when there are not enough cells to transmit, unassigned cells are added to the output data stream.

Cell Relay Service (CRS) - a carrier service which supports the receipt and transmission of ATM cells between end users in compliance with ATM standards and implementation specifications.

Cell Transfer Delay - the transit delay of an ATM cell successfully passed between two designated boundaries. See CTD.

Cell Transfer Delay (CTD) - This is defined as the elapsed time between a cell exit event at the measurement point 1 (e.g., at the source UNI) and the corresponding cell entry event at the measurement point 2 (e.g., the destination UNI) for a particular connection. The cell transfer delay between two measurement points is the sum of the total inter-ATM node transmission delay and the total ATM node processing delay.

Channel - A path or circuit along which information flows.

Channel Associated Signaling (CAS) - a form of circuit state signaling in which the circuit state is indicated by one or more bits of signaling status sent repetitively and associated with that specific circuit.

Channel Bank - A device that multiplexes many slow speed voice or data conversations onto high speed link and controls the flow.

Channel Service Unit (CSU) - An interface for digital leased lines which performs loopback testing and line conditioning.

Channelization - capability of transmitting independent signals together over a cable while still maintaining their separate identity for later separation.

Circuit - A communications link between points.

Circuit Emulation Service (CES) - The ATM Forum circuit emulation service interoperability specification specifies interoperability agreements for supporting Constant Bit Rate (CBR) traffic over ATM networks that comply with the other ATM Forum interoperability agreements. Specifically, this specification supports emulation of existing TDM circuits over ATM networks.

Classical IP (CLIP) - IP over ATM which conforms to RFC 1577.

Clear to Send (CTS) - and RS-232 modem interface control signal (sent from the modem to the DTE on pin 5) which indicates that the attached DTE may begin transmitting; issuance in response to the DTE's RTS.

Clocking - Regularly timed impulses.

Closed User Group - A subgroup of network users that can be its own entity; any member of the subgroup can only communicate with other members of that subgroup.

Coaxial Cable - Coax is a type of electrical communications medium used in the LAN environment. This cable consists of an outer conductor concentric to an inner conductor, separated from each other by insulating material, and covered by some protective outer material. This medium offers large bandwidth, supporting high data rates with high immunity to electrical interference and a low incidence of errors. Coax is subject to distance limitations and is relatively expensive and difficult to install.

Cold Start Trap - an SNMP trap which is sent after a power-cycle (see *trap*).

Collision - Overlapping transmissions that occur when two or more nodes on a LAN attempt to transmit at or about the same time.

Committed Information Rate (CIR) - CIR is the information transfer rate which a network offering Frame Relay Services (FRS) is committed to transfer under normal conditions. The rate is averaged over a minimum increment of time.

Common Channel Signaling (CCS) - A form signaling in which a group of circuits share a signaling channel. Refer to SS7.

Common Management Interface Protocol (CMIP) - An ITU-TSS standard for the message formats and procedures used to exchange management information in order to operate, administer maintain and provision a network.

Concatenation - The connection of transmission channels similar to a chain.

Concentrator - a communications device that offers the ability to concentrate many lower-speed channels into and out of one or more high-speed channels.

Configuration - The phase in which the LE Client discovers the LE Service.

Congestion Management - traffic management feature that helps ensure reasonable service for VBR connections in an ATM network, based on a priority, sustained cell rate (SCR), and peak cell rate (PCR). During times of congestion, bandwidth is reduced to the SCR, based on the priority of the connection.

Connection - the concatenation of ATM Layer links in order to provide an end-to-end information transfer capability to access points.

Connection Admission Control (CAC) - the procedure used to decide if a request for an ATM connection can be accepted based on the attributes of both the requested connection and the existing connections.

Connection Endpoint (CE) - a terminator at one end of a layer connection within a SAP.

Connection Endpoint Identifier (CEI) - an identifier of a CE that can be used to identify the connection at a SAP.

Connectionless Broadband Data Service (CBDS) - A connectionless service similar to Bellcore's SMDS defined by European Telecommunications Standards Institute (ETSI).

Connectionless Service - a type of service in which no pre-determined path or link has been established for transfer of information, supported by AAL 4.

Connectionless Service (CLS) - A service which allows the transfer of information among service subscribers without the need for end-to- end establishment procedures.

Connection-Oriented Service - a type of service in which information always traverses the same pre-established path or link between two points, supported by AAL 3.

Constant Bit Rate (CBR) - a type of traffic that requires a continuous, specific amount of bandwidth over the ATM network (e.g., digital information such as video and digitized voice).

Controlled Slip (CS) - a situation in which one frame's worth of data is either lost or replicated. A controlled slip typically occurs when the sending device and receiving device are not using the same clock.

Convergence Sublayer (CS) - a portion of the AAL. Data is passed first to the CS where it is divided into rational, fixed-length packets or PDUs (Protocol Data Units). For example, AAL 4 processes user data into blocks that are a maximum of 64 kbytes long.

Corresponding Entities - peer entities with a lower layer connection among them.

cpath - a FORE program used to manage virtual paths on a *ForeRunner* switch running asxd.

cport - a FORE program that monitors and changes the state of ports on a *ForeRunner* switch running `asxd`.

Cross Connection - a mapping between two channels or paths at a network device.

Customer Premise Equipment (CPE) - equipment that is on the customer side of the point of demarcation, as opposed to equipment that is on a carrier side. See also point of demarcation.

Cut Through - Establishment of a complete path for signaling and/or audio communications.

Cyclic Redundancy Check (CRC) - an error detection scheme in which a number is derived from the data that will be transmitted. By recalculating the CRC at the remote end and comparing it to the value originally transmitted, the receiving node can detect errors.

D3/D4 - Refers to compliance with AT&T TR (Technical Reference) 62411 definitions for coding, supervision, and alarm support. D3/D4 compatibility ensures support of digital PBXes, M24 services, Megacom services, and Mode 3 D3/D4 channel banks at DS-1 level.

D4 Channelization - refers to compliance with AT&T Technical Reference 62411 regarding DS1 frame layout (the sequential assignment of channels and time slot numbers within the DS1).

D4 Framed/Framing Format - in T1, a 193-bit frame format in which the 193rd bit is used for framing and signaling information (the frame/framing bit). To be considered in support of D4 Framing, a device must be able to synchronize and frame-up on the 193rd bit.

Data Communications Equipment (DCE) - a definition in the RS232C standard that describes the functions of the signals and the physical characteristics of an interface for a communication device such as a modem.

Data Country Code (DCC) - This specifies the country in which an address is registered. The codes are given in ISO 3166. The length of this field is two octets. The digits of the data country code are encoded in Binary Coded Decimal (BCD) syntax. The codes will be left justified and padded on the right with the hexadecimal value “F” to fill the two octets.

Data Link - Communications connection used to transmit data from a source to a destination.

Data Link Connection Identifier (DLCI) - connection identifier associated with frame relay packets that serves the same functions as, and translates directly to, the VPI/VCI on an ATM cell.

Data Link Layer - Layer 2 of the OSI model, responsible for encoding data and passing it to the physical medium. The IEEE divides this layer into the LLC (Logical Link Control) and MAC (Media Access Control) sublayers.

Data Set Ready (DSR) - an RS-232 modem interface control signal (sent from the modem to the DTE on pin 6) which indicates that the modem is connected to the telephone circuit. Usually a prerequisite to the DTE issuing RTS.

Data Terminal Equipment (DTE) - generally user devices, such as terminals and computers, that connect to data circuit-terminating equipment. They either generate or receive the data carried by the network.

Data Terminal Ready (DTR) - an RS232 modem interface control signal (sent from the DTE to the modem on pin 20) which indicates that the DTE is ready for data transmission and which requests that the modem be connected to the telephone circuit.

Datagram - a packet of information used in a connectionless network service that is routed to its destination using an address included in the datagram's header.

DECnet - Digital Equipment Corporation's proprietary LAN.

Defense Advanced Research Projects Agency (DARPA) - the US government agency that funded the ARPANET.

Demultiplexing - a function performed by a layer entity that identifies and separates SDUs from a single connection to more than one connection (see *multiplexing*).

Destination End Station (DES) - An ATM termination point which is the destination for ATM messages of a connection and is used as a reference point for ABR services. See SES.

Digital Access and Cross-Connect System (DACS) - Digital switching system for routing T1 lines, and DS-0 portions of lines, among multiple T1 ports.

Digital Cross-connect System (DCS) - an electronic patch panel used to route digital signals in a central office.

Digital Standard n (0, 1, 1C, 2, and 3) (DSn) - a method defining the rate and format of digital hierarchy, with asynchronous data rates defined as follows:

DS0	64kb / s	1 voice channel
DS1	1.544Mb / s	24 DS0s
DS1C	3.152 Mb / s	2 DS1s
DS2	6.312 Mb / s	4 DS1s
DS3	44.736 Mb / s	28 DS1s

Synchronous data rates (SONET) are defined as:

STS-1 / OC-1	51.84 Mb / s	28 DS1s or 1 DS3
STS-3 / OC-3	155.52 Mb / s	3 STS-1s byte interleaved
STS-3c / OC-3c	155.52 Mb / s	Concatenated, indivisible payload
STS-12 / OC-12	622.08 Mb / s	12 STS-1s, 4 STS-3cs, or any mixture
STS-12c / OC-12c	622.08 Mb / s	Concatenated, indivisible payload
STS-48 / OC-48	2488.32 Mb / s	48 STS-1s, 16 STS-3cs, or any mixture

DIP (Dual In-line Package) Switch - a device that has two parallel rows of contacts that let the user switch electrical current through a pair of those contacts to on or off. They are used to reconfigure components and peripherals.

Domain Name Server - a computer that converts names to their corresponding Internet numbers. It allows users to telnet or FTP to the name instead of the number.

Domain Naming System (DNS) - the distributed name and address mechanism used in the Internet.

Duplex - Two way communication.

DXI - a generic phrase used in the full names of several protocols, all commonly used to allow a pair of DCE and DTE devices to share the implementation of a particular WAN protocol. The protocols define the packet formats used to transport data between DCE and DTE devices.

DXI Frame Address (DFA) - a connection identifier associated with ATM DXI packets that serves the same functions as, and translates directly to, the VPI/VCI on an ATM cell.

Dynamic Allocation - A technique in which the resources assigned for program execution are determined by criteria applied at the moment of need.

E.164 - A public network addressing standard utilizing up to a maximum of 15 digits. ATM uses E.164 addressing for public network addressing.

E1 - Wide-area digital transmission scheme used predominantly in Europe that carries data at a rate of 2.048 Mbps. E1 lines can be leased for private use from common carriers.

E3 - Wide-area digital transmission scheme used predominantly in Europe that carries data at a rate of 34.368 Mbps. E3 lines can be leased for private use from common carriers.

Edge Device - A physical device which is capable of forwarding packets between legacy interworking interfaces (e.g., Ethernet, Token Ring, etc.) and ATM interfaces based on data-link and network layer information but which does not participate in the running of any network layer routing protocol. An Edge Device obtains forwarding descriptions using the route distribution protocol.

elarp - a FORE program that shows and manipulates MAC and ATM address mappings for LAN Emulation Clients (LECs).

elconfig - a FORE program that shows and modifies LEC configuration. Lets the user set the NSAP address of the LAN Emulation Configuration Server, display the list of Emulated LANs configured in the LECS for this host, display the list of ELANs locally configured along with the membership state of each, and locally administer ELAN membership.

Electrically Erasable Programmable Read Only Memory (EEPROM) - an EPROM that can be cleared with electrical signals rather than the traditional ultraviolet light.

Electromagnetic Interference (EMI) - signals generated and radiated by an electronic device that cause interference with radio communications, among other effects.

Electronics Industries Association (EIA) - a USA trade organization that issues its own standards and contributes to ANSI; developed RS-232. Membership includes USA manufacturers.

Embedded SNMP Agent - an SNMP agent can come in two forms: embedded or proxy. An embedded SNMP agent is integrated into the physical hardware and software of the unit.

Emulated Local Area Network (ELAN) - A logical network initiated by using the mechanisms defined by LAN Emulation. This could include ATM and legacy attached end stations.

End System (ES) - a system where an ATM connection is terminated or initiated (an originating end system initiates the connection; a terminating end system terminates the connection).

End System Identifier (ESI) - This identifier distinguishes multiple nodes at the same level in case the lower level peer group is partitioned.

End-to-End Connection - when used in reference to an ATM network, a connection that travels through an ATM network, passing through various ATM devices and with endpoints at the termination of the ATM network.

Enterprise - Terminology generally referring to customers with multiple, non-contiguous geographic locations.

Equalization (EQL) - the process of compensating for line distortions.

Erasable Programmable Read Only Memory (EPROM) - A PROM which may be erased and rewritten to perform new or different functions (normally done with a PROM burner).

Errored Second (ES) - a second during which at least one code violation occurred.

Ethernet - a 10-Mbps, coaxial standard for LANs in which all nodes connect to the cable where they contend for access.

Excessive Zeroes (EXZ) Error Event - An Excessive Zeroes error event for an AMI-coded signal is the occurrence of more than fifteen contiguous zeroes. For a B8ZS coded signal, the defect occurs when more than seven contiguous zeroes are detected.

Explicit Forward Congestion Indication (EFCI) - the second bit of the payload type field in the header of an ATM cell, the EFCI bit indicates network congestion to receiving hosts. On a congested switch, the EFCI bit is set to “1” by the transmitting network module when a certain number of cells have accumulated in the network module's shared memory buffer. When a cell is received that has its EFCI bit set to “1,” the receiving host notifies the sending host, which should then reduce its transmission rate.

Explicit Rate (ER) - The Explicit Rate is an RM-cell field used to limit the source ACR to a specific value. It is initially set by the source to a requested rate (such as PCR). It may be subsequently reduced by any network element in the path to a value that the element can sustain. ER is formatted as a rate.

Extended Industry Standard Architecture (EISA) - bus architecture for desktop computers that provides a 32-bit data passage and maintains compatibility with the ISA or AT architecture.

Extended Super Frame (ESF) - a T1 framing format that utilizes the 193rd bit as a framing bit, but whose Superframe is made up of 24 frames instead of 12 as in D4 format. ESF also provides CRC error detection and maintenance data link functions.

Exterior Gateway Protocol (EGP) - used by gateways in an internet, connecting autonomous networks.

Fairness - related to Generic Flow Control, fairness is defined as meeting all of the agreed quality of service requirements by controlling the order of service for all active connections.

Far End Block Error (FEBE) - an error detected by extracting the 4-bit FEBE field from the path status byte (G1). The legal range for the 4-bit field is between 0000 and 1000, representing zero to eight errors. Any other value is interpreted as zero errors.

Far End Receive Failure (FERF) - a line error asserted when a 110 binary pattern is detected in bits 6, 7, 8 of the K2 byte for five consecutive frames. A line FERF is removed when any pattern other than 110 is detected in these bits for five consecutive frames.

Far-End - in a relationship between two devices in a circuit, the far-end device is the one that is remote.

Face Contact (FC) - Designation for fiber optic connector designed by Nippon Telegraph and Telephone which features a movable anti-rotation key allowing good repeatable performance despite numerous mating. Normally referred to as Fiber Connector, FC actually stands for Face Contact and sometimes linked with PC (Point Contact), designated as FC or FC-PC.

FCC Part 68 - The FCC rules regulating the direct connection of non-telephone company provided equipment to the public telephone network.

Federal Communications Commission (FCC) - a board of commissioners appointed by the President under the Communications Act of 1934, with the authority to regulate all interstate telecommunications originating in the United States, including transmission over phone lines.

Fiber Distributed Data Interface (FDDI) - high-speed data network that uses fiber-optic as the physical medium. Operates in similar manner to Ethernet or Token Ring, only faster.

File Transfer Protocol (FTP) - a TCP/IP protocol that lets a user on one computer access, and transfer data to and from, another computer over a network. ftp is usually the name of the program the user invokes to accomplish this task.

First-In, First-Out (FIFO) - method of coordinating the sequential flow of data through a buffer.

Flag - a bit pattern of six binary “1”s bounded by a binary “0” at each end (forms a 0111 1110 or Hex “7E”). It is used to mark the beginning and/or end of a frame.

Flow Control - The way in which information is controlled in a network to prevent loss of data when the receiving buffer is near its capacity.

***ForeThought* PNNI (FT-PNNI) -** a FORE Systems routing and signalling protocol that uses private ATM (NSAP) addresses; a precursor to ATM Forum PNNI (see PNNI).

Forward Error Correction (FEC) - A technique used by a receiver for correcting errors incurred in transmission over a communications channel without requiring retransmission of any information by the transmitter; typically involves a convolution of the transmitted bits and the appending of extra bits by both the receiver and transmitter using a common algorithm.

Forward Explicit Congestion Notification (FECN) - Bit set by a Frame Relay network to inform data terminal equipment (DTE) receiving the frame that congestion was experienced in the path from source to destination. DTE receiving frames with the FECN bit set can request that higher-level protocols take flow control action as appropriate.

Fractional T1 - the use of bandwidth in 64Kbps increments up to 1.544Mbps from a T1 facility.

Frame - a variable length group of data bits with a specific format containing flags at the beginning and end to provide demarcation.

Frame Check Sequence (FCS) - In bit-oriented protocols, a 16-bit field that contains transmission error checking information, usually appended to the end of the frame.

Frame Relay - a fast packet switching protocol based on the LAPD protocol of ISDN that performs routing and transfer with less overhead processing than X.25.

Frame Synchronization Error - an error in which one or more time slot framing bits are in error.

Frame-Based UNI (FUNI) - An ATM switch-based interface which accepts frame-based ATM traffic and converts it into cells.

Frame-Relay Service (FRS) - A connection oriented service that is capable of carrying up to 4096 bytes per frame.

Framing - a protocol that separates incoming bits into identifiable groups so that the receiving multiplexer recognizes the grouping.

Frequency Division Multiplexing (FDM) - a method of dividing an available frequency range into parts with each having enough bandwidth to carry one channel.

Gbps - gigabits per second (billion)

Generic Cell Rate Algorithm (GCRA) - an algorithm which is employed in traffic policing and is part of the user / network service contract. The GCRA is a scheduling algorithm which ensures that cells are marked as conforming when they arrive when expected or later than expected and non-conforming when they arrive sooner than expected.

Generic Connection Admission Control (GCAC) - This is a process to determine if a link has potentially enough resources to support a connection.

Generic Flow Control (GFC) - the first four bits of the first byte in an ATM cell header. Used to control the flow of traffic across the User-to-Network Interface (UNI), and thus into the network. Exact mechanisms for flow control are still under investigation and no explicit definition for this field exists at this time. (This field is used only at the UNI; for NNI-NNI use (between network nodes), these four bits provide additional network address capacity, and are appended to the VPI field.)

GIO - a proprietary bus architecture used in certain Silicon Graphics, Inc. workstations.

Header - protocol control information located at the beginning of a protocol data unit.

Header Error Control (HEC) - a CRC code located in the last byte of an ATM cell header that is used for checking cell header integrity only.

High Density Bipolar (HDB3) - A bipolar coding method that does not allow more than 3 consecutive zeroes.

High Level Data Link Control (HDLC) - An ITU-TSS link layer protocol standard for point-to-point and multi-point communications.

High Performance Parallel Interface (HIPPI) - ANSI standard that extends the computer bus over fairly short distances at speeds of 800 and 1600 Mbps.

High-Speed Serial Interface (HSSI) - a serial communications connection that operates at speeds of up to 1.544 Mbps.

Host - In a network, the primary or controlling computer in a multiple computer installation.

HPUX - the Hewlett-Packard version of UNIX.

Hub - a device that connects several other devices, usually in a star topology.

I/O Module - FORE's interface cards for the LAX-20 LAN Access Switch, designed to connect Ethernet, Token Ring, and FDDI LANs to *ForeRunner* ATM networks.

Institute of Electrical and Electronics Engineers (IEEE) - the world's largest technical professional society. Based in the U.S., the IEEE sponsors technical conferences, symposia & local meetings worldwide, publishes nearly 25% of the world's technical papers in electrical, electronics & computer engineering, provides educational programs for members, and promotes standardization.

IEEE 802 - Standards for the interconnection of LAN computer equipment. Deals with the Data Link Layers of the ISO Reference Model for OSI.
IEEE 802.1 - Defines the high-level network interfaces such as architecture, internetworking and network management.
IEEE 802.2 - Defines the Logical Link Control interface between the Data Link and Network Layers.
IEEE 802.3 - Defines CSMA/CD (Ethernet).
IEEE 802.4 - Defines the token-passing bus.
IEEE 802.5 - Defines the Token Ring access methodology. This standard incorporates IBM's Token Ring specifications.
IEEE 802.6 - Defines Metropolitan Area Networks.
IEEE 802.7 - The broadband technical advisory group.
IEEE 802.8 - The fiber optics technical advisory group.
IEEE 802.9 - Defines integrated data and voice networks.

Integrated Services Digital Network (ISDN) - an emerging technology that is beginning to be offered by the telephone carriers of the world. ISDN combines voice and digital network services into a single medium or wire.

Interexchange Carriers (IXC) - Long-distance communications companies that provide service between Local Access Transport Areas (LATAs).

Interface Data - the unit of information transferred to/from the upper layer in a single interaction across a SAP. Each Interface Data Unit (IDU) controls interface information and may also contain the whole or part of the SDU.

Interface Data Unit (IDU) - The unit of information transferred to/from the upper layer in a single interaction across the SAP. Each IDU contains interface control information and may also contain the whole or part of the SDU.

Interim Local Management Interface (ILMI) - the standard that specifies the use of the Simple Network Management Protocol (SNMP) and an ATM management information base (MIB) to provide network status and configuration information.

Intermediate System (IS) - a system that provides forwarding functions or relaying functions or both for a specific ATM connection. OAM cells may be generated and received.

International Standards Organization (ISO) - a voluntary, non treaty organization founded in 1946 that is responsible for creating international standards in many areas, including computers and communications.

International Telephone and Telegraph Consultative Committee (CCITT) - the international standards body for telecommunications.

Internet - (note the capital "I") the largest internet in the world including large national backbone nets and many regional and local networks worldwide. The Internet uses the TCP/IP suite. Networks with only e-mail connectivity are not considered on the Internet.

internet - while an internet is a network, the term "internet" is usually used to refer to a collection of networks interconnected with routers.

Internet Addresses - the numbers used to identify hosts on an internet network. Internet host numbers are divided into two parts; the first is the network number and the second, or local, part is a host number on that particular network. There are also three classes of networks in the Internet, based on the number of hosts on a given network. Large networks are classified as Class A, having addresses in the range 1-126 and having a maximum of 16,387,064 hosts. Medium networks are classified as Class B, with addresses in the range 128-191 and with a maximum of 64,516 hosts. Small networks are classified as Class C, having addresses in the range 192-254 with a maximum of 254 hosts. Addresses are given as dotted decimal numbers in the following format:

nnn.nnn.nnn.nnn

In a Class A network, the first of the numbers is the network number, the last three numbers are the local host address.

In a Class B network, the first two numbers are the network, the last two are the local host address.

In a Class C network, the first three numbers are the network address, the last number is the local host address.

The following table summarizes the classes and sizes:

Class	First #	Max# Hosts
A	1-126	16,387,064
B	129-191	64,516
C	192-223	254

Network mask values are used to identify the network portion and the host portion of the address. Default network masks are as follows:

Class A - 255.0.0.0

Class B - 255.255.0.0

Class C - 255.255.255.0

Subnet masking is used when a portion of the host ID is used to identify a subnetwork. For example, if a portion of a Class B network address is used for a subnetwork, the mask could be set as 255.255.255.0. This would allow the third byte to be used as a subnetwork address. All hosts on the network would still use the IP address to get on the Internet.

Internet Control Message Protocol (ICMP) - the protocol that handles errors and control messages at the IP layer. ICMP is actually a part of the IP protocol layer. It can generate error messages, test packets, and informational messages related to IP.

Internet Engineering Task Force (IETF) - a large, open, international community of network designers, operators, vendors and researchers whose purpose is to coordinate the operation, management and evolution of the Internet to resolve short- and mid-range protocol and architectural issues.

Internet Protocol (IP) - a connectionless, best-effort packet switching protocol that offers a common layer over dissimilar networks.

Internetwork Packet Exchange (IPX) Protocol - a NetWare protocol similar to the Xerox Network Systems (XNS) protocol that provides datagram delivery of messages.

Interoperability - The ability of software and hardware on multiple machines, from multiple vendors, to communicate.

Interworking Function (IWF) - provides a means for two different technologies to interoperate.

IP Address - a unique 32-bit integer used to identify a device in an IP network. You will most commonly see IP addresses written in “dot” notation (e.g., 192.228.32.14).

IP Netmask - a 32-bit pattern that is combined with an IP address to determine which bits of an IP address denote the network number and which denote the host number. Netmasks are useful for sub-dividing IP networks. IP netmasks are written in “dot” notation (e.g., 255.255.0.0).

ISA Bus - a bus standard developed by IBM for expansion cards in the first IBM PC. The original bus supported a data path only 8 bits wide. IBM subsequently developed a 16-bit version for its AT class computers. The 16-bit AT ISA bus supports both 8- and 16-bit cards. The 8-bit bus is commonly called the PC/XT bus, and the 16-bit bus is called the AT bus.

Isochronous - signals carrying embedded timing information or signals that are dependent on uniform timing; usually associated with voice and/or video transmission.

International Telecommunications Union Telecommunications (ITU-T) - an international body of member countries whose task is to define recommendations and standards relating to the international telecommunications industry. The fundamental standards for ATM have been defined and published by the ITU-T (Previously CCITT).

J2 - Wide-area digital transmission scheme used predominantly in Japan that carries data at a rate of 6.312 Mbps.

Jitter - analog communication line distortion caused by variations of a signal from its reference timing position.

Joint Photographic Experts Group (JPEG) - An ISO Standards group that defines how to compress still pictures.

Jumper - a patch cable or wire used to establish a circuit, often temporarily, for testing or diagnostics; also, the devices, shorting blocks, used to connect adjacent exposed pins on a printed circuit board that control the functionality of the card.

Kbps - kilobits per second (thousand)

LAN Access Concentrator - a LAN access device that allows a shared transmission medium to accommodate more data sources than there are channels currently available within the transmission medium.

LAN Emulation Address Resolution Protocol (LE_ARP) - A message issued by a LE client to solicit the ATM address of another function.

LAN Emulation Client (LEC) - the component in an end system that performs data forwarding, address resolution, and other control functions when communicating with other components within an ELAN.

LAN Emulation Configuration Server (LECS) - the LECS is responsible for the initial configuration of LECs. It provides information about available ELANs that a LEC may join, together with the addresses of the LES and BUS associated with each ELAN.

LAN Emulation Server (LES) - the LES implements the control coordination function for an ELAN by registering and resolving MAC addresses to ATM addresses.

LAN Emulation (LANE) - technology that allows an ATM network to function as a LAN backbone. The ATM network must provide multicast and broadcast support, address mapping (MAC-to-ATM), SVC management, and a usable packet format. LANE also defines Ethernet and Token Ring ELANs.

lane - a program that provides control over the execution of the LAN Emulation Server (LES), Broadcast/Unknown Server (BUS), and LAN Emulation Configuration Server (LECS) on the local host.

Latency - The time interval between a network station seeking access to a transmission channel and that access being granted or received.

Layer Entity - an active layer within an element.

Layer Function - a part of the activity of the layer entities.

Layer Service - a capability of a layer and the layers beneath it that is provided to the upper layer entities at the boundary between that layer and the next higher layer.

Layer User Data - the information transferred between corresponding entities on behalf of the upper layer or layer management entities for which they are providing services.

le - a FORE program that implements both the LAN Emulation Server (LES) and the Broadcast/Unknown Server (BUS).

Leaky Bucket - informal cell policing term for the Generic Cell Rate Algorithm which in effect receives cells into a bucket and leaks them out at the specified or contracted rate (i.e., PCR).

Least Significant Bit (LSB) - lowest order bit in the binary representation of a numerical value.

lecs - a FORE program that implements the assignment of individual LECs to different emulated LANs.

leq - a FORE program that provides information about an ELAN. This information is obtained from the LES, and includes MAC addresses registered on the ELAN together with their corresponding ATM addresses.

Line Build Out (LBO) - Because T1 circuits require the last span to lose 15-22.5 dB, a selectable output attenuation is generally required of DTE equipment (typical selections include 0.0, 7.5 and 15 dB of loss at 772 KHz).

Line Code Violations (LCV) - Error Event. A Line Coding Violation (LCV) is the occurrence of either a Bipolar Violation (BPV) or Excessive Zeroes (EXZ) Error Event.

Link - An entity that defines a topological relationship (including available transport capacity) between two nodes in different subnetworks. Multiple links may exist between a pair of subnetworks. Synonymous with logical link.

Link Access Procedure, Balanced (LAPB) - Data link protocol in the X.25 protocol stack. LAPB is a bit-oriented protocol derived from HDLC. See also HDLC and X.25.

Link Down Trap - an SNMP trap, sent when an interface changes from a normal state to an error state, or is disconnected.

Link Layer - layer in the OSI model regarding transmission of data between network nodes.

Link Up Trap - an SNMP trap, sent when an interface changes from an error condition to a normal state.

Load Sharing - Two or more computers in a system that share the load during peak hours. During periods of non peak hours, one computer can manage the entire load with the other acting as a backup.

Local Access and Transport Area (LATA) - Geographic boundaries of the local telephone network, specified by the FCC, in which a single LEC may perform its operations. Communications outside or between LATAs are provided by IXCs.

Local Area Network (LAN) - a data network intended to serve an area of only a few square kilometers or less. Because the network is known to cover only a small area, optimizations can be made in the network signal protocols that permit higher data rates.

Logical Link Control (LLC) - protocol developed by the IEEE 802 committee for data-link-layer transmission control; the upper sublayer of the IEEE Layer 2 (OSI) protocol that complements the MAC protocol; IEEE standard 802.2; includes end-system addressing and error checking.

Loopback - a troubleshooting technique that returns a transmitted signal to its source so that the signal can be analyzed for errors. Typically, a loopback is set at various points in a line until the section of the line that is causing the problem is discovered.

looptest - program that tests an interface for basic cell reception and transmission functionality, usually used for diagnostic purposes to determine if an interface is functioning properly.

Loss Of Frame (LOF) - a type of transmission error that may occur in wide-area carrier lines.

Loss Of Pointer (LOP) - a type of transmission error that may occur in wide-area carrier lines.

Loss Of Signal (LOS) - a type of transmission error that may occur in wide-area carrier lines, or a condition declared when the DTE senses a loss of a DS1 signal from the CPE for more the 150 milliseconds (the DTE generally responds with an all ones “Blue or AIS” signal).

Management Information Base (MIB) - the set of parameters that an SNMP management station can query or set in the SNMP agent of a networked device (e.g., router).

Maximum Burst Size (MBS) - the Burst Tolerance (BT) is conveyed through the MBS which is coded as a number of cells. The BT together with the SCR and the GCRA determine the MBS that may be transmitted at the peak rate and still be in conformance with the GCRA.

Maximum Burst Tolerance - the largest burst of data that a network device is guaranteed to handle without discarding cells or packets. Bursts of data larger than the maximum burst size may be subject to discard.

Maximum Cell Delay Variance (MCDV) - This is the maximum two-point CDV objective across a link or node for the specified service category.

Maximum Cell Loss Ratio (MCLR) - This is the maximum ratio of the number of cells that do not make it across the link or node to the total number of cells arriving at the link or node.

Maximum Cell Transfer Delay (MCTD) - This is the sum of the fixed delay component across the link or node and MCDV.

Maximum Transmission Unit (MTU) - the largest unit of data that can be sent over a type of physical medium.

Mbps - megabits per second (million)

Media Access Control (MAC) - a media-specific access control protocol within IEEE 802 specifications; currently includes variations for Token Ring, token bus, and CSMA/CD; the lower sublayer of the IEEE’s link layer (OSI), which complements the Logical Link Control (LLC).

Media Attachment Unit (MAU) - device used in Ethernet and IEEE 802.3 networks that provides the interface between the AUI port of a station and the common medium of the Ethernet. The MAU, which can be built into a station or can be a separate device, performs physical layer functions including conversion of the digital data from the Ethernet interface, collision detection, and injection of bits onto the network.

Media Interface Connector (MIC) - fiber optic connector that joins fiber to the FDDI controller.

Message Identifier (MID) - message identifier used to associate ATM cells that carry segments from the same higher layer packet.

Metasignalling - an ATM Layer Management (LM) process that manages different types of signalling and possibly semipermanent virtual channels (VCs), including the assignment, removal, and checking of VCs.

Metasignalling VCs - the standardized VCs that convey metasignalling information across a User-to-Network Interface (UNI).

Metropolitan Area Network (MAN) - network designed to carry data over an area larger than a campus such as an entire city and its outlying area.

MicroChannel - a proprietary 16- or 32-bit bus developed by IBM for its PS/2 computers' internal expansion cards; also offered by others.

Minimum Cell Rate (MCR) - parameter defined by the ATM Forum for ATM traffic management, defined only for ABR transmissions and specifying the minimum value for the ACR.

Most Significant Bit (MSB) - highest order bit in the binary representation of a numerical value.

Motion Picture Experts Group (MPEG) - ISO group dealing with video and audio compression techniques and mechanisms for multiplexing and synchronizing various media streams.

MPOA Client - A device which implements the client side of one or more of the MPOA protocols, (i.e., is a SCP client and/or an RDP client. An MPOA Client is either an Edge Device Functional Group (EDFG) or a Host Behavior Functional Group (HBFG).

MPOA Server - An MPOA Server is any one of an ICFG or RSFG.

MPOA Service Area - The collection of server functions and their clients. A collection of physical devices consisting of an MPOA server plus the set of clients served by that server.

MPOA Target - A set of protocol address, path attributes, (e.g., internetwork layer QoS, other information derivable from received packet) describing the intended destination and its path attributes that MPOA devices may use as lookup keys.

Mu-Law - The PCM coding and companding standard used in Japan and North America.

Multicasting - The ability to broadcast messages to one node or a select group of nodes.

Multi-homed - a device having both an ATM and another network connection, like Ethernet.

Multimode Fiber Optic Cable (MMF) - fiber optic cable in which the signal or light propagates in multiple modes or paths. Since these paths may have varying lengths, a transmitted pulse of light may be received at different times and smeared to the point that pulses may interfere with surrounding pulses. This may cause the signal to be difficult or impossible to receive. This pulse dispersion sometimes limits the distance over which a MMF link can operate.

Multiplexing - a function within a layer that interleaves the information from multiple connections into one connection (see demultiplexing).

Multipoint Access - user access in which more than one terminal equipment (TE) is supported by a single network termination.

Multipoint-to-Multipoint Connection - a collection of associated ATM VC or VP links, and their associated endpoint nodes, with the following properties:

1. All N nodes in the connection, called Endpoints, serve as a Root Node in a Point-to-Multipoint connection to all of the (N-1) remaining endpoints.

2. Each of the endpoints can send information directly to any other endpoint, but the receiving endpoint cannot distinguish which of the endpoints is sending information without additional (e.g., higher layer) information.

Multipoint-to-Point Connection - a Point-to-Multipoint Connection may have zero bandwidth from the Root Node to the Leaf Nodes, and non-zero return bandwidth from the Leaf Nodes to the Root Node. Such a connection is also known as a Multipoint-to-Point Connection.

Multiprotocol over ATM (MPOA) - An effort taking place in the ATM Forum to standardize protocols for the purpose of running multiple network layer protocols over ATM.

Narrowband Channel - sub-voicegrade channel with a speed range of 100 to 200 bps.

National TV Standards Committee (NTSC) - Started in the US in 1953 from a specification laid down by the National Television Standards Committee. It takes the B-Y and R-Y color difference signals, attenuates them to I and Q, then modulates them using double-sideband suppressed subcarrier at 3.58MHz. The carrier reference is sent to the receiver as a burst during the back porch. An industry group that defines how television signals are encoded and transmitted in the US. (See also PAL, SECAM for non-U.S. countries).

Near-End - in a relationship between two devices in a circuit, the near-end device is the one that is local.

Network Layer - Layer three In the OSI model, the layer that is responsible for routing data across the network.

Network Management Entity (NM) - body of software in a switching system that provides the ability to manage the PNNI protocol. NM interacts with the PNNI protocol through the MIB.

Network Management Layer (NML) - an abstraction of the functions provided by systems which manage network elements on a collective basis, providing end-to-end network monitoring.

Network Management Station (NMS) - system responsible for managing a network or portion of a network by talking to network management agents, which reside in the managed nodes.

Network Module - ATM port interface cards which may be individually added to or removed from any *ForeRunner* ATM switch to provide a diverse choice of connection alternatives.

Network Parameter Control (NPC) - Defined as the set of actions taken by the network to monitor and control traffic from the NNI. Its main purpose is to protect network resources from malicious as well as unintentional misbehavior which can affect the QoS of other already established connections by detecting violations of negotiated parameters and taking appropriate actions. Refer to UPC.

Network Redundancy - Duplicated network equipment and/or data which can provide a backup in case of network failures.

Network Service Access Point (NSAP) - OSI generic standard for a network address consisting of 20 octets. ATM has specified E.164 for public network addressing and the NSAP address structure for private network addresses.

Network-to-Network Interface or Network Node Interface (NNI) - the interface between two public network pieces of equipment.

Node - A computer or other device when considered as part of a network.

Non Return to Zero (NRZ) - a binary encoding scheme in which ones and zeroes are represented by opposite and alternating high and low voltages and where there is no return to a zero (reference) voltage between encoded bits.

Non Return to Zero Inverted (NRZI) - A binary encoding scheme that inverts the signal on a “1” and leaves the signal unchanged for a “0”. (Also called transition encoding.)

Nonvolatile Storage - Memory storage that does not lose its contents when power is turned off.

NuBus - a high-speed bus used in Macintosh computers, structured so users can put a card into any slot on the board without creating conflict over the priority between those cards.

nx64K - This refers to a circuit bandwidth or speed provided by the aggregation of nx64 kbps channels (where n= integer > 1). The 64K or DS0 channel is the basic rate provided by the T Carrier systems.

Nyquist Theorem - In communications theory, a formula stating that two samples per cycle is sufficient to characterize a bandwidth limited analog signal; in other words, the sampling rate must be twice the highest frequency component of the signal (i.e., sample 4 KHz analog voice channels 8000 times per second).

Object Identifier (OID) - the address of a MIB variable.

Octet - a grouping of 8 bits; similar, but not identical to, a byte.

One’s Density - The requirement for digital transmission lines in the public switched telephone network that eight consecutive “0”s cannot be in a digital data stream; exists because repeaters and clocking devices within the network will lose timing after receiving eight “0”s in a row; a number of techniques are used to insert a “1” after every seventh-consecutive “0” (see Bit Stuffing).

Open Shortest Path First (OSPF) Protocol - a routing algorithm for IP that incorporates least-cost, equal-cost, and load balancing.

Open Systems Interconnection (OSI) - the 7-layer suite of protocols designed by ISO committees to be the international standard computer network architecture.

OpenView - Hewlett-Packard's network management software.

Operation and Maintenance (OAM) Cell - a cell that contains ATM LM information. It does not form part of the upper layer information transfer.

Optical Carrier level-n (OC-n) - The optical counterpart of STS-n (the basic rate of 51.84 Mbps on which SONET is based is referred to as OC-1 or STS-1).

Organizationally Unique Identifier (OUI) - Part of RFC 1483. A three-octet field in the SubNetwork Attachment Point (SNAP) header, identifying an organization which administers the meaning of the following two octet Protocol Identifier (PID) field in the SNAP header. Together they identify a distinct routed or bridged protocol.

Out-of-Band Management - refers to switch configuration via the serial port or over Ethernet, not ATM.

Out-of-Frame (OOF) - a signal condition and alarm in which some or all framing bits are lost.

Packet - An arbitrary collection of data grouped and transmitted with its user identification over a shared facility.

Packet Assembler Disassembler (PAD) - interface device that buffers data sent to/from character mode devices, and assembles and disassembles the packets needed for X.25 operation.

Packet Internet Groper (ping) - a program used to test reachability of destinations by sending them an ICMP echo request and waiting for a reply.

Packet Level Protocol (PLP) - Network layer protocol in the X.25 protocol stack. Sometimes called X.25 Level 3 or X.25 Protocol.

Packet Switched Network (PSN) - a network designed to carry data in the form of packets. The packet and its format is internal to that network.

Packet Switching - a communications paradigm in which packets (messages) are individually routed between hosts with no previously established communications path.

Payload Scrambling - a technique that eliminates certain bit patterns that may occur within an ATM cell payload that could be misinterpreted by certain sensitive transmission equipment as an alarm condition.

Payload Type (PT) - bits 2...4 in the fourth byte of an ATM cell header. The PT indicates the type of information carried by the cell. At this time, values 0...3 are used to identify various types of user data, values 4 and 5 indicate management information, and values 6 and 7 are reserved for future use.

Peak Cell Rate - at the PHY Layer SAP of a point-to-point VCC, the Peak Cell Rate is the inverse of the minimum inter-arrival time T0 of the request to send an ATM-SDU.

Peak Cell Rate (PCR) - parameter defined by the ATM Forum for ATM traffic management. In CBR transmissions, PCR determines how often data samples are sent. In ABR transmissions, PCR determines the maximum value of the ACR.

Peer Entities - entities within the same layer.

Peripheral Component Interconnect (PCI) - a local-bus standard created by Intel.

Permanent Virtual Channel Connection (PVCC) - A Virtual Channel Connection (VCC) is an ATM connection where switching is performed on the VPI/VCI fields of each cell. A Permanent VCC is one which is provisioned through some network management function and left up indefinitely.

Permanent Virtual Circuit (or Channel) (PVC) - a circuit or channel through an ATM network provisioned by a carrier between two endpoints; used for dedicated long-term information transport between locations.

Permanent Virtual Path Connection (PVPC) - A Virtual Path Connection (VPC) is an ATM connection where switching is performed on the VPI field only of each cell. A PVPC is one which is provisioned through some network management function and left up indefinitely.

Phase Alternate Line (PAL) - Largely a German/British development in the late 60s, used in the UK and much of Europe. The B-Y and R-Y signals are weighted to U and V, then modulated onto a double-sideband suppressed subcarrier at 4.43MHz. The V (R-Y) signal's phase is turned through 180 degrees on each alternate line. This gets rid of NTSC's hue changes with phase errors at the expense of de-saturation. The carrier reference is sent as a burst in the back porch. The phase of the burst is alternated every line to convey the phase switching of the V signal. The burst's average phase is -V. (see NTSC for U.S.).

Physical Layer (PHY) - the actual cards, wires, and/or fiber-optic cabling used to connect computers, routers, and switches.

Physical Layer Connection - an association established by the PHY between two or more ATM-entities. A PHY connection consists of the concatenation of PHY links in order to provide an end-to-end transfer capability to PHY SAPs.

Physical Layer Convergence Protocol (PLCP) - a framing protocol that runs on top of the T1 or E1 framing protocol.

Physical Medium (PM) - Refers to the actual physical interfaces. Several interfaces are defined including STS-1, STS-3c, STS-12c, STM-1, STM-4, DS1, E1, DS2, E3, DS3, E4, FDDI-based, Fiber Channel-based, and STP. These range in speeds from 1.544Mbps through 622.08 Mbps.

Physical Medium Dependent (PMD) - a sublayer concerned with the bit transfer between two network nodes. It deals with wave shapes, timing recovery, line coding, and electro-optic conversions for fiber based links.

Plesiochronous - two signals are plesiochronous if their corresponding significant instants occur at nominally the same rate, with variations in rate constrained to specified limits.

Point of Demarcation - the dividing line between a carrier and the customer premise that is governed by strict standards that define the characteristics of the equipment on each side of the demarcation. Equipment on one side of the point of demarcation is the responsibility of the customer. Equipment on the other side of the point of demarcation is the responsibility of the carrier.

Point-to-Multipoint Connection - a collection of associated ATM VC or VP links, with associated endpoint nodes, with the following properties:

1. One ATM link, called the Root Link, serves as the root in a simple tree topology. When the Root node sends information, all of the remaining nodes on the connection, called Leaf nodes, receive copies of the information.

2. Each of the Leaf Nodes on the connection can send information directly to the Root Node. The Root Node cannot distinguish which Leaf is sending information without additional (higher layer) information. (See the following note for Phase 1.)

3. The Leaf Nodes cannot communicate directly to each other with this connection type.

Note: Phase 1 signalling does not support traffic sent from a Leaf to the Root.

Point-to-Point Connection - a connection with only two endpoints.

Point-to-Point Protocol (PPP) - Provides a method for transmitting packets over serial point-to-point links.

Policing - the function that ensures that a network device does not accept traffic that exceeds the configured bandwidth of a connection.

Port Identifier - The identifier assigned by a logical node to represent the point of attachment of a link to that node.

Presentation Layer - Sixth layer of the OSI model, providing services to the application layer.

Primary Reference Source (PRS) - Equipment that provides a timing signal whose long-term accuracy is maintained at 1 x 10 -11 or better with verification to universal coordinated time (UTC) and whose timing signal is used as the basis of reference for the control of other clocks within a network.

Primitive - an abstract, implementation-independent interaction between a layer service user and a layer service provider.

Priority - the parameter of ATM connections that determines the order in which they are reduced from the peak cell rate to the sustained cell rate in times of congestion. Connections with lower priority (4 is low, 1 is high) are reduced first.

Private Branch Exchange (PBX) - a private phone system (switch) that connects to the public telephone network and offers in-house connectivity. To reach an outside line, the user must dial a digit like 8 or 9.

Private Network Node Interface or Private Network-to-Network Interface (PNNI) - a protocol that defines the interaction of private ATM switches or groups of private ATM switches

Programmable Read-Only Memory (PROM) - a chip-based information storage area that can be recorded by an operator but erased only through a physical process.

Protocol - a set of rules and formats (semantic and syntactic) that determines the communication behavior of layer entities in the performance of the layer functions.

Protocol Control Information - the information exchanged between corresponding entities using a lower layer connection to coordinate their joint operation.

Protocol Data Unit (PDU) - a unit of data specified in a layer protocol and consisting of protocol control information and layer user data.

Proxy - the process in which one system acts for another system to answer protocol requests.

Proxy Agent - an agent that queries on behalf of the manager, used to monitor objects that are not directly manageable.

Public Data Network (PDN) - a network designed primarily for data transmission and intended for sharing by many users from many organizations.

Pulse Code Modulation (PCM) - a modulation scheme that samples the information signals and transmits a series of coded pulses to represent the data.

Q.2931 - Derived from Q.93B, the narrowband ISDN signalling protocol, an ITU standard describing the signalling protocol to be used by switched virtual circuits on ATM LANs.

Quality of Service (QoS) - Quality of Service is defined on an end-to-end basis in terms of the following attributes of the end-to-end ATM connection:

Cell Loss Ratio
Cell Transfer Delay
Cell Delay Variation

Queuing Delay (QD) - refers to the delay imposed on a cell by its having to be buffered because of unavailability of resources to pass the cell onto the next network function or element. This buffering could be a result of oversubscription of a physical link, or due to a connection of higher priority or tighter service constraints getting the resource of the physical link.

Radio Frequency Interference (RFI) - the unintentional transmission of radio signals. Computer equipment and wiring can both generate and receive RFI.

Real-Time Clock - a clock that maintains the time of day, in contrast to a clock that is used to time the electrical pulses on a circuit.

Red Alarm - In T1, a red alarm is generated for a locally detected failure such as when a condition like OOF exists for 2.5 seconds, causing a CGA, (Carrier Group Alarm).

Reduced Instruction Set Computer (RISC) - a generic name for CPUs that use a simpler instruction set than more traditional designs.

Redundancy - In a data transmission, the fragments of characters and bits that can be eliminated with no loss of information.

Registration - The address registration function is the mechanism by which Clients provide address information to the LAN Emulation Server.

Relaying - a function of a layer by means of which a layer entity receives data from a corresponding entity and transmits it to another corresponding entity.

Request To Send (RTS) - an RS-232 modem interface signal (sent from the DTE to the modem on pin 4) which indicates that the DTE has data to transmit.

Requests For Comment (RFCs) - IETF documents suggesting protocols and policies of the Internet, inviting comments as to the quality and validity of those policies. These comments are collected and analyzed by the IETF in order to finalize Internet standards.

RFC1483 - Multiprotocol Encapsulation over ATM Adaptation Layer 5.
RFC1490 - Multiprotocol Interconnect over Frame Relay.
RFC1577 - Classical IP and ARP over ATM.
RFC1755 - ATM Signaling Support for IP over ATM.

Robbed-Bit Signaling - In T1, refers to the use of the least significant bit of every word of frames 6 and 12 (D4), or 6, 12, 18, and 24 (ESF) for signaling purposes.

Route Server - A physical device that runs one or more network layer routing protocols, and which uses a route query protocol in order to provide network layer routing forwarding descriptions to clients.

Router - a device that forwards traffic between networks or subnetworks based on network layer information.

Routing Domain (RD) - A group of topologically contiguous systems which are running one instance of routing.

Routing Information Protocol (RIP) - a distance vector-based protocol that provides a measure of distance, or hops, from a transmitting workstation to a receiving workstation.

Routing Protocol - A general term indicating a protocol run between routers and/or route servers in order to exchange information used to allow computation of routes. The result of the routing computation will be one or more forwarding descriptions.

SBus - hardware interface for add-in boards in later-version Sun 3 workstations.

Scalable Processor Architecture Reduced instruction set Computer (SPARC) - a powerful workstation similar to a reduced-instruction-set-computing (RISC) workstation.

Segment - a single ATM link or group of interconnected ATM links of an ATM connection.

Segmentation And Reassembly (SAR) - the SAR accepts PDUs from the CS and divides them into very small segments (44 bytes long). If the CS-PDU is less than 44 bytes, it is padded to 44 with zeroes. A two-byte header and trailer are added to this basic segment. The header identifies the message type (beginning, end, continuation, or single) and contains sequence numbering and message identification. The trailer gives the SAR-PDU payload length, exclusive of pad, and contains a CRC check to ensure the SAR-PDU integrity. The result is a 48-byte PDU that fits into the payload field of an ATM cell.

Selector (SEL) - A subfield carried in SETUP message part of ATM endpoint address Domain specific Part (DSP) defined by ISO 10589, not used for ATM network routing, used by ATM end systems only.

Semipermanent Connection - a connection established via a service order or via network management.

Serial Line IP (SLIP) - A protocol used to run IP over serial lines, such as telephone circuits or RS-232 cables, interconnecting two systems.

Service Access Point (SAP) - the point at which an entity of a layer provides services to its LM entity or to an entity of the next higher layer.

Service Data Unit (SDU) - a unit of interface information whose identity is preserved from one end of a layer connection to the other.

Service Specific Connection Oriented Protocol (SSCOP) - an adaptation layer protocol defined in ITU-T Specification: Q.2110.

Service Specific Convergence Sublayer (SSCS) - The portion of the convergence sublayer that is dependent upon the type of traffic that is being converted.

Session Layer - Layer 5 in the OSI model that is responsible for establishing and managing sessions between the application programs running in different nodes.

Severely Errored Seconds (SES) - a second during which more event errors have occurred than the SES threshold (normally 10-3).

Shaping Descriptor - *n* ordered pairs of GCRA parameters (I,L) used to define the negotiated traffic shape of an APP connection. The traffic shape refers to the load-balancing of a network, where load-balancing means configuring data flows to maximize network efficiency.

Shielded Pair - Two insulated wires in a cable wrapped with metallic braid or foil to prevent interference and provide noise free transmission.

Shielded Twisted Pair (STP) - two or more insulated wires, twisted together and then wrapped in a cable with metallic braid or foil to prevent interference and offer noise-free transmissions.

Signaling System No. 7 (SS7) - The SS7 protocol has been specified by ITU-T and is a protocol for interexchange signaling.

Simple and Efficient Adaptation Layer (SEAL) - also called AAL 5, this ATM adaptation layer assumes that higher layer processes will provide error recovery, thereby simplifying the SAR portion of the adaptation layer. Using this AAL type packs all 48 bytes of an ATM cell information field with data. It also assumes that only one message is crossing the UNI at a time. That is, multiple end-users at one location cannot interleave messages on the same VC, but must queue them for sequential transmission.

Simple Gateway Management Protocol (SGMP) - the predecessor to SNMP.

Simple Mail Transfer Protocol (SMTP) - the Internet electronic mail protocol used to transfer electronic mail between hosts.

Simple Network Management Protocol (SNMP) - the Internet standard protocol for managing nodes on an IP network.

Simple Protocol for ATM Network Signalling (SPANS) - FORE Systems' proprietary signalling protocol used for establishing SVCs between FORE Systems equipment.

Single Mode Fiber (SMF) - Fiber optic cable in which the signal or light propagates in a single mode or path. Since all light follows the same path or travels the same distance, a transmitted pulse is not dispersed and does not interfere with adjacent pulses. SMF fibers can support longer distances and are limited mainly by the amount of attenuation. Refer to MMF.

Small Computer Systems Interface (SCSI) - a standard for a controller bus that connects hardware devices to their controllers on a computer bus, typically used in small systems.

Smart PVC (SPVC) - a generic term for any communications medium which is permanently provisioned at the end points, but switched in the middle. In ATM, there are two kinds of SPVCs: smart permanent virtual path connections (SPVPCs) and smart permanent virtual channel connections (SPVCCs).

snmpd - an SMNP agent for a given adapter card.

Source - Part of communications system which transmits information.

Source Address (SA) - The address from which the message or data originated.

Source MAC Address (SA) - A six octet value uniquely identifying an end point and which is sent in an IEEE LAN frame header to indicate source of frame.

Source Traffic Descriptor - a set of traffic parameters belonging to the ATM Traffic Descriptor used during the connection set-up to capture the intrinsic traffic characteristics of the connection requested by the source.

Spanning Tree Protocol - provides loop-free topology in a network environment where there are redundant paths.

Static Route - a route that is entered manually into the routing table.

Statistical Multiplexing - a technique for allowing multiple channels and paths to share the same link, typified by the ability to give the bandwidth of a temporarily idle channel to another channel.

Stick and Click (SC) - Designation for an Optical Connector featuring a 2.5 mm physically contacting ferrule with a push-pull mating design. Commonly referred to as Structured Cabling, Structured Connectors or Stick and Click

Stick and Turn (ST) - A fiber-optic connector designed by AT&T which uses the bayonet style coupling rather than screw-on as the SMA uses. The ST is generally considered the eventual replacement for the SMA type connector.

Store-and-Forward - the technique of receiving a message, storing it until the proper outgoing line is available, then retransmitting it, with no direct connection between incoming and outgoing lines.

Straight Tip (ST) - see *Stick and Turn*.

Structured Cabling (SC) - see *Stick and Click*.

Structured Connectors (SC) - see *Stick and Click*.

Sublayer - a logical subdivision of a layer.

SubNetwork Access Protocol (SNAP) - a specially reserved variant of IEEE 802.2 encoding SNAP indicates to look further into the packet where it will fine a Type field.

Subscriber Network Interface (SNI) - the interface between an SMDS end user's CPE and the network directly serving the end user, supported by either a DS1 or DS3 access arrangement.

Super Frame (SF) - a term used to describe the repeating 12 D4 frame format that composes a standard (non-ESF) T1 service.

Super User - a login ID that allows unlimited access to the full range of a device's functionality, including especially the ability to reconfigure the device and set passwords.

Sustainable Cell Rate (SCR) - ATM Forum parameter defined for traffic management. For VBR connections, SCR determines the long-term average cell rate that can be transmitted.

Sustained Information Rate (SIR) - In ATM this refers to the long-term average data transmission rate across the User-to-Network Interface. In SMDS this refers to the committed information rate (similar to CIR for Frame Relay Service).

Switch - Equipment used to interconnect lines and trunks.

Switched Connection - A connection established via signaling.

Switched Multimegabit Data Service (SMDS) - a high-speed, datagram-based, public data network service expected to be widely used by telephone companies in their data networks.

Switched Virtual Channel Connection (SVCC) - A Switched VCC is one which is established and taken down dynamically through control signaling. A Virtual Channel Connection (VCC) is an ATM connection where switching is performed on the VPI/VCI fields of each cell.

Switched Virtual Circuit (or Channel) (SVC) - a channel established on demand by network signalling, used for information transport between two locations and lasting only for the duration of the transfer; the datacom equivalent of a dialed telephone call.

Switched Virtual Path Connection (SVPC) - a connection which is established and taken down dynamically through control signaling. A Virtual Path Connection (VPC) is an ATM connection where switching is performed on the VPI field only of each cell.

Switching System - A set of one or more systems that act together and appear as a single switch for the purposes of PNNI routing.

Symmetric Connection - a connection with the same bandwidth specified for both directions.

Synchronous - signals that are sourced from the same timing reference and hence are identical in frequency.

Synchronous Data Link Control (SDLC) - IBM's data link protocol used in SNA networks.

Synchronous Optical Network (SONET) - a body of standards that defines all aspects of transporting and managing digital traffic over optical facilities in the public network.

Synchronous Payload Envelope (SPE) - the payload field plus a little overhead of a basic SONET signal.

Synchronous Transfer Mode (STM) - a transport and switching method that depends on information occurring in regular, fixed patterns with respect to a reference such as a frame pattern.

Synchronous Transport Signal (STS) - a SONET electrical signal rate.

Systeme En Coleur Avec Memoire (SECAM) - Sequential and Memory Color Television - Started in France in the late 60s, and used by other countries with a political affiliation. This is. The B-Y and R-Y signals are transmitted on alternate lines modulated on an FM subcarrier. The memory is a one line delay line in the receiver to make both color difference signals available at the same time on all lines. Due to FM, the signal is robust in difficult terrain.

Systems Network Architecture (SNA) - a proprietary networking architecture used by IBM and IBM-compatible mainframe computers.

T1 - a specification for a transmission line. The specification details the input and output characteristics and the bandwidth. T1 lines run at 1.544 Mbps and provide for 24 data channels. In common usage, the term “T1” is used interchangeably with “DS1.”

T1 Link - A wideband digital carrier facility used for transmission of digitized voice, digital data, and digitized image traffic. This link is composed of two twisted-wire pairs that can carry 24 digital channels, each operating at 64K bps at the aggregate rate of 1.544M bps, full duplex. Also referred to as DS-1.

T3 - a specification for a transmission line, the equivalent of 28 T1 lines. T3 lines run at 44.736 Mbps. In common usage, the term “T3” is used interchangeably with “DS3.”

Tachometer - in *ForeView*, the tachometer shows the level of activity on a given port. The number in the tachometer shows the value of a chosen parameter in percentage, with a colored bar providing a semi-logarithmic representation of that percentage.

Tagged Cell Rate (TCR) - An ABR service parameter, TCR limits the rate at which a source may send out-of-rate forward RM-cells. TCR is a constant fixed at 10 cells / second.

Telephony - The conversion of voices and other sounds into electrical signals which are then transmitted by telecommunications media.

Telnet - a TCP / IP protocol that defines a client / server mechanism for emulating directly-connected terminal connections.

Terminal Equipment (TE) - Terminal equipment represents the endpoint of ATM connection(s) and termination of the various protocols within the connection(s).

Throughput - Measurement of the total useful information processed or communicated by a computer during a specified time period, i.e. packets per second.

Time Division Multiplexing (TDM) - a method of traditional digital multiplexing in which a signal occupies a fixed, repetitive time slot within a higher-rate signal.

Token Ring - a network access method in which the stations circulate a token. Stations with data to send must have the token to transmit their data.

topology - a program that displays the topology of a FORE Systems ATM network. An updated topology can be periodically re-displayed by use of the interval command option.

Traffic - the calls being sent and received over a communications network. Also, the packets that are sent on a data network.

Traffic Management (TM) - The traffic control and congestion control procedures for ATM. ATM layer traffic control refers to the set of actions taken by the network to avoid congestion conditions. ATM layer congestion control refers to the set of actions taken by the network to minimize the intensity, spread and duration of congestion. The following functions form a framework for managing and controlling traffic and congestion in ATM networks and may be used in appropriate combinations:

Connection Admission Control
Feedback Control
Usage Parameter Control
Priority Control
Traffic Shaping
Network Resource Management
Frame Discard
ABR Flow Control

Traffic Parameter - A parameter for specifying a particular traffic aspect of a connection.

Trailer - the protocol control information located at the end of a PDU.

Transit Delay - the time difference between the instant at which the first bit of a PDU crosses one designated boundary, and the instant at which the last bit of the same PDU crosses a second designated boundary.

Transmission Control Protocol (TCP) - a specification for software that bundles and unbundles sent and received data into packets, manages the transmission of packets on a network, and checks for errors.

Transmission Control Protocol/Internet Protocol (TCP/IP) - a set of communications protocols that has evolved since the late 1970s, when it was first developed by the Department of Defense. Because programs supporting these protocols are available on so many different computer systems, they have become an excellent way to connect different types of computers over networks.

Transmission Convergence (TC) - generates and receives transmission frames and is responsible for all overhead associated with the transmission frame. The TC sublayer packages cells into the transmission frame.

Transmission Convergence Sublayer (TCS) - This is part of the ATM physical layer that defines how cells will be transmitted by the actual physical layer.

Transparent Asynchronous Transmitter/Receiver Interface (TAXI) - Encoding scheme used for FDDI LANs as well as for ATM; supports speed typical of 100 Mbps over multimode fiber.

Transport Layer - Layer Four of the OSI reference model that is responsible for maintaining reliable end-to-end communications across the network.

trap - a program interrupt mechanism that automatically updates the state of the network to remote network management hosts. The SNMP agent on the switch supports these SNMP traps.

Trivial File Transfer Protocol (TFTP) - Part of IP, a simplified version of FTP that allows files to be transferred from one computer to another over a network.

Twisted Pair - Insulated wire in which pairs are twisted together. Commonly used for telephone connections, and LANs because it is inexpensive.

Unassigned Cells - a generated cell identified by a standardized virtual path identifier (VPI) and virtual channel identifier (VCI) value, which does not carry information from an application using the ATM Layer service.

Unavailable Seconds (UAS) - a measurement of signal quality. Unavailable seconds start accruing when ten consecutive severely errored seconds occur.

UNI 3.0/3.1 - the User-to-Network Interface standard set forth by the ATM Forum that defines how private customer premise equipment interacts with private ATM switches.

Unicasting - The transmit operation of a single PDU by a source interface where the PDU reaches a single destination.

Universal Test & Operations Interface for ATM (UTOPIA) - Refers to an electrical interface between the TC and PMD sublayers of the PHY layer.

Unshielded Twisted Pair (UTP) - a cable that consists of two or more insulated conductors in which each pair of conductors are twisted around each other. There is no external protection and noise resistance comes solely from the twists.

Unspecified Bit Rate (UBR) - a type of traffic that is not considered time-critical (e.g., ARP messages, pure data), allocated whatever bandwidth is available at any given time. UBR traffic is given a “best effort” priority in an ATM network with no guarantee of successful transmission.

Uplink - Represents the connectivity from a border node to an upnode.

Usage Parameter Control (UPC) - mechanism that ensures that traffic on a given connection does not exceed the contracted bandwidth of the connection, responsible for policing or enforcement. UPC is sometimes confused with congestion management (see *congestion management*).

User Datagram Protocol (UDP) - the TCP/IP transaction protocol used for applications such as remote network management and name-service access; this lets users assign a name, such as “RVAX*2,S,” to a physical or numbered address.

User-to-Network Interface (UNI) - the physical and electrical demarcation point between the user and the public network service provider.

V.35 - ITU-T standard describing a synchronous, physical layer protocol used for communications between a network access device and a packet network. V.35 is most commonly used in the United States and Europe, and is recommended for speeds up to 48 Kbps.

Variable Bit Rate (VBR) - a type of traffic that, when sent over a network, is tolerant of delays and changes in the amount of bandwidth it is allocated (e.g., data applications).

Virtual Channel (or Circuit) (VC) - a communications path between two nodes identified by label rather than fixed physical path.

Virtual Channel Connection (VCC) - a unidirectional concatenation of VCLs that extends between the points where the ATM service users access the ATM Layer. The points at which the ATM cell payload is passed to, or received from, the users of the ATM Layer (i.e., a higher layer or ATMM-entity) for processing signify the endpoints of a VCC.

Virtual Channel Identifier (VCI) - the address or label of a VC; a value stored in a field in the ATM cell header that identifies an individual virtual channel to which the cell belongs. VCI values may be different for each data link hop of an ATM virtual connection.

Virtual Channel Link (VCL) - a means of unidirectional transport of ATM cells between the point where a VCI value is assigned and the point where that value is translated or removed.

Virtual Channel Switch - a network element that connects VCLs. It terminates VPCs and translates VCI values. The Virtual Channel Switch is directed by Control Plane functions and relays the cells of a VC.

Virtual Connection - an endpoint-to-endpoint connection in an ATM network. A virtual connection can be either a virtual path or a virtual channel.

Virtual Local Area Network (VLAN) - Work stations connected to an intelligent device which provides the capabilities to define LAN membership.

Virtual Network Software (VINES) - Banyan's network operating system based on UNIX and its protocols.

Virtual Path (VP) - a unidirectional logical association or bundle of VCs.

Virtual Path Connection (VPC) - a concatenation of VPLs between virtual path terminators (VPTs). VPCs are unidirectional.

Virtual Path Identifier (VPI) - the address or label of a particular VP; a value stored in a field in the ATM cell header that identifies an individual virtual path to which the cell belongs. A virtual path may comprise multiple virtual channels.

Virtual Path Link (VPL) - a means of unidirectional transport of ATM cells between the point where a VPI value is assigned and the point where that value is translated or removed.

Virtual Path Switch - a network element that connects VPLs, it translates VPI (not VCI) values and is directed by Control Plane functions. The Virtual Path Switch relays the cells of a Virtual Path.

Virtual Path Terminator (VPT) - a system that unbundles the VCs of a VP for independent processing of each VC.

Virtual Private Data Network (VPDN) - a private data communications network built on public switching and transport facilities rather than dedicated leased facilities such as T1s.

Virtual Private Network (VPN) - a private voice communications network built on public switching and transport facilities rather than dedicated leased facilities such as T1s.

Virtual Source/Virtual Destination (VS/VD) - An ABR connection may be divided into two or more separately controlled ABR segments. Each ABR control segment, except the first, is sourced by a virtual source. A virtual source implements the behavior of an ABR source endpoint. Backwards RM-cells received by a virtual source are removed from the connection. Each ABR control segment, except the last, is terminated by a virtual destination. A virtual destination assumes the behavior of an ABR destination endpoint. Forward RM-cells received by a virtual destination are turned around and not forwarded to the next segment of the connection.

Virtual Tributary (VT) - a structure used to carry payloads such as DS1s that run at significantly lower rates than STS-1s.

Warm Start Trap - an SNMP trap which indicates that SNMP alarm messages or agents have been enabled.

Wide-Area Network (WAN) - a network that covers a large geographic area.

Wideband Channel - Communications channel with more capacity (19.2K bps) than the standard capacity of a voice grade line.

X.21 - ITU-T standard for serial communications over synchronous digital lines. The X.21 protocol is used primarily in Europe and Japan.

X.25 - a well-established data switching and transport method that relies on a significant amount of processing to ensure reliable transport over metallic media.

Yellow Alarm - An alarm signal sent back toward the source of a failed signal due to the presence of an AIS (may be used by APS equipment to initiate switching).

Zero Byte Time Slot Interchange (ZBTSI) - A technique used with the T carrier extended superframe format (ESF) in which an area in the ESF frame carries information about the location of all-zero bytes (eight consecutive “0”s) within the data stream.

Zero Code Suppression - The insertion of a “1” bit to prevent the transmission of eight or more consecutive “0” bits. Used primarily with T1 and related digital telephone company facilities, which require a minimum “1’s density” in order to keep the individual subchannels of a multiplexed, high speed facility active.

Zero-Bit Insertion - A technique used to achieve transparency in bit-oriented protocols. A zero is inserted into sequences of one bits that cause false flag direction.

Index

A

adapter-switch, configuration 7-2
address mapping 4-3
API 9-1
Application Programming Interface 9-1
ARP reply 5-8
ARP request 5-8
ARP restrictions 5-9
ARP server 5-6
asxmon 8-2
ATM Forum LAN Emulation Over ATM Version 1.0 1-2
ATM, definition 1-1
atmarp 8-2
atmconfig 8-2
ATM-only 4-6
atmstat 8-2, 10-21
automatic failover 4-13

B

back-to-back 7-1
Berkeley socket interface 9-1
Broadcast and Unknown Server 6-3
broadcast packets 1-5
buffer space 3-41
BUS 6-3

C

cchan 8-2
Classical IP ATM network 5-1
Classical IP Operation 5-8
Classical IP PVC 5-10
Classical IP virtual network interface 5-2
Classical IP, unsupported 5-9
configuration
    adapter to other vendor 7-3
    emulated LAN, example 1-3
configuration, adapter-switch 7-2
connection
    Configuration-Direct 6-4
    Control-Direct 6-4
    Control-Distribute 6-4
    Data-Direct 6-4
    Multicast-Forward 6-4
    Multicast-Send 6-4
connection process, LEC 1-4
cpath 8-2
cport 8-2

D

debugging 5-11
Defining an ELAN 6-20
disable SPANS signalling 4-8
display current configuration 4-8
dynamic IP 4-7

E

ELAN 6-1
    configuring 6-8
    manual configuration 6-16
elarp 8-2
elconfig 8-3

Emulated LAN 6-1
Address Resolution 6-6
Components 6-2
Data Transfer 6-7
Initialization 6-6
Operation 6-4
Registration 6-6
emulated LAN (ELAN)
components of 1-2
example configuration 1-3
failover mechanism 1-5
illustration 1-3
running multiple 1-5
enable SPANS signalling 4-8
enable UNI 3.0 signalling 4-8
enable UNI 3.1 signalling 4-8
example ELAN configuration 1-3

F

failover ELAN 1-5
FDDI networks 1-5
fore_reconfig 3-40
ftp 4-5

G

general installation 2-1

H

halt system 2-2
hardware overview 1-8
hardware requirements 1-11
host NSAP address 5-6

I

ifconfig 4-2
illustration
emulated LAN, example 1-3
ILMI 5-4
ILMI support 5-5
ILMI, address registration 5-5
incoming IP PVC 4-11
initialization process, LEC 1-4
installation
Solaris Device Driver 3-25
SunOS Software 3-4
installation requirements
Solaris 3-1
SunOS 3-1
Interim Local Management Interface 5-4
IP address 7-2
IP address, reboot 4-3
IP addressing 4-4

K

kernel configuration 3-1
kernel verification 3-24

L

LAN Emulation Client 6-3
LAN emulation client (LEC)
connection process 1-4
initialization process 1-4
LAN Emulation Configuration Server 6-3
LAN emulation overview 1-2
LAN Emulation Server 6-3
LAN emulation server (LES), loss of 1-5
LAN Emulation Services 6-2
lane 8-3
le 8-3
LEC 6-3
LECS 6-3
lecs 8-3
LECS Configuration File
Sample 6-24
LECS configuration file
building an 6-17
syntax 6-18

LECS Control Parameters 6-23
lecs.cfg 8-3
LED indicators A-1
legacy LAN 5-1
leq 8-4
LES 6-3
LIS 5-2
Logical IP Subnet (LIS) 5-2
looptest 8-2

M

multicast packets 1-5
multicast PVC 4-13
multicasting 4-12
multi-homing 4-5

N

network interface configuration 4-1
network topology 7-1
no Classical IP support 5-9
NSAP address 5-4

O

outgoing IP PVC 4-10
overview of LAN emulation 1-2

P

post-installation
    test 2-5
PVC 7-3
PVC verification 4-12

Q

Q.2931 5-1

R

reboot
    IP address 4-3
receive buffer 3-41
reconfigure 3-40
RFC-1577 5-2

S

send buffer 3-41
snmpd 8-2
software installation 3-1
software installation requirements 3-1
software overview 1-9
SPANS 7-3
SPANS interface 5-3
static IP routing 4-7
SunOS kernel configuration 3-6
support iii

T

TCP/IP 4-4
technical support iii
test
    AAL* error 10-13
    atmstat 10-12
    carrier 10-7
    driver 10-5
    firmware 10-4
    hardware 10-4
    looptest 10-3
    network connectivity 10-10
    no cell transmission 10-13
    no cells received 10-12
    physical link 10-7
    self-test 10-4
    VPI/VCI error 10-13
Token Ring networks 1-5
topology 8-2
Troubleshooting
    adinfo 10-21
    atmstat 10-21
    ifconfig 10-20
    netstat 10-20
    uname 10-20
troubleshooting 10-1

U

unpacking 1-12

V

validate SVC 5-8
verify PVC 4-12

W

well-known address, LECS 1-4